EXPOSITION LIGHT RAIL TRANSIT PROJECT- PHASE 2, DESIGN BUILD CONTRACT NO. XP8902-002

CDRL SUBMITTAL 01102-3.3.2.25A.00 - FINAL COLORADO /4TH STREET STATION
APPROVED FOR CONSTRUCTION - MAY 30, 2013

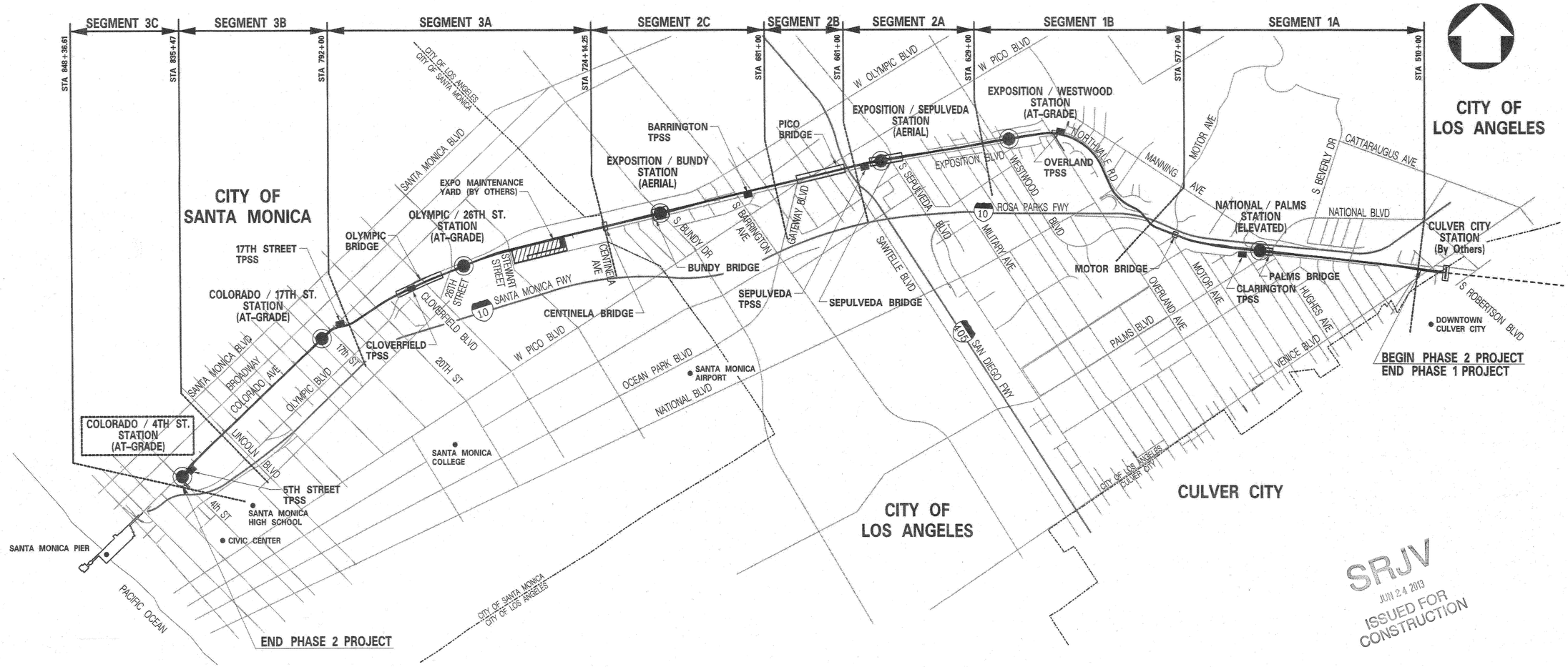

SRJV
JUN 24 2013
ISSUED FOR CONSTRUCTION

EXPOSITION LIGHT RAIL TRANSIT PROJECT

EXPO SKANSKA RADOS
444 South Flower Street
Suite 2200
Los Angeles, CA 90071
TEL (213) 443-7463
FAX (213) 362-9481

PARSONS BRINCKERHOFF

APPROVED: Burt S. Jones — ENGINEERING MANAGER — DATE 5/30/13
APPROVED: Kurt L. Thomas — DESIGN BUILD MANAGER — DATE 5/30/13

EXPOSITION METRO LINE CONSTRUCTION AUTHORITY
Expo

Exposition Construction Authority
Approved for Construction
Drawings - AFC
JUN 21 2013

APPROVED: Matt Rogers — AUTHORITY - PROJECT MANAGER — DATE 6/21/13

CURRENT STATUS

C:\Expo2\general\Sta 07 4th Strett Station\expo2-g-S7-000.plg
Plot Driver=EXPO2-Full-BW-pdf.plt
Pentable=EXPO2-PENTABLE.tbl
RodriguezD
5:56:11 PM 5/29/2013

REV NO	SHT NO	DWG NO	DWG TITLE
			GENERAL DRAWINGS
0	-	G-S7-000	COVER SHEET
0	-	G-S7-001	GENERAL COLORADO / 4TH STREET STATION INDEX OF DRAWINGS SHEET 1 OF 2
0	-	G-S7-002	GENERAL COLORADO / 4TH STREET STATION INDEX OF DRAWINGS SHEET 2 OF 2
			STATION CIVIL PLAN
0	-	CG-3C-301	COLORADO/4TH ST STATION CIVIL SITE PLAN
			STORM DRAIN
0	-	SDG-302	STORM DRAIN - SEGMENT 3C 4TH STREET STATION CONSTRUCTION NOTES
0	-	CD-3C-305	STORM DRAIN, SEG 3C 4TH STREET STATION PLAN
0	-	SDP-3C-304	STORM DRAIN, SEG 3C 4TH STREET STATION PROFILE
			ARCHITECTURAL
0	-	A-S7-001	COLORADO/4TH STREET STATION ABBREVIATIONS, SYMBOLS, GENERAL NOTES AND VICINITY MAP
0	-	A-S7-002	COLORADO/4TH STREET STATION GREEN BUILDING CODE COMPLIANCE
0	-	A-S7-101	COLORADO/4TH STREET STATION SITE PLAN
0	-	A-S7-102	COLORADO/4TH STREET STATION SITE PLAN EXITING AND ACCESS
0	-	A-S7-111	COLORADO/4TH STREET STATION FLOOR PLAN PLATFORM A
0	-	A-S7-112	COLORADO/4TH STREET STATION FLOOR PLAN PLATFORM B
0	-	A-S7-113	COLORADO/4TH STREET STATION ENLARGED TICKETING AREA PLANS, SECTIONS AND ELEVATIONS
0	-	A-S7-121	COLORADO/4TH STREET STATION CANOPY PLANS AND ELEVATIONS
0	-	A-S7-122	COLORADO/4TH STREET STATION CANOPY ORIENTATION LAYOUTS
0	-	A-S7-125	COLORADO/4TH STREET STATION RAIN CANOPY PLANS SHEET 1 OF 2
0	-	A-S7-126	COLORADO/4TH STREET STATION RAIN CANOPY PLANS SHEET 2 OF 2
0	-	A-S7-127	COLORADO/4TH STREET STATION RAIN CANOPY TYPICAL DETAILS
0	-	A-S7-130	COLORADO/4TH STREET STATION SITE PAVING PLAN
0	-	A-S7-131	COLORADO/4TH STREET STATION PAVING PLAN PLATFORM A
0	-	A-S7-132	COLORADO/4TH STREET STATION PAVING PLAN PLATFORM B
0	-	A-S7-133	COLORADO/4TH STREET STATION PAVING PLAN UPPER PLAZA
0	-	A-S7-134	COLORADO/4TH STREET STATION PAVING PLAN ACCESSIBLE RAMPS
0	-	A-S7-141	COLORADO/4TH STREET STATION REFLECTED CEILING PLAN PLATFORM A
0	-	A-S7-142	COLORADO/4TH STREET STATION REFLECTED CEILING PLAN PLATFORM B
0	-	A-S7-151	COLORADO/4TH STREET STATION ROOF PLAN PLATFORM A
0	-	A-S7-152	COLORADO/4TH STREET STATION ROOF PLAN PLATFORM B
0	-	A-S7-201	COLORADO/4TH STREET STATION ELEVATION PLATFORM A
0	-	A-S7-202	COLORADO/4TH STREET STATION ELEVATION PLATFORM B
0	-	A-S7-203	COLORADO/4TH STREET STATION ELEVATIONS SHEET 1 OF 3
0	-	A-S7-204	COLORADO/4TH STREET STATION ELEVATIONS SHEET 2 OF 3
0	-	A-S7-205	COLORADO/4TH STREET STATION ELEVATIONS SHEET 3 OF 3
0	-	A-S7-221	COLORADO/4TH STREET STATION SECTIONS SHEET 1 OF 3
0	-	A-S7-222	COLORADO/4TH STREET STATION SECTIONS SHEET 2 OF 3
0	-	A-S7-223	COLORADO/4TH STREET STATION SECTIONS SHEET 3 OF 3
0	-	A-S7-331	COLORADO/4TH STREET STATION ACCESSIBLE RAMP #1
0	-	A-S7-332	COLORADO/4TH STREET STATION ACCESSIBLE RAMP #2
0	-	A-S7-333	COLORADO/4TH STREET STATION ENTRANCE STAIRS
0	-	A-S7-334	COLORADO/4TH STREET STATION PLAZA LEVEL HANDRAIL AND GUARDRAIL DETAILS
0	-	A-S7-335	COLORADO/4TH STREET STATION STAIRWAY AND EMERGENCY GATE DETAILS
0	-	A-S7-401	COLORADO/4TH STREET STATION COMMUNICATIONS/SIGNAL BUILDING ENLARGED PLANS AND DOOR SCHEDULE
0	-	A-S7-402	COLORADO/4TH STREET STATION COMMUNICATIONS/SIGNAL BUILDING ELEVATIONS AND SECTIONS
0	-	A-S7-411	COLORADO/4TH STREET STATION TOS BOOTH PLANS, SECTIONS, ELEVATIONS AND WINDOW SCHEDULE
0	-	A-S7-412	COLORADO/4TH STREET STATION TOS BOOTH INTERIOR ELEVATIONS AND SECTIONS
0	-	A-S7-413	COLORADO/4TH STREET STATION TOS BOOTH ENLARGED TOILET ROOM PLAN AND INTERIOR ELEVATIONS
0	-	A-S7-414	COLORADO/4TH STREET STATION TOS BOOTH DETAILS
0	-	A-S7-415	COLORADO/4TH STREET STATION TOS BOOTH ACCESSIBLE DETAILS
0	-	A-S7-512	COLORADO/4TH STREET STATION PLATFORM PAVER DETAILS
0	-	A-S7-513	COLORADO/4TH STREET STATION MISCELLANEOUS STAION DETAILS
0	-	A-A-611	COMMON STATION DETAILS COMMUNICATIONS/SIGNAL BUILDING DETAILS SHEET 1 OF 2
0	-	A-A-612	COMMON STATION DETAILS COMMUNICATIONS/SIGNAL BUILDING DETAILS SHEET 2 OF 2
0	-	A-A-620	COMMON STATION DETAILS SIGNAGE/SYSTEMS MODULE, VMS PTZ CCTV AND SIGNAGE
0	-	A-A-621	COMMON STATION DETAILS STATION BENCHES PLANS, ELEVATIONS AND DETAILS
0	-	A-A-622	COMMON STATION DETAILS SPEAKER AND CCTV MOUNTING DETAILS
0	-	A-A-623	COMMON STATION DETAILS SPEAKER MOUNTING DETAILS

REV NO	SHT NO	DWG NO	DWG TITLE
			ARCHITECTURAL (CONT)
0	-	A-A-625	COMMON STATION DETAILS METAL GATEWAY ARCHES PLANS,SECTIONS,ELEVATIONS,DETAILS
0	-	A-A-629	COMMON STATION DETAILS HANDRAIL LED DRIVER DETAILS
0	-	A-A-630	COMMON STATION DETAILS HANDRAIL AND GUARDRAIL DETAILS
0	-	A-A-631	COMMON STATION DETAILS STAIRWAY AND EMERGENCY GATE DETAILS
0	-	A-A-632	COMMON STATION DETAILS MISC PLATFORM DETAILS
0	-	A-A-636	COMMON STATION DETAILS SITE DETAILS
0	-	A-A-640	COMMON STATION DETAILS DOOR DETAILS
0	-	A-A-650	COMMON STATION DETAILS METRO GRAND PYLON DETAILS
0	-	A-A-651	COMMON STATION DETAILS MAP CASE DETAILS SHEET 1 OF 3
0	-	A-A-652	COMMON STATION DETAILS MAP CASE DETAILS SHEET 2 OF 3
0	-	A-A-653	COMMON STATION DETAILS MAP CASE DETAILS SHEET 3 OF 3
0	-	A-A-654	COMMON STATION DETAILS TELEPHONE AND PTEL DETAILS
0	-	A-A-660	COMMON STATION DETAILS FINISH SCHEDULE
0	-	A-A-670	COMMON STATION DETAILS SPECIALTY PAVERS LAYOUT
0	-	A-A-691	COMMON STATION DETAILS RAIN CANOPY PANEL PERFORATIONS LAYOUT PLAN TICKETING AREA
0	-	A-A-692	COMMON STATION DETAILS RAIN CANOPY PANEL PERFORATIONS LAYOUT PLAN CENTER PLATFORM
0	-	A-A-695	COMMON STATION DETAILS CANOPY ROOF PANEL PERFORATIONS LAYOUT PLAN ORIENTATION 1
0	-	A-A-696	COMMON STATION DETAILS CANOPY ROOF PANEL PERFORATIONS LAYOUT PLAN ORIENTATION 2
0	-	A-A-697	COMMON STATION DETAILS CANOPY ROOF PANEL PERFORATIONS LAYOUT PLAN ORIENTATION 3
0	-	A-A-698	COMMON STATION DETAILS CANOPY ROOF PANEL PERFORATIONS LAYOUT PLAN ORIENTATION 4
0	-	A-A-699	COLORADO/4TH STREET STATION TICKETING AREA RAIN CANOPY PHOTO PERFORATIONS LAYOUT PLAN
			STATION STRUCTURE
0	-	S-S7-001	COLORADO/4TH STREET STATION STRUCTURAL GENERAL NOTES AND ABBREVIATIONS
0	-	S-S7-011	COLORADO/4TH STREET STATION STRUCTURAL TYPICAL DETAILS
0	-	S-S7-012	COLORADO/4TH STREET STATION STRUCTURAL TYPICAL DETAILS
0	-	S-S7-013	COLORADO/4TH STREET STATION STRUCTURAL TYPICAL DETAILS
0	-	S-S7-014	COLORADO/4TH STREET STATION STRUCTURAL TYPICAL DETAILS
0	-	S-S7-100	COLORADO/4TH STREET STATION STRUCTURAL SITE PLAN
0	-	S-S7-101	COLORADO/4TH STREET STATION STRUCTURAL FOUNDATION PLAN PLATFORM A
0	-	S-S7-102	COLORADO/4TH STREET STATION STRUCTURAL FOUNDATION PLAN PLATFORM B
0	-	S-S7-103	COLORADO/4TH STREET STATION STRUCTURAL ENLARGED TICKETING AREA AND RAMP PLANS
0	-	S-S7-104	COLORADO/4TH STREET STATION STRUCTURAL ENLARGED TICKETING AREA AND RAMP PLANS
0	-	S-S7-111	COLORADO/4TH STREET STATION STRUCTURAL PLATFORM PLAN PLATFORM A
0	-	S-S7-112	COLORADO/4TH STREET STATION STRUCTURAL PLATFORM PLAN PLATFORM B
0	-	S-S7-121	COLORADO/4TH STREET STATION STRUCTURAL CANOPY FRAMING PLAN PLATFORM A
0	-	S-S7-122	COLORADO/4TH STREET STATION STRUCTURAL CANOPY FRAMING PLAN PLATFORM B
0	-	S-S7-123	COLORADO/4TH STREET STATION STRUCTURAL RAIN CANOPY PLAN AND SECTIONS
0	-	S-S7-124	COLORADO/4TH STREET STATION STRUCTURAL TICKETING PLAN AND ELEVATIONS
0	-	S-S7-125	COLORADO/4TH STREET STATION STRUCTURAL TICKETING PLAN AND ELEVATIONS
0	-	S-S7-126	COLORADO/4TH STREET STATION STRUCTURAL RAIN PROTECTED SEGMENT SECTIONS
0	-	S-S7-201	COLORADO/4TH STREET STATION STRUCTURAL WALL ELEVATIONS
0	-	S-S7-202	COLORADO/4TH STREET STATION STRUCTURAL WALL ELEVATIONS
0	-	S-S7-203	COLORADO/4TH STREET STATION STRUCTURAL WALL ELEVATIONS
0	-	S-S7-211	COLORADO/4TH STREET STATION STRUCTURAL RETAINING WALL SECTIONS
0	-	S-S7-212	COLORADO/4TH STREET STATION STRUCTURAL RETAINING WALL SECTIONS
0	-	S-S7-213	COLORADO/4TH STREET STATION STRUCTURAL RETAINING WALL SECTIONS
0	-	S-S7-214	COLORADO/4TH STREET STATION STRUCTURAL RETAINING WALL SECTIONS
0	-	S-S7-215	COLORADO/4TH STREET STATION STRUCTURAL RETAINING WALL SECTIONS
0	-	S-S7-221	COLORADO/4TH STREET STATION STRUCTURAL STAIR SECTIONS
0	-	S-S7-401	COLORADO/4TH STREET STATION STRUCTURAL COMMUNICATIONS/SIGNAL BUILDING PLAN AND SECTIONS
0	-	S-S7-411	COLORADO/4TH STREET STATION STRUCTURAL ENLARGED TOS BOOTH PLAN, SECTIONS AND ELEVATIONS
0	-	S-S7-601	COLORADO/4TH STREET STATION STRUCTURAL PLATFORM DETAILS
0	-	S-S7-602	COLORADO/4TH STREET STATION STRUCTURAL PLATFORM DETAILS
0	-	S-S7-603	COLORADO/4TH STREET STATION STRUCTURAL PLATFORM DETAILS
0	-	S-S7-611	COLORADO/4TH STREET STATION STRUCTURAL CANOPY DETAILS
0	-	S-S7-612	COLORADO/4TH STREET STATION STRUCTURAL CANOPY DETAILS
0	-	S-S7-613	COLORADO/4TH STREET STATION STRUCTURAL RAIN CANOPY DETAILS
0	-	S-S7-614	COLORADO/4TH STREET STATION STRUCTURAL CANOPY DETAILS
0	-	S-S7-621	COLORADO/4TH STREET STATION STRUCTURAL TICKETING AREA SECTIONS AND DETAILS
0	-	S-S7-631	COLORADO/4TH STREET STATION STRUCTURAL METAL GATEWAY ARCH AND PLATFORM SECTIONS AND DETAILS
0	-	S-S7-641	COLORADO/4TH STREET STATION STRUCTURAL COMMUNICATIONS/SIGNAL BUILDING SECTIONS AND DETAILS
0	-	S-S7-642	COLORADO/4TH STREET STATION STRUCTURAL COMMUNICATIONS/SIGNAL BUILDING SECTIONS AND DETAILS
0	-	S-S7-651	COLORADO/4TH STREET STATION STRUCTURAL MISCELLANEOUS DETAILS

SRJV
JUN 24 2013
ISSUED FOR CONSTRUCTION

REV	DATE	BY	APP	REG NO	EXPIRES	SEAL HOLDER	DESCRIPTION
0	5/30/13	DR	PWT	C43086	03/31/14	PETER W. TUCCILLO	APPROVED FOR CONSTRUCTION

DESIGNED BY D. RODRIGUEZ
DRAWN BY R. JONES
CHECKED BY P. TUCCILLO
IN CHARGE P. TUCCILLO
DATE 5/30/13

REGISTERED PROFESSIONAL ENGINEER PETER W. TUCCILLO No. C43086 Exp. 03-31-14 CIVIL STATE OF CALIFORNIA

Exposition Metro Line Construction Authority
Expo
Exposition Construction Authority Approved for Construction Drawings - AFC
JUN 21 2013

EXPO SKANSKA RADOS
444 South Flower Street
Suite 2200
Los Angeles, CA 90071
TEL (213) 443-7463
FAX (213) 362-9481

PARSONS BRINCKERHOFF
CURRENT STATUS

EXPOSITION LRT PROJECT- PHASE 2
GENERAL
COLORADO / 4TH ST STATION
INDEX OF DRAWINGS
SHEET 1 OF 2

CONTRACT NO XP8902-002
DRAWING NO G-S7-001
REV 0
SCALE NONE
SHEET NO

C:\Expo2\general\Sta 07 4th Strett Station\expo2-g-S7-001.plg 5/29/2013 5:56:11 PM RodriguezD

Plot Driver=EXPO2-Full-BW-pdf.plt Pentable=EXPO2-PENTABLE.tbl

REV NO	SHT NO	DWG NO	DWG TITLE
			PLUMBING
0	-	PL-CB-001	PLUMBING COMMON FOR 4TH ST STATION ABBREVIATION, LEGEND, SYMBOLS, SCHEDULES AND GENERAL NOTES
0	-	PL-CB-002	PLUMBING COMMON FOR 4TH ST STATION DETAILS
0	-	PL-S7-101	COLORADO/4TH STREET STATION SITE PLUMBING PLANS
0	-	PL-S7-111	COLORADO/4TH STREET STATION PLATFORM A PLUMBING PLAN
0	-	PL-S7-112	COLORADO/4TH STREET STATION PLATFORM B PLUMBING PLAN
			FIRE PROTECTION
0	-	FP-C-001	FIRE PROTECTION COMMON ABBREVIATION, LEGEND, SYMBOLS AND GENERAL NOTES
0	-	FP-C-002	FIRE PROTECTION COMMON DETAILS
0	-	FP-S7-101	COLORADO/4TH STREET STATION FIRE PROTECTION PLANS
			MECHANICAL
0	-	M-CB-001	MECHANICAL COMMON FOR 4TH ST STATION ABBREVIATIONS, SYMBOLS, GENERAL NOTES & SEQUENCE OF OPERATIONS
0	-	M-CB-002	MECHANICAL COMMON FOR 4TH ST STATION SCHEDULES
0	-	M-C-003	MECHANICAL COMMON DETAILS
0	-	M-S7-101	COLORADO/4TH STREET STATION HVAC PLANS
			ELECTRICAL
0	-	E-C-001	COMMON ELECTRICAL GENERAL NOTES, SYMBOLS AND ABBREVIATIONS
0	-	E-C-002	COMMON ELECTRICAL LIGHT FIXTURE SCHEDULE
0	-	E-C-003	COMMON ELECTRICAL LIGHTING & EQUIP. INSTALLATION SYMBOLS & GENERAL NOTES
0	-	E-C-004	COMMON ELECTRICAL ELECTRICAL DETAILS
0	-	E-C-007	COMMON ELECTRICAL ELECTRICAL DETAILS
0	-	E-C-013	COMMON ELECTRICAL LIGHTING DETAILS RAIN SHIELDS
0	-	E-S7-001	COLORADO/4TH STREET STATION SITE PLAN
0	-	E-S7-002	COLORADO/4TH STREET STATION TITLE 24 INDOOR LIGHTING SHEET 1 OF 5
0	-	E-S7-003	COLORADO/4TH STREET STATION TITLE 24 INDOOR LIGHTING SHEET 2 OF 5
0	-	E-S7-004	COLORADO/4TH STREET STATION TITLE 24 OUTDOOR LIGHTING SHEET 3 OF 5
0	-	E-S7-005	COLORADO/4TH STREET STATION TITLE 24 OUTDOOR LIGHTING SHEET 4 OF 5
0	-	E-S7-006	COLORADO/4TH STREET STATION TITLE 24 SIGN LIGHTING SHEET 5 OF 5
0	-	E-S7-010	COLORADO/4TH STREET STATION ELECTRICAL SINGLE LINE DIAGRAM
0	-	E-S7-011	COLORADO/4TH STREET STATION FEEDER SCHEDULE AND PANEL SCHEDULE
0	-	E-S7-012	COLORADO/4TH STREET STATION PANEL SCHEDULE
0	-	E-S7-013	COLORADO/4TH STREET STATION PANEL SCHEDULE
0	-	E-S7-014	COLORADO/4TH STREET STATION EMBEDDED CONDUITS & DUCTS CONDUIT SIZE AND WIRE FILL CALCULATIONS
0	-	E-S7-111	COLORADO/4TH STREET STATION PLATFORM A LIGHTING PLAN
0	-	E-S7-112	COLORADO/4TH STREET STATION PLATFORM B LIGHTING PLAN
0	-	E-S7-113	COLORADO/4TH STREET STATION PLATFORM A GROUNDING & POWER PLAN
0	-	E-S7-114	COLORADO/4TH STREET STATION PLATFORM B GROUNDING & POWER PLAN
0	-	E-S7-115	COLORADO/4TH STREET STATION PLATFORM A COMMUNICATION & UFS PLAN
0	-	E-S7-116	COLORADO/4TH STREET STATION PLATFORM B COMMUNICATION & UFS PLAN
0	-	E-S7-117	COLORADO/4TH STREET STATION TICKETING AREA 1 & 2 LIGHTING PLAN
0	-	E-S7-118	COLORADO/4TH STREET STATION TICKETING AREA 1 & 2 GROUNDING & POWER PLAN
0	-	E-S7-119	COLORADO/4TH STREET STATION TICKETING AREA 1 & 2 COMMUNICATION & UFS PLAN
0	-	E-S7-120	COLORADO/4TH STREET STATION TRAIN OPERATOR SUPERVISOR BOOTH LIGHTING, POWER AND COMMUNICATION PLAN
0	-	E-S7-121	COLORADO/4TH STREET STATION PLAZA LIGHTING PLAN
0	-	E-S7-122	COLORADO/4TH STREET STATION PLAZA POWER AND GROUNDING PLAN
0	-	E-S7-123	COLORADO/4TH STREET STATION ACCESS RAMPS LIGHTING PLAN
0	-	E-S7-124	COLORADO/4TH STREET STATION TPSS 5th STREET SITE PLAN POWER AND GROUNDING PLAN
0	-	E-S7-170	COLORADO/4TH STREET STATION COMMUNICATION/SIGNAL BUILDING CABLE TRAY LAYOUT, ELEVATION, AND RACK POWER PLAN
0	-	E-S7-171	COLORADO/4TH STREET STATION COMMUNICATION/SIGNAL BUILDING UNDERGROUND CONDUIT PLAN
0	-	E-S7-172	COLORADO/4TH STREET STATION COMMUNICATION/SIGNAL BUILDING CABLE TRAY LAYOUT, ELEVATION, AND RACK POWER PLAN
0	-	E-S7-173	COLORADO/4TH STREET STATION COMMUNICATION/SIGNAL BUILDING CABLE TRAY LAYOUT, ELEVATION, AND RACK POWER PLAN
0	-	E-S7-174	COLORADO/4TH STREET STATION COMMUNICATION/SIGNAL BUILDING UNDERGROUND CONDUIT PLAN
			ENERGY - TITLE 24
0	-	ET-S7-001	COLORADO/4TH STREET STATION TITLE 24 TOS BOOTH ENV/HVAC/LIGHTING CALCS SHEET 1 OF 6
0	-	ET-S7-002	COLORADO/4TH STREET STATION TITLE 24 TOS BOOTH ENV/HVAC/LIGHTING CALCS SHEET 2 OF 6
0	-	ET-S7-003	COLORADO/4TH STREET STATION TITLE 24 TOS BOOTH ENV/HVAC/LIGHTING CALCS SHEET 3 OF 6
0	-	ET-S7-004	COLORADO/4TH STREET STATION TITLE 24 TOS BOOTH ENV/HVAC/LIGHTING CALCS SHEET 4 OF 6
0	-	ET-S7-005	COLORADO/4TH STREET STATION TITLE 24 TOS BOOTH ENV/HVAC/LIGHTING CALCS SHEET 5 OF 6
0	-	ET-S7-006	COLORADO/4TH STREET STATION TITLE 24 TOS BOOTH ENV/HVAC/LIGHTING CALCS SHEET 6 OF 6

SRJV
JUN 24 2013
ISSUED FOR CONSTRUCTION

REV	DATE	BY	APP	REG NO	EXPIRES	SEAL HOLDER	DESCRIPTION
0	5/30/13	DR	PWT	C43086	03/31/14	PETER W. TUCCILLO	APPROVED FOR CONSTRUCTION

DESIGNED BY D. RODRIGUEZ
DRAWN BY R. JONES
CHECKED BY P. TUCCILLO
IN CHARGE P. TUCCILLO
DATE 5/30/13

REGISTERED PROFESSIONAL ENGINEER
PETER W. TUCCILLO
No. C43086
Exp. 03-31-14
CIVIL
STATE OF CALIFORNIA

Exposition Metro Line Construction Authority
Expo
Exposition Construction Authority
Approved for Construction
Drawings - AFC

EXPO SKANSKA RADOS
444 South Flower Street
Suite 2200
Los Angeles, CA 90071
TEL (213) 443-7463
FAX (213) 362-9481

PARSONS BRINCKERHOFF
JUN 21 2013
CURRENT STATUS

EXPOSITION LRT PROJECT- PHASE 2
GENERAL
COLORADO / 4TH ST STATION
INDEX OF DRAWINGS
SHEET 2 OF 2

CONTRACT NO XP8902-002
DRAWING NO G-S7-002
REV 0
SCALE NONE
SHEET NO

RodriguezD 5:56:12 PM 5/29/2013 C:\Expo2\general\Sta 07 4th Strett Station\expo2-g-S7-002.plg

Plot Driver=EXPO2-Full-BW-pdf.plt Pentable=EXPO2-PENTABLE.tbl

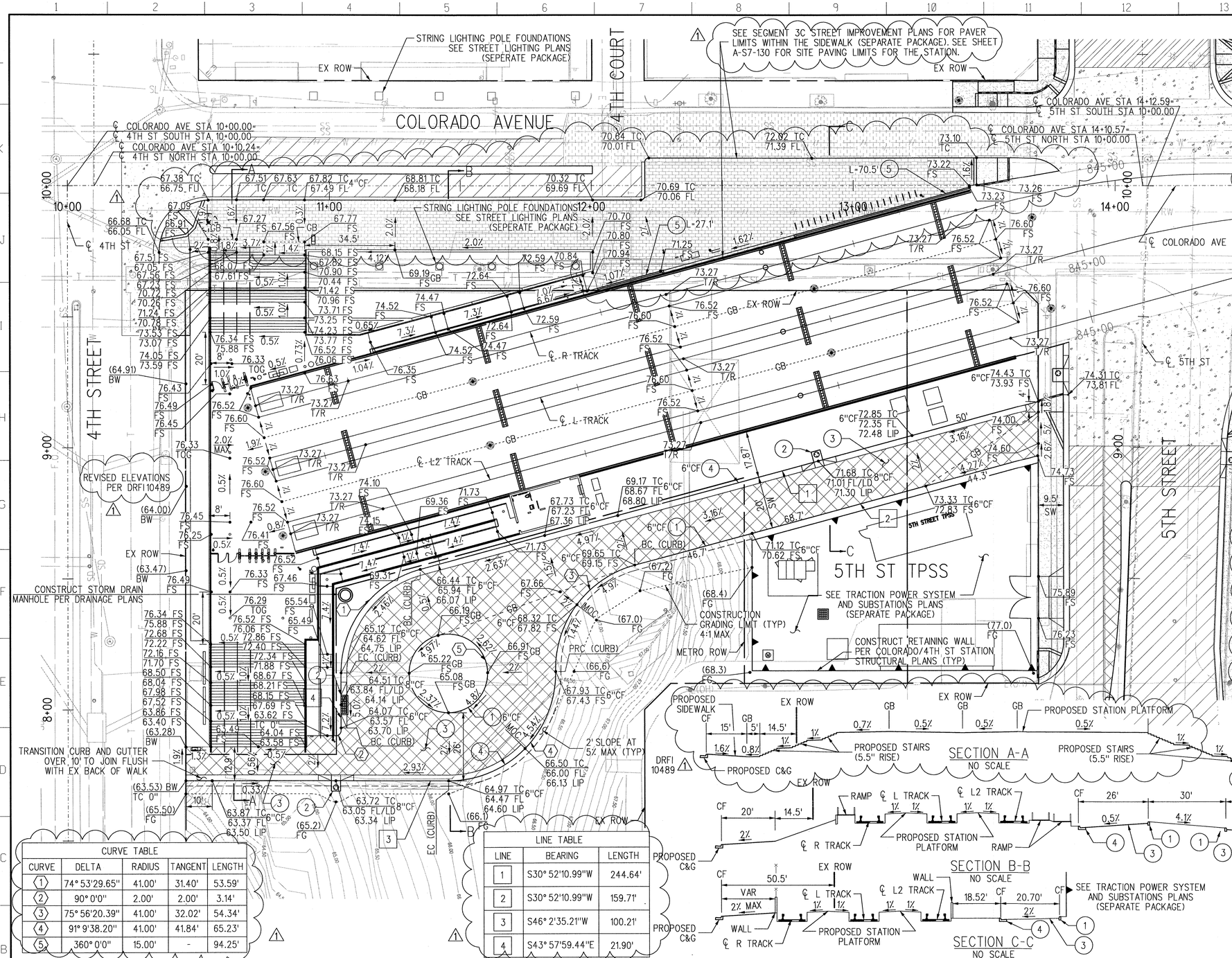

CONSTRUCTION NOTES

1. CONSTRUCT TYPE "A" CURB PER CITY OF SANTA MONICA STD. DETAIL SM 6. STD. CURB HEIGHT UNLESS NOTED OTHERWISE ON THE PLANS.
2. CONSTRUCT INLET PER DRAINAGE PLANS.
3. CONSTRUCT 3" ASPHALT CONCRETE PAVEMENT OVER 10" AB, SCARIFIED AND RECOMPACTED SUBGRADE PER GEOTECHNICAL REPORT AND SPECIFICATIONS, OR AS DIRECTED BY THE GEOTECHNICAL ENGINER AFTER EVALUATION OF FIELD CONDITIONS.
4. CONSTRUCT CURB AND GUTTER PER CITY OF SANTA MONICA STD. DETAIL SM6. STD. CURB HEIGHT UNLESS NOTED OTHERWISE ON THE PLANS.
5. CONSTRUCT CONCRETE HEADER PER DETAIL A.

NOTES

1.) THIS PLAN IS ACCURATE FOR STATION GRADING ONLY. FOR ADJACENT STREET IMPROVEMENTS AND STREET LIGHTING SEE SEGMENT 3C STREET IMPROVEMENT PLANS AND STREET LIGHTING. (SEPARATE PACKAGE)

2.) FOR REMOVALS WITHIN THE PROPOSED GRADING AREA SEE CONTRACTOR WORK PLAN (CWP) FOR LIMITS OF WORK. (SEPARATE PACKAGE)

3.) THE CONTRACTOR SHALL VERIFY TIE-IN ELEVATIONS PRIOR TO CONSTRUCTION AND SHALL NOTIFY THE ENGINEER OF ANY DISCREPANCIES.

4.) SEE SEGMENT 3C PACKAGE FOR GENERAL NOTES, ABBREVIATIONS, SYMBOLS, AND ADDITIONAL LEGENDS. (SEPARATE PACKAGE)

NOTES:
1.) SEE SEGMENT 3C PACKAGE, SHEET CC-3C-303 FOR PAVER DETAILS (SEPARATE PACKAGE

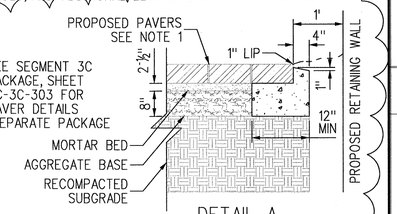

DETAIL A
CONCRETE HEADER
NO SCALE

LEGEND

- RECONSTRUCT AC PAVEMENT
- CONSTRUCT AC PAVEMENT
- CONSTRUCT VARIABLE DEPTH AC OVERLAY
- CONSTRUCT CONCRETE PAVEMENT
- CONSTRUCT CONCRETE SIDEWALK
- CONSTRUCT VARIALBE DEPTH AC OVERLAY (4" MINIMUM)
- INSTALL CSM PAVERS

SRJV
OCT 01 2014
ISSUED FOR CONSTRUCTION

SECTION A-A
NO SCALE

SECTION B-B
NO SCALE

SECTION C-C
NO SCALE

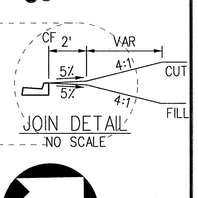

JOIN DETAIL
NO SCALE

Exposition Construction Authority Approved for Construction Drawings - AFC
SEP 30 2014

20' 10' 0 20' 40'

CURVE TABLE

CURVE	DELTA	RADIUS	TANGENT	LENGTH
1	74° 53'29.65"	41.00'	31.40'	53.59'
2	90° 0'0"	2.00'	2.00'	3.14'
3	75° 56'20.39"	41.00'	32.02'	54.34'
4	91° 9'38.20"	41.00'	41.84'	65.23'
5	360° 0'0"	15.00'	-	94.25'

LINE TABLE

LINE	BEARING	LENGTH
1	S30° 52'10.99"W	244.64'
2	S30° 52'10.99"W	159.71'
3	S46° 2'35.21"W	100.21'
4	S43° 57'59.44"E	21.90'

REV	DATE	BY	APP	REG NO	EXPIRES	SEAL HOLDER	DESCRIPTION
1	7/16/14	FH	DJA	C53031	06-30-15	DARREN J. ADRIAN	ECI 98
0	3/5/13	FH	DJA	C53031	06-30-13	DARREN J. ADRIAN	APPROVED FOR CONSTRUCTION

REVISION DATES (REVISION & PHASE ONLY)

DESIGNED BY J. GATZA
DRAWN BY J. GATZA
CHECKED BY F. HOFFMANN
IN CHARGE D. ADRIAN
DATE 5/30/13

REGISTERED PROFESSIONAL ENGINEER DARREN J. ADRIAN No. C53031 Exp. 06-30-15 CIVIL STATE OF CALIFORNIA

Exposition Metro Line Construction Authority
Expo
444 South Flower Street
Suite 2200
Los Angeles, CA 90071
TEL (213) 443-7463
FAX (213) 362-9481
EXPO SKANSKA RADOS

PARSONS BRINCKERHOFF
Kimley-Horn and Associates, Inc. 660 SOUTH FIGUEROA STREET SUITE 1040 LOS ANGELES, CA 90017 TEL: (213) 281-4040

EXPOSITION LRT PROJECT- PHASE 2
COLORADO/4TH ST STATION
CIVIL SITE PLAN

CONTRACT NO XP8902-002
DRAWING NO CG-3C-301
REV 1
SCALE 1"=20'
SHEET NO OF

SCALES: HORIZ SCALE: 1"=20' VERT SCALE: NO SCALE
SHEET
INDEX NUMBER

justin.gatza 3:51:40 PM 7/22/2014
Plot Driver=EXPO2-PDF-Full-BW.plt Pentable=EXPO2-PENTABLE.tbl c:\projectwise\dms11375\expo2-cg-3c-301.plg

CURRENT STATUS

Sheet Version 2.01

REFERENCE: | CITY DRAWING NO. | SHEET NO.: OF | DATE: 9-29 2014
SUBMITTED BY: | APPROVED BY: LEON E. SWAIN, P.E., CITY ENGINEER | ENGINEERING
DATE: 20__ | REVIEWED: | DATE: 20__ | REVIEWED: | DATE: 9-29 2014 | REVIEWED: | CITY
NO. | DATE | BY | DESCRIPTION | APPROVED
REVISIONS

City of Santa Monica
Department of Public Works
1437 4th Street, Suite 300 Santa Monica, CA 90401
TEL. (310)458-8721 FAX. (310)393-4425
e-mail : smengineering@smgov.net

Plotted by: justin.gatza 7/22/2014 c:\projectwise\dms11375\expo2-cg-3c-301.plg

CONSTRUCTION SYMBOLS

- CONSTRUCT
- EXISTING
- REMOVE
- REMOVE AND RECONSTRUCT
- REMODEL EXISTING
- WORK BY OTHERS

CONSTRUCTION NOTES

NO.	DESCRIPTION	DIMENSION (IF APPLICABLE)	STANDARD PLAN (IF APPLICABLE)		SPECIAL DETAILS
			CITY OF SANTA MONICA	COUNTY OF LA	
1	CURB OPENING CATCH BASIN	V, W, H, A	SPPWC 300-3	SPPWC 300-3	
2	MANHOLE PIPE TO PIPE (LESS THAN 33")	M, H, A	SPPWC 321-2	SPPWC 321-2	
3	18" INLINE DRAIN (SEE GUIDEWAY PACKAGE)				CDD-002
4	JUNCTION STRUCTURE - PIPE TO PIPE INLET (ID < 24")	CASE, A	SPPWC 332-2	SPPWC 332-2	
5	MONOLITHIC CATCH BASIN CONNECTION	A, FOR B<12" USE 12" APPLICATION	SPPWC 308-2	SPPWC 308-2	
6	TRANSITION STRUCTURE - PIPE TO PIPE	A, B, C, D1, D2	SPPWC 340-2	SPPWC 340-2	
7	LOCAL DEPRESSION AT CATCH BASIN, K=5.0' (UNLESS OTHERWISE NOTED)	H	SPPWC 313-3	SPPWC 313-2	
8	REINFORCED CONCRETE PIPE (RCP)	DIAMETER, D-LOAD			
9	PIPES LAYING IN TRENCHES	BEDDING CASE		S-3083-3	
10	REINFORCED CONCRETE BOX (RCB)	S, L, H	SPPWC 390-0	SPPWC 390-0	
11	CATCH BASIN IN DITCH (TYPE PROVIDED IN PROFILE)	H			CALTRANS D73
12	CLEANOUT (SEE GUIDEWAY PACKAGE)				CDD-002
13	CONCRETE COLLAR		SPPWC 380-4	SPPWC 380-4	
14	JUNCTION STRUCTURE PIPE TO PIPE (INLET ID > 24" OR OD > ½MAIN LINE ID)	A, B, C, D, ELEV R, ELEV S	SPPWC 331-3	SPPWC 331-3	
15	JUNCTION STRUCTURE - PIPE TO RCB	A, B, C, ELEV R, ELEV S FOR B<12" USE 12" APPLICATION	SPPWC 333-2	SPPWC 333-2	
16	NOT USED				
17	MAINTENANCE HOLE - PIPE TO PIPE (LARGE SIDE INLET)	A, B, C, D1, D2, ELEV R, ELEV S	SPPWC 322-2	SPPWC 322-2	
18	PERFORATED PIPE, SCH-40	SCHEDULE			
19	HDPE, SDR-21 OR APPROVED EQUAL	SCHEDULE			
20	BLANKET PROTECTION FOR PIPES		SPPWC 225-2		
21	NOT USED				
22	NOT USED				
23	SLOTTED DRAIN (SEE GUIDEWAY PACKAGE)				CDD-003
24	PVC, SCH-40 (UNLESS OTHERWISE NOTED)	SCHEDULE			
25	NOT USED				
26	TRACK DRAIN (SEE SEGMENT 3B PACKAGE)				CDD-006
27	GRATING CATCH BASIN - ALLEY (TRANSVERSE)	NO. OF GRATES, A, V, Vi, H	SPPWC 305-3	SPPWC 305-3	
28	L SHAPE CONNECTION (SEE GUIDEWAY PACKAGE)				CDD-007
29	PIPE CONNECTION TO EXISTING STORM DRAINS, CASE 3		SPPWC 335-2	SPPWC 335-2	
30	ABANDONMENT SEALS		SPPWC 381-2	SPPWC 381-2	
31	REMODEL CATCH BASIN (SEE SEGMENT 3B PACKAGE)				CDD-009
32	CORRUGATED METAL PIPE (CMP)	D			
33	CURB OPENING CATCH BASIN WITH GRATINGS	NO. OF GRATES, A, V, Vi, H	SPPWC 302-3	SPPWC 302-3	
34	PLASTIC PIPE W/ 4'-15' OF COVER		S-2022-1	S-2022-1	
35	18" x 4" HDPE TEE FITTING △1		△1	PER MANUFACTURER'S SPECS	
36	PLASTIC PIPE LESS THAN 4' COVER (SEE GUIDEWAY PACKAGE)			S-2023-2 (CASE IV)	
37	STORM DRAIN ENCASEMENT DETAIL (SEE GUIDEWAY PACKAGE)				CDD-002
38	THRUST RESTRAINT (SEE SEGMENT 3B PACKAGE)				CDD-004
39	WALL ANCHOR			PER MANUFACTURER SPECS	
40	BRICK ARCH				
41	MODIFICATION FOR SIDE OPENING CATCH BASIN	V, W, H, A	SPPWC 314-3	SPPWC 314-3	
42	CURBSIDE GRATING CATCH BASIN (SEE SEGMENT 3B PACKAGE)	NO. OF GRATES, A, V, W			CDD-011 & CDD-012

ABBREVIATIONS

&	AND	NIC	NOT IN CONTRACT
@	AT	NO. OR #	NUMBER
°	DEGREE	OCS	OVERHEAD CONTACT SYSTEM
		OH	OVERHEAD
ABND	ABANDONED	PROP	PROPOSED
AC	ASPHALT CONCRETE	PVC	POLYVINYL CHLORIDE
APPROX	APPROXIMATE	Q	RATE OF FLOW IN CUBIC FEET PER SECOND
AVE	AVENUE		
BLVD	BOULEVARD	R	RIGHT, RADIUS
℄	CENTERLINE	RCB	REINFORCED CONCRETE BOX
CB	CATCH BASIN	RCP	REINFORCED CONCRETE PIPE
CFS	CUBIC FEET PER SECOND	RT	RIGHT
CIP	CAST IN PLACE	RW	RETAINING WALL, RECLAIMED WATER
CMB	CRUSHED MISCELLANEOUS BASE	R/W	RIGHT-OF-WAY
CMP	CORRUGATED METAL PIPE	S	SLOPE
CO	CLEANOUT	SCHED	SCHEDULE
CSM	CITY OF SANTA MONICA	SD	STORM DRAIN
C/S	COMMUNICATION/ SYSTEMS	SLD	SLOTTED DRAIN
DR	DRIVE	SHT.	SHEET
DWG	DRAWING	SPEC	SPECIFICATIONS
ELEC	ELECTRICAL	SPPWC	STANDARD PLANS FOR PUBLIC WORKS CONSTRUCTION
ELEV	ELEVATION		
EX	EXISTING	SS	SANITARY SEWER
FO	FIBER OPTICS	ST	STREET
G	GAS	STA	STATION
H	HEIGHT	STL	STEEL
HDPE	HIGH DENSITY POLYETHYLENE	SUSMP	STANDARD URBAN STORMWATER MITIGATION PLAN
HGL	HYDRAULIC GRADE LINE		
HP	HIGH POINT	SYS	SYSTEM
ILD	INLINE DRAIN	TEL	TELEPHONE
INV	INVERT	TPSS	TRACTION POWER SUBSTATION
L	LENGHT, LEFT	TRKD	TRACK DRAIN
LACFCD	LOS ANGELES COUNTY FLOOD CONTROL DISTRICT	TV	TELEVISION
LT	LEFT	TYP	TYPICAL
MH	MANHOLE, MAINTENANCE HOLE	UD	UNDERDRAIN
MIN	MINIMUM	UNK	UNKNOWN
MSE	MECHANICALLY STABILIZED EARTH	W	WATER, WIDTH
		WD	WALL DRAIN

SRJV
FEB 27 2014
ISSUED FOR CONSTRUCTION

REV	DATE	BY	APP	REG NO	EXPIRES	SEAL HOLDER	DESCRIPTION
△1	12/9/13	NM	RCW	C78128	9/30/15	ROBERT C. WELCH	EC141
0	5/30/13	NM	RCW	C78128	9/30/13	ROBERT C. WELCH	APPROVED FOR CONSTRUCTION

DESIGNED BY N. MELTON
DRAWN BY M. GHANEM
CHECKED BY J. SCHICK
IN CHARGE R. WELCH
DATE 5/30/13

REGISTERED PROFESSIONAL ENGINEER — ROBERT C. WELCH — No. C78128 — Exp. 09-30-15 — CIVIL — STATE OF CALIFORNIA

Exposition Metro Line Construction Authority
Expo

EXPO SKANSKA RADOS
444 South Flower Street
Suite 2200
Los Angeles, CA 90071
TEL (213) 443-7463
FAX (213) 362-9481

PARSONS BRINCKERHOFF

CURRENT STATUS

Exposition Construction Authority Approved for Construction Drawings - AFC
FEB 26 2014

EXPOSITION LRT PROJECT- PHASE 2
STORM DRAIN - SEGMENT 3C
4TH STREET STATION
CONSTRUCTION NOTES

CONTRACT NO XP8902-002
DRAWING NO SDG-302
REV 1
SCALE NO SCALE
SHEET NO

HernandezH 3:10:40 PM 12/9/2013 C:\Users\hernandezh\Desktop\WELCH9-2\expo2-SDG-302.plg

Plot Driver=EXPO2-Full-BW-pdf.plt Pentable=EXPO2-PENTABLE.tbl

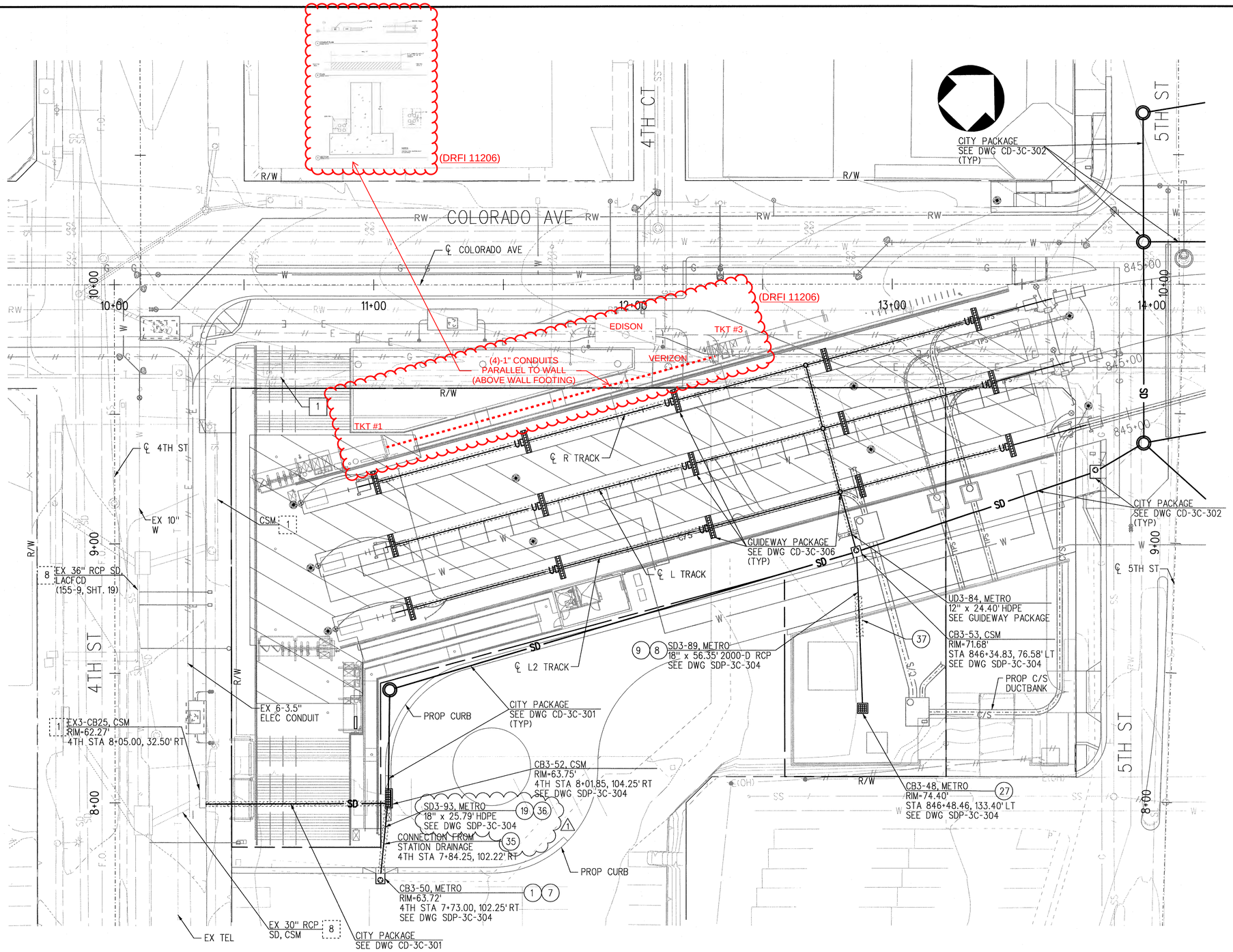

CONSTRUCTION NOTES

- CONSTRUCT
- EXISTING
- REMOVE
- REMODEL EXISTING
- REMOVE AND CONSTRUCT
- WORK BY OTHERS

NOTES:

1. FOR CONSTRUCTION NOTES SEE DWG SDG-302.
2. SEE UTILITY PLANS (UR) FOR EXISTING UTILITIES. UR-3C-301
3. SEE STREET IMPROVEMENT PLANS (CA) FOR PROPOSED CONSTRUCTION OF ROADWAY IMPROVEMENTS AND VERIFICATION OF RIM ELEVATIONS.
4. SEE STREET LIGHTING PLANS (SL) FOR EXACT LOCATIONS AND DETAILS.
5. SEE TRAFFIC SIGNAL PLANS (TR) FOR TRAFFIC SIGNAL POLE AND EQUIPMENT LOCATIONS AND DETAILS.
6. SEE SIGNING AND STRIPING PLANS (SS) FOR SIGNING AND STRIPING LOCATIONS AND DETAILS.
7. SEE TRACKWORK PLANS (T) FOR TRACK RELATED WORK.
8. SEE RIGHT-OF-WAY PLANS FOR RIGHT-OF-WAY TAKE AND TEMPORARY CONSTRUCTION EASEMENTS.
9. SEE DUCTBANK PLANS (NX) FOR EXACT LOCATIONS AND DETAILS.
10. SEE GUIDEWAY PLANS (GC) FOR FENCE REQUIREMENTS IN METRO R/W.
11. SEE GRADE CROSSING PLANS (GX) FOR GRADE CROSSING EQUIPMENT LOCATIONS AND DETAILS.
12. SEE FIBER OPTIC PLANS (NA) FOR EXACT LOCATION OF CSM FIBER OPTIC INTERCONNECT.
13. CONTRACTOR TO VERIFY EXISTING UTILITY LOCATIONS AND DEPTH.
14. ALL NEW AND REMOVED/REPLACED CATCH BASINS UNDER THIS PROJECT SHALL INCLUDE CATCH BASIN FILTER INSERTS AND CATCH BASIN OPENING SCREENS.
15. ALL NEW AND REMOVED/REPLACED CATCH BASINS UNDER THIS PROJECT SHALL BE STENCILED WITH PROHIBITIVE LANGUAGE, "NO DUMPING - DRAINS TO OCEAN".
16. OBTAIN LACFCD PERMIT PRIOR TO TIE IN TO ALL LACFCD FACILITIES.
17. SEE TRACTION POWER SYSTEMS PLANS (P) FOR GRADING DETAILS FOR TPSS & RADIO SITES.
18. STATIONING OFF R TRACK UNLESS OTHERWISE NOTED.

SRJV
FEB 27 2014
ISSUED FOR CONSTRUCTION

20' 0 20' 40'
HORIZ:1"=20'

REV	DATE	BY	APP	REG NO	EXPIRES	SEAL HOLDER	DESCRIPTION
1	2/4/14	NM	RCW	C78128	9/30/15	ROBERT C. WELCH	ECI 41
0	5/30/13	NM	RCW	C78128	9/30/13	ROBERT C. WELCH	APPROVED FOR CONSTRUCTION

DESIGNED BY N. MELTON
DRAWN BY L. SANCHEZ
CHECKED BY J. SCHICK
IN CHARGE R. WELCH
DATE 5/30/13

REGISTERED PROFESSIONAL ENGINEER ROBERT C. WELCH No. C78128 Exp. 09-30-15 CIVIL STATE OF CALIFORNIA

Exposition Metro Line Construction Authority
Expo

EXPO SKANSKA RADOS

444 South Flower Street
Suite 2200
Los Angeles, CA 90071
TEL (213) 443-7463
FAX (213) 362-9481

PARSONS BRINCKERHOFF

CURRENT STATUS

EXPOSITION LRT PROJECT- PHASE 2
STORM DRAIN, SEG 3C
4TH STREET STATION
PLAN

Exposition Construction Authority
Approved for Construction
Drawings - AFC
FEB 26 2014

CONTRACT NO XP8902-002
DRAWING NO CD-3C-305
REV 1
SCALE HOR: 1"=20' VERT: 1"=5'
SHEET NO

c:\projectwise\pb\projectwiseint\kyamakawa\dms09116\expo2-cd-3C-305.plg 2/4/2014 4:12:30 PM Yamakawa

Plot Driver=EXPO2-PDF-Full-BW.plt Pentable=EXPO2-PENTABLE.tbl

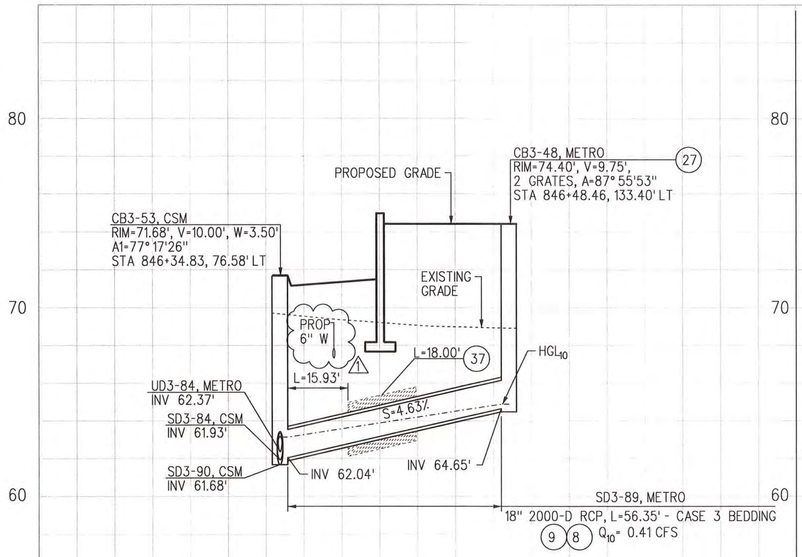

4TH ST TPSS SITE
STA 846+34.83 TO STA 846+48.46
(CB3-53, CB3-48)

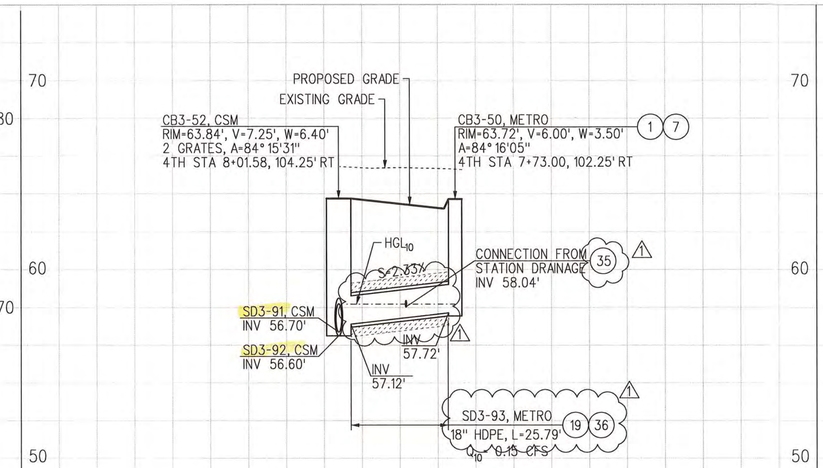

4TH STREET STATION DRAINAGE
4TH STA 8+01.58 TO 4TH STA 7+73.00
(CB3-52, CB3-50)

SRJV
MAR 04 2014
ISSUED FOR CONSTRUCTION

20' 0 20' 40'
HORIZ:1"=20'

REV	DATE	BY	APP	REG NO	EXPIRES	SEAL HOLDER	DESCRIPTION
1	2/4/14	NM	RCW	C78128	9/30/15	ROBERT C. WELCH	ECI 41, ECI 43.1
0	5/30/13	NM	RCW	C78128	9/30/13	ROBERT C. WELCH	APPROVED FOR CONSTRUCTION

DESIGNED BY N. MELTON
DRAWN BY L. SANCHEZ
CHECKED BY J. SCHICK
IN CHARGE R. WELCH
DATE 5/30/13

REGISTERED PROFESSIONAL ENGINEER
ROBERT C. WELCH
No. C78128
Exp. 09-30-15
CIVIL
STATE OF CALIFORNIA

Exposition Metro Line Construction Authority
Expo
EXPO SKANSKA RADOS
444 South Flower Street
Suite 2200
Los Angeles, CA 90071
TEL (213) 443-7463
FAX (213) 362-9481
PARSONS BRINCKERHOFF
CURRENT STATUS

EXPOSITION LRT PROJECT- PHASE 2
STORM DRAIN, SEG 3C
4TH STREET STATION
PROFILE
Exposition Construction Authority
Approved for Construction
Drawings - AFC
MAR 04 2014

CONTRACT NO XP8902-002
DRAWING NO SDP-3C-304
REV 1
SCALE HOR: 1"=20' VERT: 1"=5'
SHEET NO

Yamakawa 4:22:26 PM 2/4/2014 c:\projectwise\pb\projectwiseint\kyamakawa\dms09116\expo2-sdp-3C-304.plg

Plot Driver=EXPO2-PDF-Full-BW.plt Pentable=EXPO2-PENTABLE.tbl

ABBREVIATIONS

ABUT	ABUTMENT
ABT	ABOUT
ADA	AMERICANS WITH DISABILITIES ACT
ADAAG	ADA ACCESSIBILITY GUIDELINES
ADD'L	ADDITIONAL
ALT	ALTERNATE
ALUM	ALUMINUM
APPROX	APPROXIMATE
ARCH	ARCHITECTURE
ASTM	AMERICAN SOCIETY FOR TESTING AND MATERIALS
AUX	AUXILIARY
AVE	AVENUE
AWG	AMERICAN WIRE GAGE
BAL	BALANCE
BKF	BACKFILL
BM	BENCH MARK
BH	BORE HOLE
BL	BUILDING LINE
BLDG	BUILDING
BLS	BLUE LIGHT STATION
BLVD	BOULEVARD
BM	BEAM
BOT	BOTTOM
BRG	BEARING
BTW	BETWEEN
℄	CENTER LINE
C/S	COMMUNICATIONS & SIGNAL
C TO C	CENTER TO CENTER
CCTV	CLOSED CIRCUIT TELEVISION
CIP	CAST IN PLACE
CJ	CONSTRUCTION JOINT
CLR OR CL	CLEARANCE OR CLEAR
COL	COLUMN
COMM	COMMUNICATION(S)
CONC	CONCRETE
CONST	CONSTRUCTION
CONT	CONTINUED, CONTINUOUS
CPUC	CALIFORNIA PUBLIC UTILITIES COMMISSION
CR	CARD READER
CSM	CITY OF SANTA MONICA
D/B	DESIGN/BUILD
DEG	DEGREE
DET	DETAIL
DI	DRAIN INLET
DIA OR ϕ	DIAMETER
DIAG	DIAGONAL
DIAPH	DIAPHRAGM
DIM	DIMENSION
DL	DEAD LOAD
DN	DOWN
DWG	DRAWING
E	EAST
EA	EACH
ELECT	ELECTRICAL
EL OR ELEV	ELEVATION
EMP	EMERGENCY MANAGEMENT PANEL
EOP	EDGE OF PLATFORM
EQ, =	EQUAL
EQUIP	EQUIPMENT
ESC	ESCALATOR
ETEL	EMERGENCY TELEPHONE
EXC	EXCAVATE OR EXCAVATION
EXIST	EXISTING
EXP	EXPANSION
EW	EACH WAY
EXT	EXTERIOR
EXPO	EXPOSITION CONSTRUCTION
FD	FLOOR DRAIN
FL, FLR	FLOOR
FHC	FIRE HOSE CABINET
FHV	FIRE HOUSE VALVE
FIN	FINISH
FS	FINISH SURFACE
FT OR (')'	FEET OR FOOT
FTG	FOOTING
G	GRID
GA	GAGE OR GAUGE
GALV	GALVANIZED
GEN	GENERAL
GRD	GROUND
GTEL	GATE TELEPHONE
HD	HAND
HORIZ	HORIZONTAL
HM	HOLLOW METAL
HP	HIGH POINT
HT	HEIGHT
ID	INSIDE DIAMETER
IDS	INTRUSION DETECTION SYSTEM
IF	INSIDE FACE
IN OR ()"	INCHES OR INCH
INCL	INCLUSIVE, INCLUDING
INT	INTERIOR
INV	INVERT
IR	INSIDE RADIUS
JT	JOINT
K	KIP OR KIPS
L	LENGTH OR ANGLE OR LEFT
LB OR LBS	POUND OR POUNDS
LCD	LIQUID CRYSTAL DISPLAY
LH	LEFT HAND
LIN	LINEAR, LINEAL
LL	LIVE LOAD
LP	LOW POINT
LRT	LIGHT RAIL TRANSIT
LT	LEFT
MAX	MAXIMUM
MB	MACHINE BOLT
MECH	MECHANICAL
MEP	MECHANICAL, ELECTRICAL & PLUMBING
METRO	LOS ANGELES COUNTY METROPOLITAN TRANSPORTATION AUTHORITY
MH	MANHOLE
MIN	MINIMUM
()'	MINUTE
MISC	MISCELLANEOUS
#	NUMBER (REBAR SIZE)
N	NORTH
NF	NEAR FACE
NO	NUMBER
NOM	NOMINAL
NIC	NOT IN CONTRACT
NS	NEAR SIDE
NTS	NOT TO SCALE
OC	ON CENTER
OCS	OVERHEAD CONTACT SYSTEM
OD	OUTSIDE DIAMETER
OF	OUTSIDE FACE
O TO O	OUT TO OUT
OPNG	OPENING
OPP	OPPOSITE
OPP HD, OH	OPPOSITE HAND
PAC	PUBLIC ART COMPONENT
PC	PRECAST
PCID	PASSENGER CARD INTERFACE DEVICE
PL OR P/L	PROPERTY LINE
PLATF	PLATFORM
PROJ	PROJECTION
PSF	POUND PER SQUARE FOOT
PSI	POUND PER SQUARE INCH
PTEL	PASSENGER TELEPHONE
PTZ CCTV	PAN TILT ZOOM CLOSED CIRCUIT TELEVISION
R OR RAD	RADIUS OR RIGHT REBAR SIZE (NUMBER)
RD	ROAD
REF	REFERENCE
REINF	REINFORCING OR REINFORCEMENT
REQ'D	REQUIRED
REV	REVISION OR REVISED
RH	RIGHT HAND
RI	RISER/RISERS
RT	RIGHT
RW	RIGHT-OF-WAY
S	SOUTH
S/S	SIGNAGE/SYSTEMS
SAV	STAND ALONE VALIDATOR
SCHED	SCHEDULE
SEC OR ()"	SECOND
SECT	SECTION
SHT	SHEET
SIM	SIMILAR
SPA	SPACE OR SPACES
SPEC	SPECIFICATION
SQ	SQUARE
SQ FT OR SF	SQUARE FOOT
SS	STAINLESS STEEL
ST	STREET
STA	STATION
STD	STANDARD
STL	STEEL
STRUCT	STRUCTURAL, STRUCTURE
SYM	SYMMETRICAL
TAN	TANGENT
TC&C	TRACTION CONTROL AND COMMUNICATION
TEMP	TEMPORARY
THK	THICK
TG	TEMPERED GLASS
T&B	TOP & BOTTOM
TO	TOP OF
TOC	TOP OF CONCRETE
TOP	TOP OF PLATFORM
TOR OR T/R	TOP OF RAIL
TOS	TOP OF STEEL
TOW	TOP OF WALL
TPSS	TRACTION POWER SUBSTATION
TR	TREAD OR TREADS
TVM	TICKET VENDING MACHINE
TYP	TYPICAL
UON	UNLESS OTHERWISE NOTED
UNO	UNLESS NOTED OTHERWISE
US	UNDER SIDE
VENT	VENTILATION
VERT	VERTICAL
VIF	VERIFY IN FIELD
VMS	VARIABLE MESSAGE SIGN
VSS	VIDEO SURVEILLANCE SYSTEM
W	WEST
W/	WITH
W/O	WITHOUT
WD	WIDTH
WWF	WELDED WIRE FABRIC

SYMBOLS

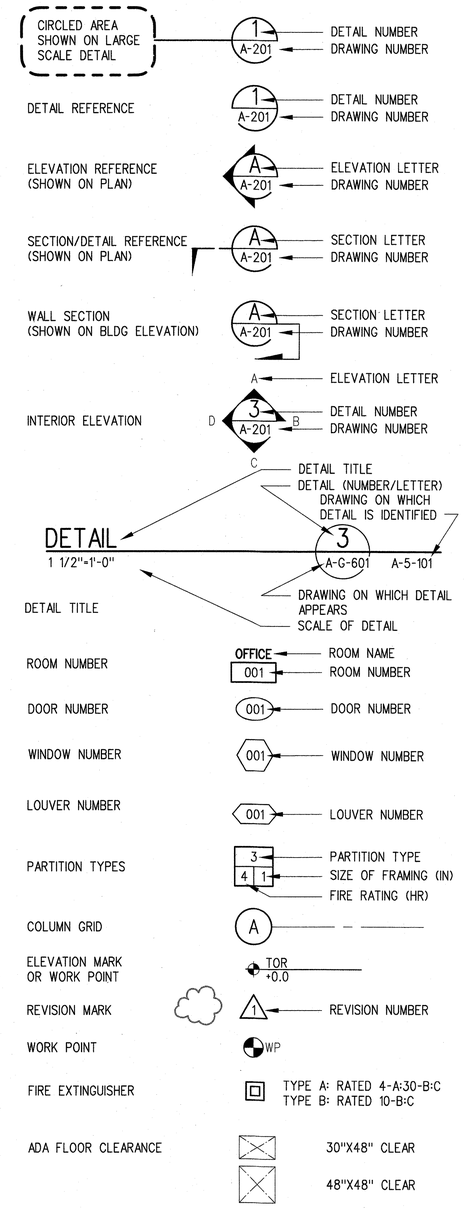

GENERAL NOTES

1. TICKET VENDING MACHINES, STAND ALONE VALIDATORS, FAREGATE CONSOLES, FARE BARRIER EMERGENCY SWING GATES AND ESCALATORS ARE NIC. SHOWN ON PLANS FOR LOCATION ONLY. PROVIDE CONDUIT STUB-UPS AS REQUIRED FOR EACH LOCATION. TO BE PROVIDED AND INSTALLED BY METRO.
2. SEE ELECTRICAL, MECHANICAL AND STRUCTURAL DRAWINGS FOR SIZE AND LOCATION OF PENETRATIONS (CONDUITS, MECHANICAL, AND UTILITY DUCTS, ETC.) THRU WALLS AND FLOORS.
3. PENETRATIONS THRU RATED WALLS, FLOORS OR ROOFS SHALL BE PROTECTED AND/OR FIRESTOP SEALED WITH MATERIAL OF THE SAME FIRE RATING AS THE PENETRATED WALLS, FLOORS OR ROOFS.
4. STATION MARKERS (PYLONS) ARE FURNISHED AND INSTALLED UNDER THIS CONTRACT. PROVIDE SUPPORTS AS INDICATED ON COMMON STATION DETAILS.
5. FOR LIGHTING TYPES AND APPROXIMATE LOCATIONS, SEE STATION ELECTRICAL PLANS. COORDINATE LOCATIONS WITH ARCHITECTURAL CEILING PLANS AND FINAL APPROVED MECHANICAL EQUIPMENT LAYOUTS.
6. PROVIDE NEOPRENE DIELECTRIC ISOLATION BARRIER BETWEEN DISSIMILAR METALS (TYPICAL).
7. STEEL ITEMS SHALL BE GALVANIZED, UNO.
8. DRILLED IN PLACE ANCHORS SHALL BE 304 STAINLESS STEEL ADHESIVE TYPE, UNO.
9. SHIM MEMBERS AT CONCRETE SURFACES AS REQUIRED.
10. PROVIDE SLOTTED HOLES IN METAL MEMBERS FOR ADJUSTMENT.
11. EXPOSED AREAS SUBJECT TO FOOT TRAFFIC SHALL BE SLIP RESISTANT, COEFFICIENT OF FRICTION 0.6 MIN WET AND DRY (ASTM C-1028). RAMPS ARE REQUIRED TO HAVE COEFFICIENT OF FRICTION 0.8 MIN PER DESIGN CRITERIA.
12. ART PANELS SHOWN ON PLANS AND ELEVATIONS ARE PROVIDED BY EXPO AND INSTALLED BY CONTRACTOR.
13. SPECIALTY PAVERS SHOWN ON PLANS ARE INSTALLED BY CONTRACTOR.
14. VERIFY LED AND LCD SIGNS WITH COMM DESIGN INSTALLATION PACKAGE.
15. THE DESIGN OF ALL AREA DRAINS AND TRENCH DRAINS SHALL BE ADA COMPLIANT.
16. LANDSCAPING IN LANDSCAPE AREAS IS NIC.

VICINITY MAP

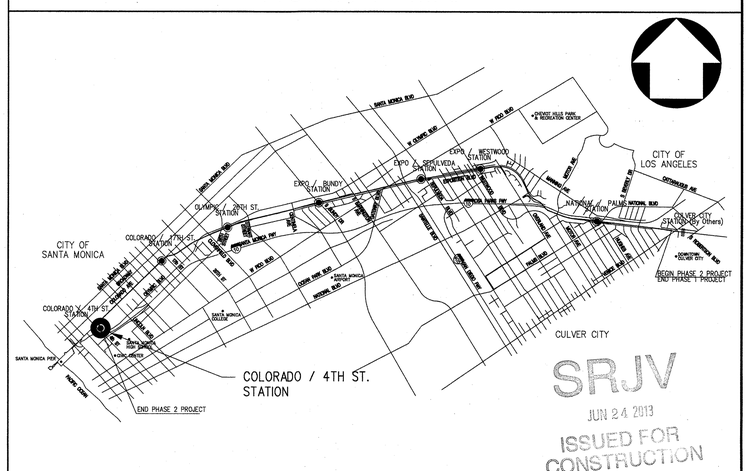

REV	DATE	BY	APP	REG NO	EXPIRES	SEAL HOLDER	DESCRIPTION
0	5/30/13	CS	JT	C21914	8/31/13	JOHN TRAUTMANN	APPROVED FOR CONSTRUCTION

THE PREPARATION OF THIS DRAWING HAS BEEN FINANCED BY THE TAXES OF THE CITIZENS OF LOS ANGELES COUNTY AND OF THE STATE OF CALIFORNIA.

DESIGNED BY J. JACOBSEN
DRAWN BY M. KHANBABIAN
CHECKED BY C. SUERO
IN CHARGE J. TRAUTMANN
DATE 5/30/13

LICENSED ARCHITECT JOHN P. TRAUTMANN No. C21914 Exp. 08-31-13 ARCHITECTURAL STATE OF CALIFORNIA

Exposition Metro Line Construction Authority
Expo
Exposition Construction Authority Approved for Construction Drawings - AFC

EXPO SKANSKA RADOS
444 South Flower Street
Suite 2200
Los Angeles, CA 90071
TEL (213) 443-7463
FAX (213) 362-9481

PARSONS BRINCKERHOFF JUN 21 2013
CURRENT STATUS

EXPOSITION LRT PROJECT- PHASE 2
COLORADO/4TH STREET STATION
ABBREVIATIONS, SYMBOLS, GENERAL NOTES AND VICINITY MAP

CONTRACT NO XP8902-002
DRAWING NO A-S7-001
REV 0
SCALE NONE
SHEET NO

C:\Users\khanbabiamm\Desktop\sheet-poplexpo2-A-S7-001.dwg
29-May-13 9:05 AM Khanbabian, Melinieh

CALGREEN CODE REQUIREMENTS

CODE SECTION	REQUIREMENT	DISCIPLINE IN CHARGE	REFERENCE SHEET	COMMENTS	APPLICABLE	NOT APPLICABLE
PLANNING AND DESIGN						
5.106.1	STORM WATER POLLUTION PREVENTION PLAN	CIVIL	BY CONTRACTOR		x	
5.106.4.1	SHORT TERM BICYCLE PARKING	ARCHITECTURE	SITE PLAN		x	
5.106.4.2	LONG-TERM BICYCLE PARKING	ARCHITECTURE				x
5.106.5.2	DESIGNATED PARKING	ARCHITECTURE/ CIVIL				x
5.106.8	LIGHT POLLUTION REDUCTION	ELECTRICAL/ ARCHITECTURE	ELECTRICAL TITLE 24		x	
5.106.10	GRADING AND PAVING	CIVIL	GRADING PLAN		x	
ENERGY EFFICIENCY						
5.201.1	ENERGY EFFICIENCY	ELECTRICAL	ELECTRICAL TITLE 24		x	
WATER EFFICIENCY & CONSERVATION						
5.303.1	METERS	PLUMBING				x
5.301.1.2	EXCESS CONSUMPTION	PLUMBING				x
5.302.2	20 PERCENT SAVINGS IN POTABLE WATER USE	PLUMBING				x
5.303.2.1	MULTIPLE SHOWERHEADS	PLUMBING				x
5.303.4	WASTEWATER REDUCTION	PLUMBING				x
5.303.6	PLUMBING FIXTURES AND FITTINGS	PLUMBING				x
5.304.1	WATER BUDGET	LANDSCAPE	SEE LANDSCAPE PLANS		x	
5.304.2	OUTDOOR POTABLE WATER USE	UTILITIES/ ARCHITECTURE				x
5.304.3	IRRIGATION DESIGN	IRRIGATION	SEE LANDSCAPE PLANS		X	
MATERIAL CONSERVATION & RESOURCE EFFICIENCY						
5.407.1	WEATHER PROTECTION	ARCHITECTURE				x
5.407.2	MOISTURE CONTROL	LANDSCAPE/ ARCHITECTURE				x
5.408.1	CONSTRUCTION WASTE DIVERSION	CONSTRUCTION	BY CONTRACTOR		x	
5.408.3	CONSTRUCTION WASTE REDUCTION OF AT LEAST 50 PERCENT	CONSTRUCTION	BY CONTRACTOR		x	
5.408.4	EXCAVATED SOIL AND LAND CLEARING DEBRIS	CONSTRUCTION	BY CONTRACTOR		x	
5.410.1	RECYCLING BY OCCUPANTS	ARCHITECTURE				x
5.410.2	COMMISIONING	CONSTRUCTION				x
5.410.2.1	OWNER'S PROJECT REQUIREMENTS (OPR)	OWNER				x
5.410.2.2	BASIS OF DESIGN (BOD)	DESIGN TEAM				x
5.410.2.3	COMMISSIONING PLAN	OWNER				x
5.410.2.4	FUNCTIONAL PERFORMANCE TESTING	DESIGN TEAM				x
5.410.2.5.1	SYSTEMS MANUAL	DESIGN TEAM				x
5.410.2.5.2	SYSTEMS OPERATIONS TRAINING	DESIGN TEAM				x
5.410.2.6	COMMISSIONING REPORT	COMMISSIONING AGENT				x
5.410.4	TESTING AND ADJUSTING	DESIGN TEAM/ COMMISIONING AGENT/ CONSTRUCTION				x
5.410.4.2	SYSTEMS					x
5.410.4.3	PROCEDURES					x
5.410.4.3.1	HVAC BALANCING					x
5.410.4.4	REPORTING					x
5.410.4.5	OPERATION AND MAINTENANCE MANUAL					x
5.410.4.5.1	INSPECTIONS AND REPORTS		BY CONTRACTOR		x	
ENVIRONMENTAL QUALITY						
5.503.1	FIREPLACES	ARCHITECTURE				Q Q
5.503.4	COVERING OF DUCT OPENINGS AND PROTECTION OF MECHANICAL EQUIPMENT DURING CONSTRUCTION	MECHANICAL/ CONSTRUCTION	SPECIFICATIONS		x	
5.504.4.1	ADHESIVES, SEALANTS, CAULKS	ARCHITECTURE	SPECIFICATIONS		x	
5.504.4.3	PAINTS AND COATINGS	ARCHITECTURE	SPECIFICATIONS		x	
5.504.4.3.1	AEROSOL PAINTS AND COATINGS	ARCHTIECTURE	SPECIFICATIONS		x	
5.504.4.4	CARPET SYSTEMS	ARCHITECTURE				x
5.504.4.4.1	CARPET CUSHION	ARCHITECTURE				x
5.504.4.4.2	CARPET ADHESIVE	ARCHITECTURE				x
5.504.4.5	COMPOSITE WOOD PRODUCTS	ARCHTIECTURE				x
5.504.4.6	RESILIENT FLOORING SYSTEMS	ARCHITECTURE	SPECIFICATIONS		x	
5.504.5.3	FILTERS	MECHANICAL	SPECIFICATIONS		x	
5.504.7	ENVIRONMENTAL TOBACCO SMOKE (ETS) CONTROL	ARCHITECTURE				x
5.505.1	INDOOR MOISTURE CONTROL	MECHANICAL				x
5.506.1	OUTSIDE AIR DELIVERY	MECHANICAL				x
5.506.2	CARBON DIOXIDE (CO2) MONITORING	MECHANICAL				x
5.507.4.1	EXTERIOR NOISE TRANSMISSION	ARCHITECTURE				x
5.507.4.2	INTERIOR SOUND	ARCHITECTURE				x
5.508.1.1	OUTDOOR AIR QUALITY: CFCS	MECHANICAL/ PLUMBING	SPECIFICATIONS		x	
5.508.1.2	OUTDOOR AIR QUALITY: HALONS	MECHANICAL/ PLUMBING	SPECIFICATIONS		x	

CITY OF SANTA MONICA MUNICIPAL CODE REQUIREMENTS

CODE SECTION	REQUIREMENT	DISCIPLINE IN CHARGE	REFERENCE SHEET	COMMENTS	APPLICABLE	NOT APPLICABLE
8.108.030	USE OF GREEN CONSTRUCTION MATERIALS	ARCHITECTURE				X
8.108.040.a	GREEN BUILDING CHECKLIST	ARCHITECTURE				X
8.108.040.b	SOLAR WATER HEATING	ELECTRICAL/ PLUMBING				X
8.108.040.c	PIPE INSULATION	PLUMBING				X
8.108.040.d	HEAT TRAPS	PLUMBING				X
8.108.060	ENERGY CODE COMPLIANCE	ELECTRICAL				X
8.108.100	LANDSCAPE AND WATER CONSERVATION	LANDSCAPE	SEE LANDSCAPE PLANS		X	

NOTES:

1. NEW PLUMBING FIXTURES AND FITTINGS SHALL NOT EXCEED THE MAXIMUM ALLOWABLE FLOW RATE SPECIFIED IN TABLE 5.303.2.3/TABLE 10.303.2.3. (5.303.2.1, 10.303.2.1)

2. AUTOMATIC LANDSCAPE IRRIGATORS SHALL BE INSTALLED SUCH THAT IT DOESN'T SPRAY ON THE BUILDING. (5.407.2.1, 10.407.2.1)

3. ONLY A CERTIFIED HAULER WILL BE USED FOR HAULING OF CONSTRUCTION WASTE. (5.408.1, 10.408.1)

4. 100% OF EXCAVATED SOIL AND VEGETATION RESULTING FROM LAND CLEARING SHALL BE REUSED OR RECYCLED. (5.408.4)

5. A FINAL REPORT FOR THE TESTING AND ADJUSTING OF ALL NEW SYSTEMS SHALL BE COMPLETED PRIOR TO FINAL APPROVAL BY THE FIELD INSPECTOR. THIS REPORT SHALL BE SIGNED BY THE INDIVIDUAL RESPONSIBLE FOR PERFORMING THESE SERVICES. (5.410.4.4)

6. FOR ALL NEW EQUIPMENT, AN OPERATION & SYSTEMS MANUAL, SHALL BE PROVIDED TO THE FIELD INSPECTOR AT THE TIME OF FINAL INSPECTION. (5.410.4.5, 10.410.4.5)

7. ALL DUCT AND OTHER RELATED AIR DISTRIBUTION COMPONENT OPENINGS SHALL BE COVERED WITH TAPE, PLASTIC, OR SHEETMETAL UNTIL THE FINAL STARTUP OF THE HEATING AND COOLING EQUIPMENT. (5.504.3, 10.504.3)

8. ARCHITECTURAL PAINTS AND COATINGS, ADHESIVES, CAULKS AND SEALANTS SHALL COMPLY WITH THE VOLATILE ORGANIC COMPOUND (VOC) LIMITS (5.504.4.1- 5.504.4.3, 10.504.4.1- 10.504.4.3) OR THOSE OF THE SOUTHERN CALIFORNIA AIR QUALITY MANAGEMENT DISTRICT (SCAQMD) RULE 1113, WHICHEVER IS MORE STRINGENT.

9. THE VOC CONTENT VERIFICATION CHECKLIST SHALL BE COMPLETED AND VERIFIED PRIOR TO FINAL INSPECTION APPROVAL. THE MANUFACTURER'S SPECIFICATIONS SHOWING VOC CONTENT FOR ALL APPLICABLE PRODUCTS SHALL BE READILY AVAILABLE AT THE JOB SITE AND BE PROVIDED TO THE FIELD INSPECTOR FOR VERIFICATION. (5.504.4, 10.504.4)

10. THE FORMALDEHYDE EMISSIONS VERIFICATION CHECKLIST, SHALL BE COMPLETED PRIOR TO FINAL INSPECTION APPROVAL. THE MANUFACTURER'S SPECIFICATIONS SHOWING FORMALDEHYDE CONTENT FOR ALL APPLICABLE WOOD PRODUCTS SHALL BE READILY AVAILABLE AT THE JOB SITE AND BE PROVIDED TO THE FIELD INSPECTOR FOR VERIFICATION. (5.504.4.5, 10.504.4.5)

11. 50% OF THE TOTAL AREA RECEIVING RESILIENT FLOORING SHALL COMPLY WITH THE VOC LIMITS OR BE CERTIFIED UNDER THE RESILIENT FLOOR COVERING INSTITUTE (RFCI) FLOORSCORE PROGRAM. (5.504.4.6, 10.504.4.6)

12. AN AIR FILTER WITH A MINIMUM EFFICIENCY REPORTING VALUE (MERV) OF 8 OR HIGHER SHALL BE INSTALLED IN THE MECHANICAL SYSTEM FOR OUTSIDE AND RETURN AIR PRIOR TO OCCUPANCY. (5.504.4.6, 10.504.4.6)

13. DESIGNATED OUTDOOR SMOKING AREA SHALL BE AT LEAST 25 FEET FROM AN OUTDOOR AIR INTAKE OR OPERABLE WINDOWS. (5.504.7, 10.504.7)

14. THE BUILDING SHALL MEET OR EXCEED THE PROVISIONS FOR MECHANICAL VENTILATION OF SECTION 1203 OF THE CALIFORNIA BUILDING CODE. (5.504.7, 10.504.7)

15. BUILDINGS THAT USE DEMAND CONTROL VENTILATION SHALL HAVE CO2 SENSORS AND VENTILATION CONTROLS INSTALLED IN ACCORDANCE WITH THE REQUIREMENTS OF THE CURRENT EDITION OF THE CALIFORNIA ENERGY CODE, CCR, TITLE 24, PART 6, SECTION 121(C).(5.506.2, 10.506.2)

16. THE HVAC, REFRIGERATION, AND FIRE SUPPRESSION EQUIPMENT SHALL NOT CONTAIN CFC OR HALONS. (5.508.1.1, 10.508.1.1

SRJV
JUN 24 2013
ISSUED FOR CONSTRUCTION

THE PREPARATION OF THIS DRAWING HAS BEEN FINANCED BY THE TAXES OF THE CITIZENS OF LOS ANGELES COUNTY AND OF THE STATE OF CALIFORNIA.

REV	DATE	BY	APP	REG NO	EXPIRES	SEAL HOLDER	DESCRIPTION
0	5/30/13	CS	JT	C21914	8/31/13	JOHN TRAUTMANN	APPROVED FOR CONSTRUCTION

DESIGNED BY J. JACOBSEN
DRAWN BY M. KHANBABIAN
CHECKED BY C. SUERO
IN CHARGE J. TRAUTMANN
DATE 5/30/13

LICENSED ARCHITECT JOHN P. TRAUTMANN No. C21914 Exp. 08-31-13 ARCHITECTURAL STATE OF CALIFORNIA

Exposition Metro Line Construction Authority
Expo
Exposition Construction Authority Approved for Construction Drawings - AFC
EXPO SKANSKA RADOS
444 South Flower Street
Suite 2200
Los Angeles, CA 90071
TEL (213) 443-7463
FAX (213) 362-9481
PARSONS BRINCKERHOFF
JUN 21 2013
CURRENT STATUS

EXPOSITION LRT PROJECT- PHASE 2
COLORADO/4TH STREET STATION
GREEN BUILDING CODE COMPLIANCE

CONTRACT NO XP8902-002
DRAWING NO A-S7-002
REV 0
SCALE NONE
SHEET NO

C:\Users\khanbabiamm\Desktop\sheet-pop\expo2-A-S7-002.dwg
29-May-13 9:05 AM Khanbabian, Melineh

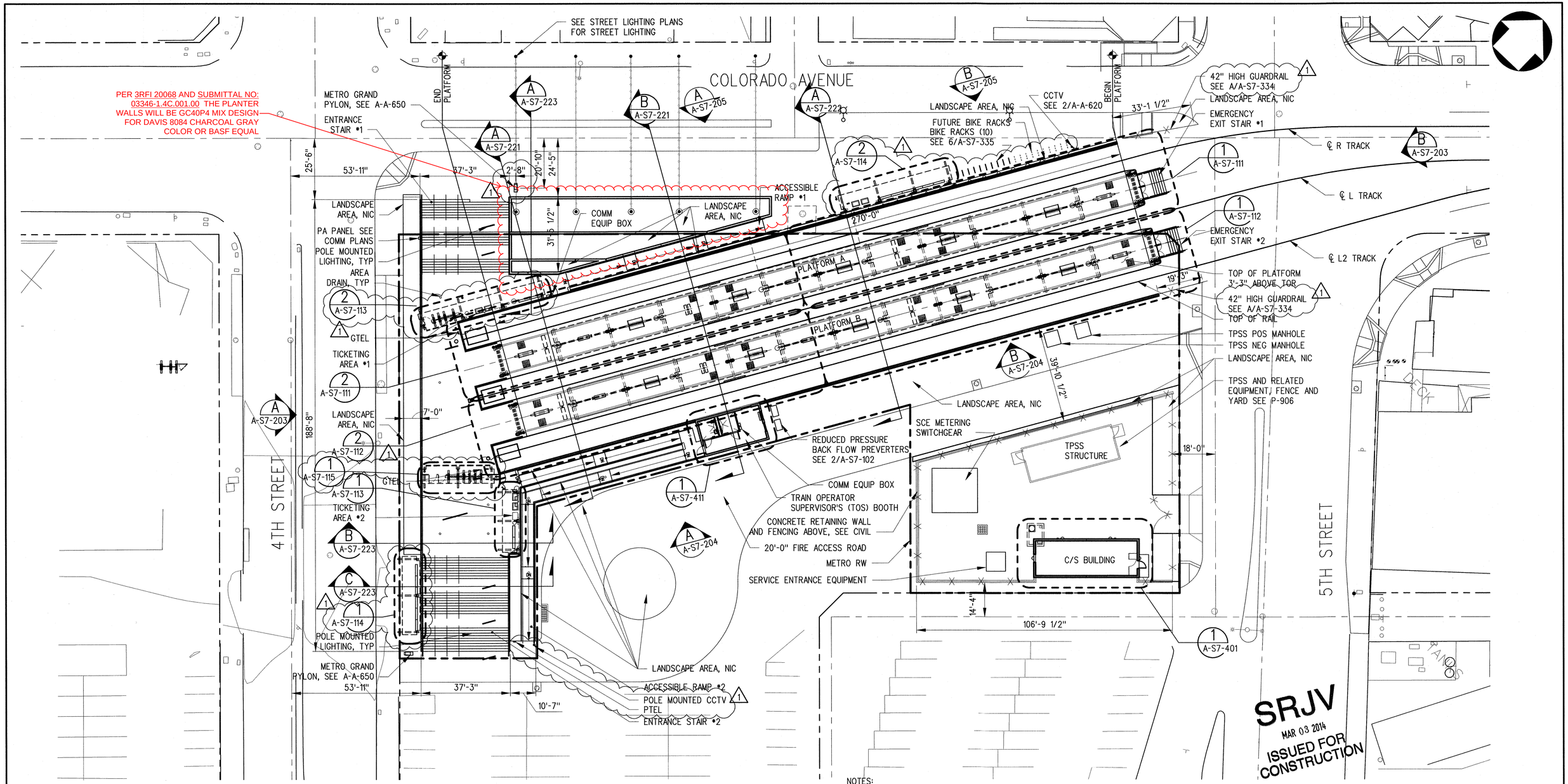

NOTES:

1. SEE UTILITY PLANS (UR) FOR EXISTING UTILITIES.
2. SEE TRAFFIC PLANS (TR) FOR TRAFFIC IMPROVEMENTS.
3. SEE STREET LIGHTING PLANS (SL) FOR EXACT LOCATIONS AND DETAILS.
4. SEE SIGNING AND STRIPING PLANS (SS) FOR EXACT LOCATIONS AND DETAILS.
5. SEE TRACKWORK PLANS (T) FOR TRACK RELATED WORK.
6. SEE RIGHT-OF-WAY PLANS FOR RIGHT-OF-WAY TAKE AND EASEMENTS.
7. SEE DRAINAGE PLANS (CD) FOR STORM DRAIN RELATED WORK.
8. SEE DUCTBANK PLANS (NX) FOR EXACT LOCATIONS AND DETAILS.
9. SEE GUIDEWAY PLANS (GC) FOR FENCE REQUIREMENTS IN METRO R/W.
10. SEE TRACTION POWER SYSTEM PLANS (P) FOR TRACTION POWER SCOPE.
11. SEE CIVIL PLANS (C) FOR CURB, SIDEWALK, PARKING, RAMPS AND STREET IMPROVEMENTS.

SITE PLAN 1 A-S7-101
1"=20'-0"

20' 10' 0 20' 40'

THE PREPARATION OF THIS DRAWING HAS BEEN FINANCED BY THE TAXES OF THE CITIZENS OF LOS ANGELES COUNTY AND OF THE STATE OF CALIFORNIA.

REV	DATE	BY	APP	REG NO	EXPIRES	SEAL HOLDER	DESCRIPTION
1	1/8/14	JJ	JT	C21914	8/31/15	JOHN TRAUTMANN	ECI 79
0	5/30/13	CS	JT	C21914	8/31/13	JOHN TRAUTMANN	APPROVED FOR CONSTRUCTION

DESIGNED BY J. JACOBSEN
DRAWN BY M. KHANBABIAN
CHECKED BY C. SUERO
IN CHARGE J. TRAUTMANN
DATE 5/30/13

LICENSED ARCHITECT JOHN F. TRAUTMANN No. C21914 Exp. 08-31-15 ARCHITECTURAL STATE OF CALIFORNIA

Exposition Metro Line Construction Authority
Expo
Exposition Construction Authority Approved for Construction Drawings - AFC
FEB 28 2014

EXPO SKANSKA RADOS

444 South Flower Street
Suite 2200
Los Angeles, CA 90071
TEL (213) 443-7463
FAX (213) 362-9481

PARSONS BRINCKERHOFF

CURRENT STATUS

EXPOSITION LRT PROJECT- PHASE 2
COLORADO/4TH STREET STATION
SITE PLAN

CONTRACT NO XP8902-002
DRAWING NO A-S7-101
REV 1
SCALE 1" = 20'-0"
SHEET NO

C:\projectwise\pb\projectwise\saintjacobsenj\dms11025\expo2-A-S7-101.dwg
25-Feb-14 8:56 AM Jacobsen, John J.

C:\projectwise\pb\projectwiseinit\khanbabianm\dms11025\expo2-A-S7-102.dwg

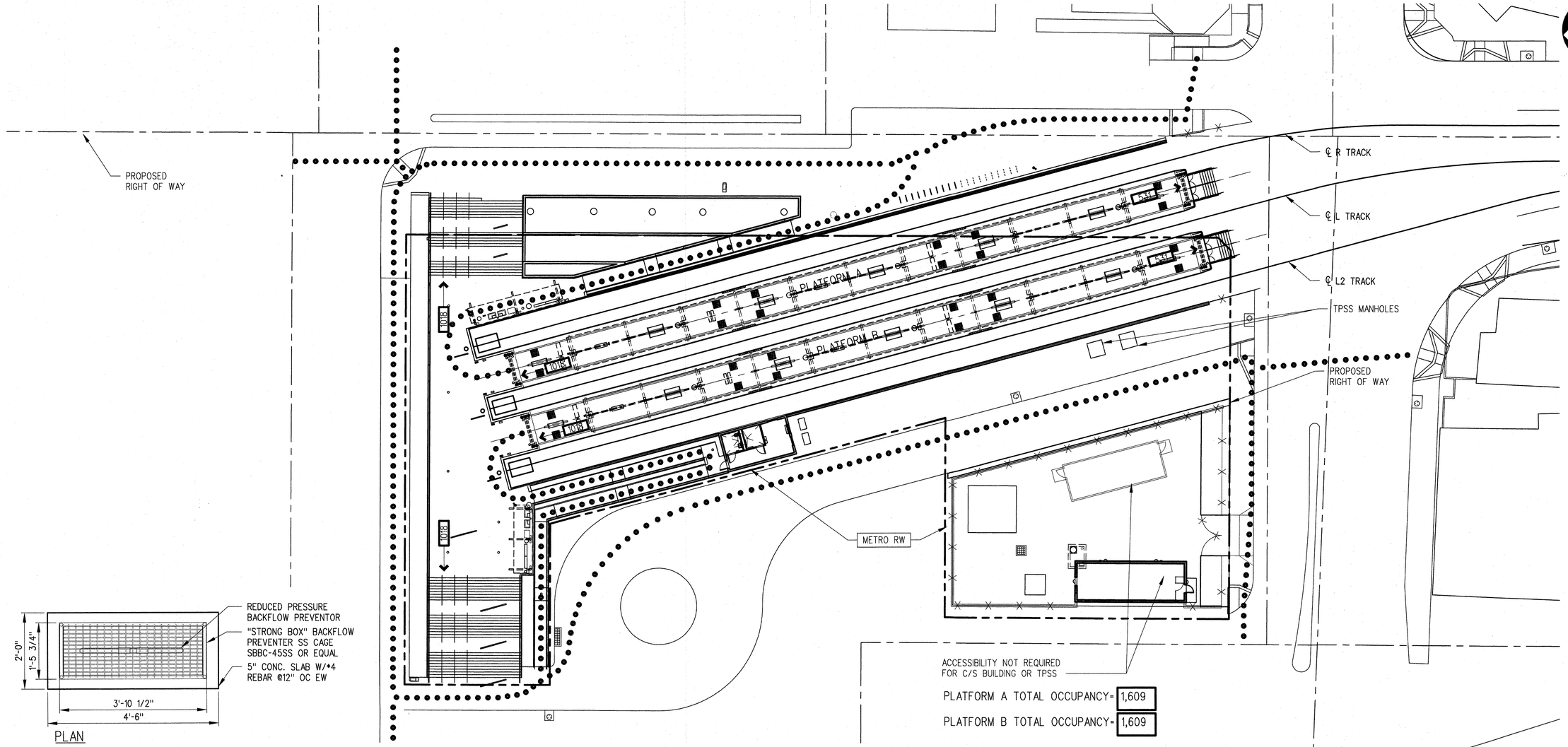

PLAN

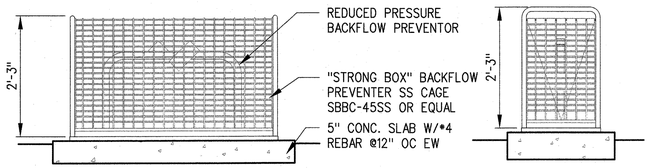

ELEVATION ELEVATION

BACKFLOW PREVENTER SS CAGE

3/4"=1'-0"

2 A-S5-102

ADA PATH OF TRAVEL

OCCUPANCY EXITING

NOTES:

1. ACCESSIBLE PATH OF TRAVEL AS INDICATED ON PLAN IS A BARRIER-FREE ACCESS ROUTE WITHOUT ANY ABRUPT LEVEL CHANGES EXCEEDING 1/2" IF BEVELED AT 1:2 MAX SLOPE, OR VERTICAL LEVEL CHANGES NOT EXCEEDING 1/4" MAX, AND AT LEAST 48" IN WIDTH. SURFACE IS STABLE, FIRM, AND SLIP RESISTANT. CROSS SLOPE DOES NOT EXCEED 2% AND SLOPE IN THE DIRECTION OF TRAVEL IS LESS THAN 5%, UNLESS OTHERWISED INDICATED. ACCESSIBLE PATH OF TRAVEL SHALL BE MAINTAINED FREE OF OVERHANGING OBSTRUCTIONS TO 80" MINIMUM, AND PROTRUDING OBJECTS GREATER THAN 4" PROJECTION FROM WALL AND ABOVE 27" AND LESS THAN 80". ARCHITECT SHALL VERIFY THAT THERE ARE NO BARRIERS IN THE PATH OF TRAVEL.

2. OCCUPANCY EXITING BASED ON OCCUPANCY LOAD FACTOR OF 7 PER CBC 2010 FLOOR AREA PER PERSON REQUIREMENTS

STATION EXITING AND ACCESS PLAN

1"=20'-0"

1 A-S7-102

20' 10' 0 20' 40'

SRJV

JUN 24 2013

ISSUED FOR CONSTRUCTION

THE PREPARATION OF THIS DRAWING HAS BEEN FINANCED BY THE TAXES OF THE CITIZENS OF LOS ANGELES COUNTY AND OF THE STATE OF CALIFORNIA.

REV	DATE	BY	APP	REG NO	EXPIRES	SEAL HOLDER	DESCRIPTION
0	5/30/13	CS	JT	C21914	8/31/13	JOHN TRAUTMANN	APPROVED FOR CONSTRUCTION

DESIGNED BY J. JACOBSEN
DRAWN BY M. KHANBABIAN
CHECKED BY C. SUERO
IN CHARGE J. TRAUTMANN
DATE 5/30/13

LICENSED ARCHITECT JOHN P. TRAUTMANN No. C21914 Exp. 06-30-13 ARCHITECTURAL STATE OF CALIFORNIA

Exposition Metro Line Construction Authority
Expo

Exposition Construction Authority Approved for Construction Drawings - AFC

EXPO SKANSKA RADOS

444 South Flower Street
Suite 2200
Los Angeles, CA 90071
TEL (213) 443-7463
FAX (213) 362-9481

PARSONS BRINCKERHOFF

JUN 21 2013

CURRENT STATUS

EXPOSITION LRT PROJECT- PHASE 2
COLORADO/4TH STREET STATION
SITE PLAN
EXITING AND ACCESS

CONTRACT NO XP8902-002
DRAWING NO A-S7-102
REV 0
SCALE 1" = 20'-0"
SHEET NO

29-May-13 10:56 AM Khanbabian, Melineh

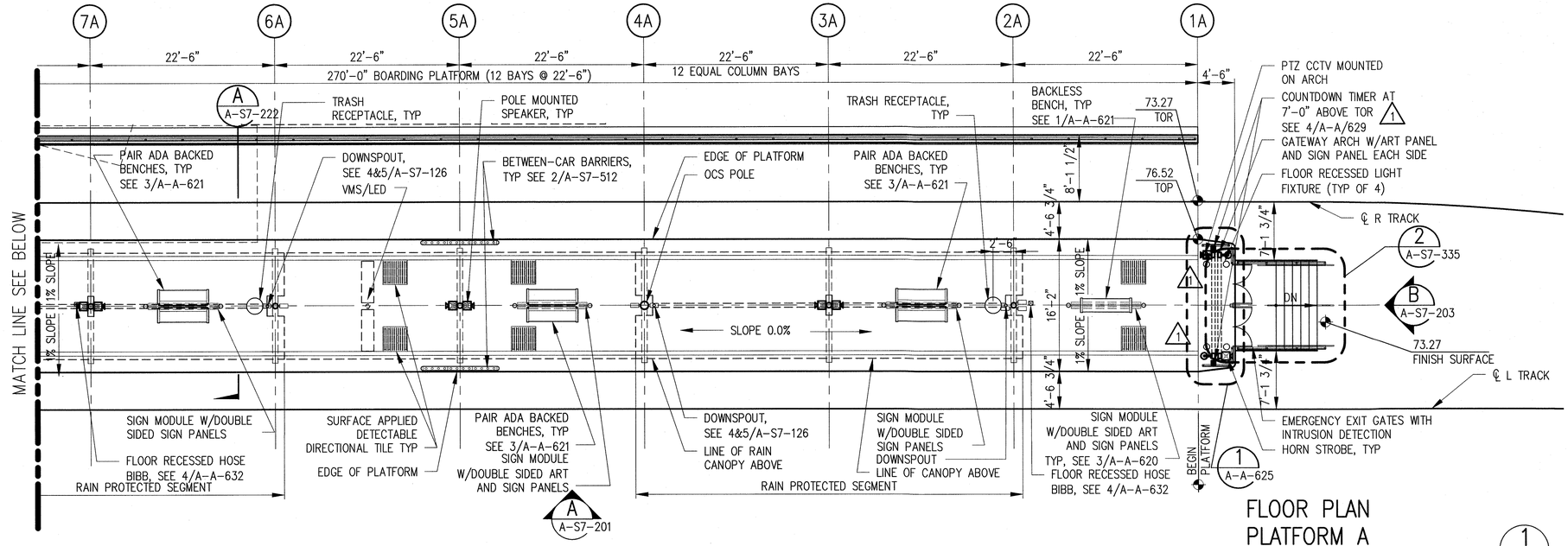

FLOOR PLAN PLATFORM A

1/8"=1'-0"

1 A-S7-111 A-S7-101

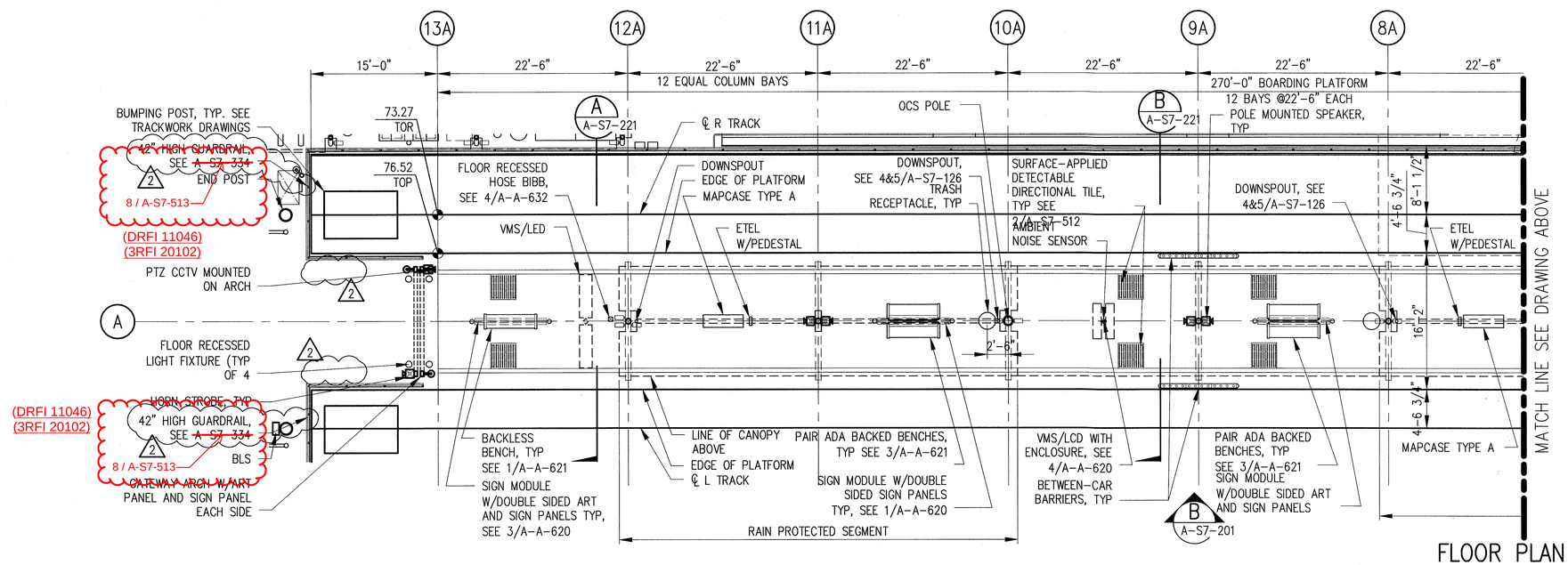

NOTE: SEE COMM PACKAGED FOR FINAL SPEAKER LOCATIONS

FLOOR PLAN PLATFORM A (CONT)

1/8"=1'-0"

2 A-S7-111 A-S7-101

8' 4' 0 8' 16'

SRJV
MAR 03 2014
ISSUED FOR CONSTRUCTION

THE PREPARATION OF THIS DRAWING HAS BEEN FINANCED BY THE TAXES OF THE CITIZENS OF LOS ANGELES COUNTY AND OF THE STATE OF CALIFORNIA.

REV	DATE	BY	APP	REG NO	EXPIRES	SEAL HOLDER	DESCRIPTION
2	1/8/14	JJ	JT	C21914	8/31/15	JOHN TRAUTMANN	ECI 79
1	10/22/13	JJ	JT	C21914	8/31/15	JOHN TRAUTMANN	ECI 51
0	5/30/13	CS	JT	C21914	8/31/13	JOHN TRAUTMANN	APPROVED FOR CONSTRUCTION

DESIGNED BY J. JACOBSEN
DRAWN BY M. KHANBABIAN
CHECKED BY C. SUERO
IN CHARGE J. TRAUTMANN
DATE 5/30/13

LICENSED ARCHITECT JOHN P. TRAUTMANN No. C21914 Exp. 08-31-15 ARCHITECTURAL STATE OF CALIFORNIA

Exposition Metro Line Construction Authority
Expo
Exposition Construction Authority Approved for Construction Drawings - AFC
FEB 28 2014

SKANSKA RADOS
444 South Flower Street
Suite 2200
Los Angeles, CA 90071
TEL (213) 443-7463
FAX (213) 362-9481

PARSONS BRINCKERHOFF

CURRENT STATUS

EXPOSITION LRT PROJECT- PHASE 2
COLORADO/4TH STREET STATION
FLOOR PLAN
PLATFORM A

CONTRACT NO XP8902-002
DRAWING NO A-S7-111
REV 2
SCALE 1/8" = 1'-0"
SHEET NO

C:\projectwise\pb\projectwiseinit\jacobsenj\dms11025\expo2-A-S7-111.dwg
7-Jan-14
9:11 AM
Jay Jacobsen

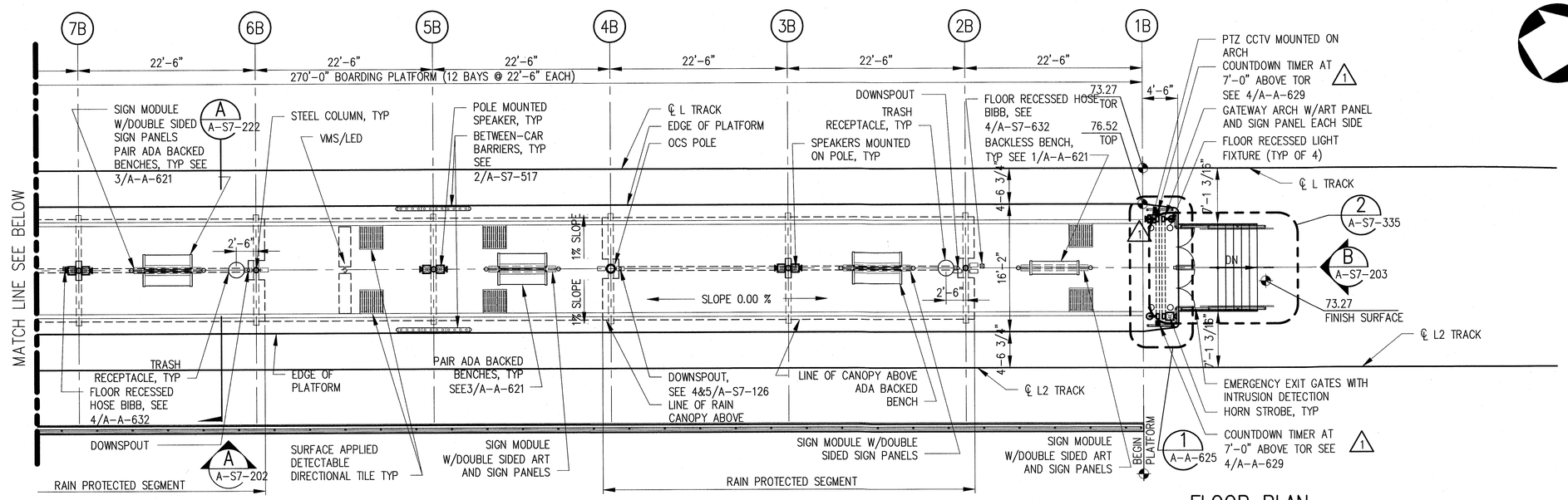

FLOOR PLAN PLATFORM B

1/8"=1'-0"

1 A-S7-112 A-S7-101

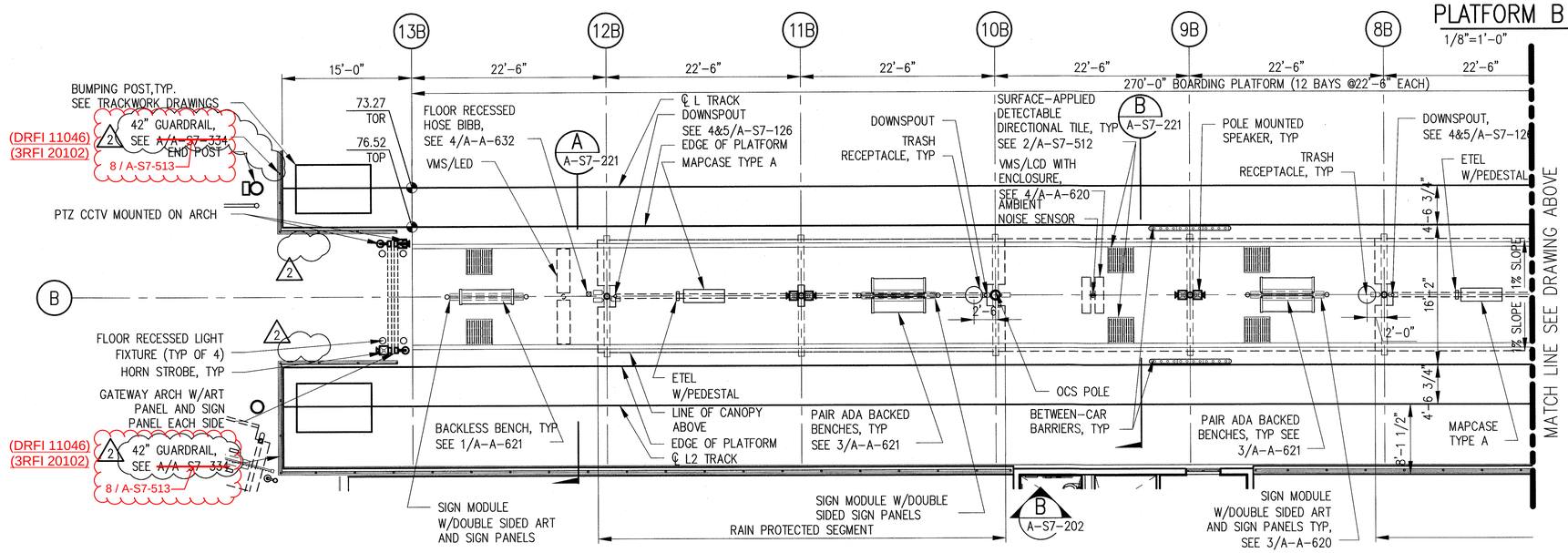

FLOOR PLAN PLATFORM B (CONT)

1/8"=1'-0"

2 A-S7-112 A-S7-101

NOTE: SEE COMM PACKAGED FOR FINAL SPEAKER LOCATIONS

8' 4' 0 8' 16'

SRJV
MAR 03 2014
ISSUED FOR CONSTRUCTION

THE PREPARATION OF THIS DRAWING HAS BEEN FINANCED BY THE TAXES OF THE CITIZENS OF LOS ANGELES COUNTY AND OF THE STATE OF CALIFORNIA.

REV	DATE	BY	APP	REG NO	EXPIRES	SEAL HOLDER	DESCRIPTION
2	1/8/14	JJ	JT	C21914	8/31/15	JOHN TRAUTMANN	ECI 79
1	10/22/13	JJ	JT	C21914	8/31/15	JOHN TRAUTMANN	ECI 51
0	5/30/13	CS	JT	C21914	8/31/13	JOHN TRAUTMANN	APPROVED FOR CONSTRUCTION

DESIGNED BY J. JACOBSEN
DRAWN BY M. KHANBABIAN
CHECKED BY C. SUERO
IN CHARGE J. TRAUTMANN
DATE 5/30/13

LICENSED ARCHITECT JOHN P. TRAUTMANN No. C21914 Exp. 08-31-15 ARCHITECTURAL STATE OF CALIFORNIA

Exposition Metro Line Construction Authority
Expo
Exposition Construction Authority Approved for Construction Drawings - AFC
FEB 28 2014

SKANSKA RADOS

444 South Flower Street
Suite 2200
Los Angeles, CA 90071
TEL (213) 443-7463
FAX (213) 362-9481

PARSONS BRINCKERHOFF

CURRENT STATUS

EXPOSITION LRT PROJECT- PHASE 2
COLORADO/4TH STREET STATION
FLOOR PLAN
PLATFORM B

CONTRACT NO XP8902-002
DRAWING NO A-S7-112
REV 2
SCALE 1/8" = 1'-0"
SHEET NO

C:\projectwise\pb\projectwise\mlijacobsenlj\dms11025\expo2-A-S7-112.dwg
7-Jan-14
9:21 AM
Jay Jacobsen

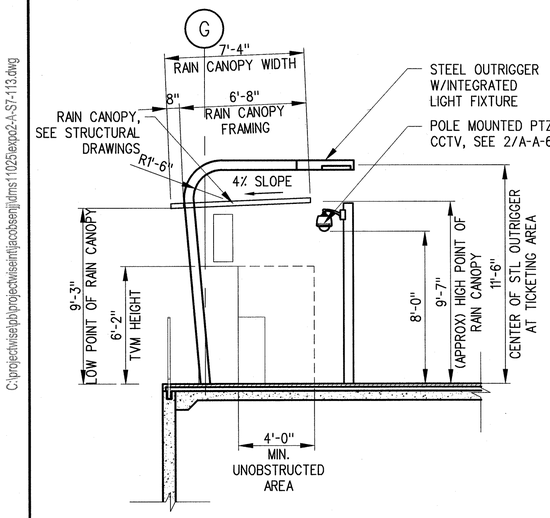

ENLARGED TICKETING AREA #2 SECTION

1/4"=1'-0"

C A-S7-113

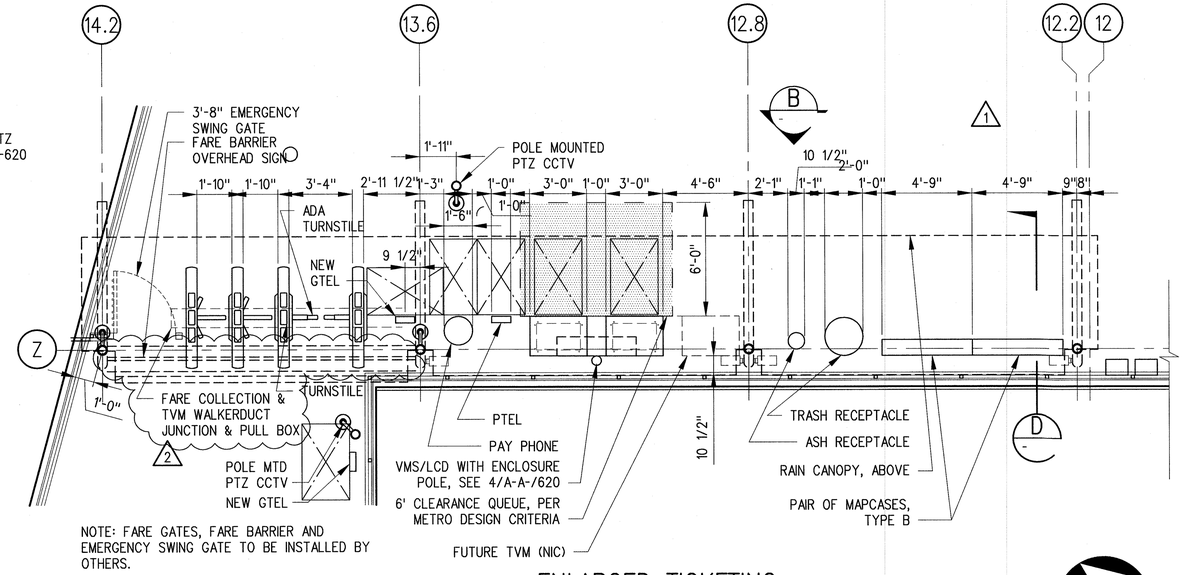

NOTE: FARE GATES, FARE BARRIER AND EMERGENCY SWING GATE TO BE INSTALLED BY OTHERS.

ENLARGED TICKETING AREA #1 PLAN

1/4"=1'-0"

2 A-S7-113 A-S7-101

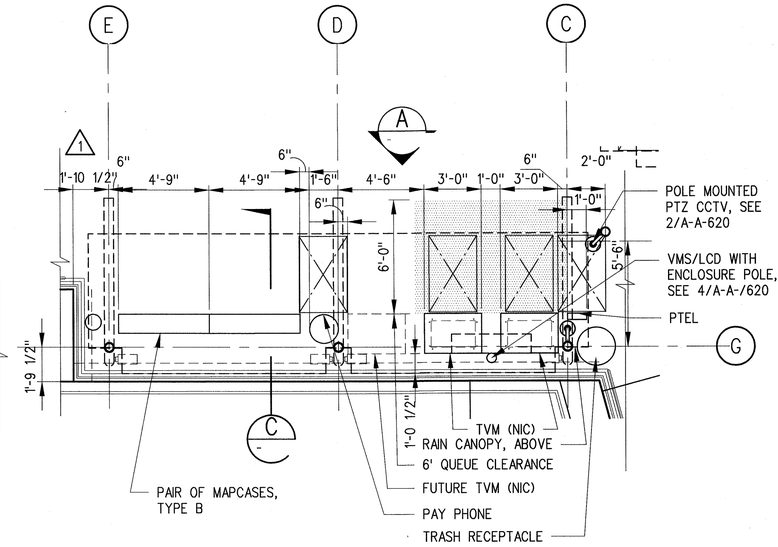

ENLARGED TICKETING AREA #2 PLAN

1/4"=1'-0"

1 A-S7-113 A-S7-101

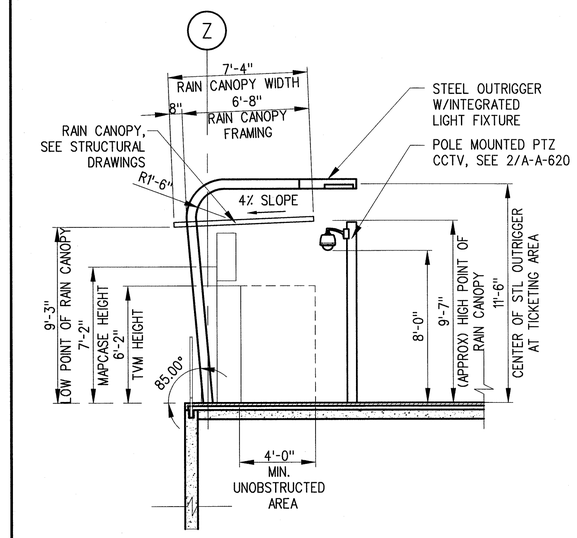

ENLARGED TICKETING AREA #1 SECTION

1/4"=1'-0"

D A-S7-113

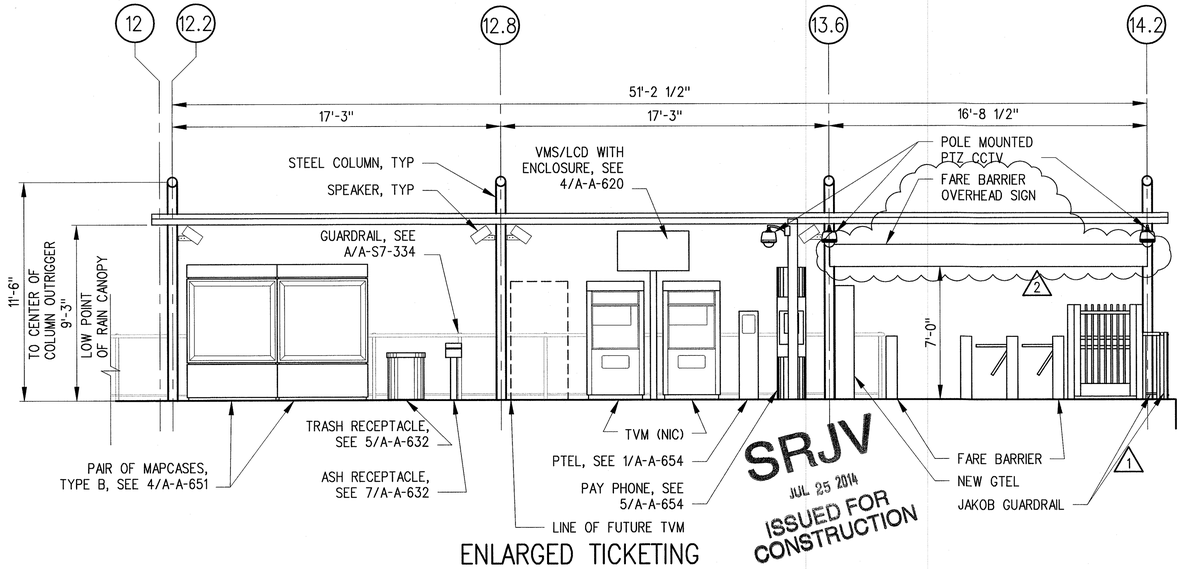

SRJV
JUL 25 2014
ISSUED FOR CONSTRUCTION

ENLARGED TICKETING AREA #1 ELEVATION

1/4"=1'-0"

B A-S7-113

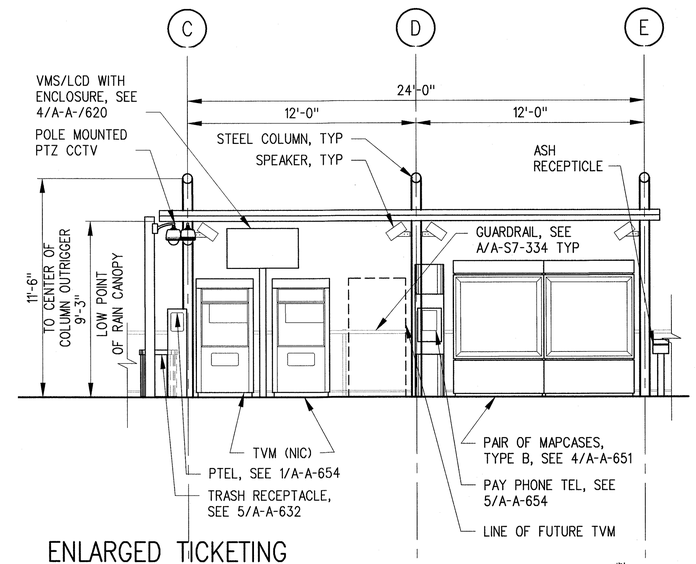

ENLARGED TICKETING AREA #2 ELEVATION

1/4"=1'-0"

A A-S7-113

4' 2' 0 4' 8'

Exposition Construction Authority Approved for Construction Drawings - AFC
JUL 24 2014

REV	DATE	BY	APP	REG NO	EXPIRES	SEAL HOLDER	DESCRIPTION
2	4/30/14	JJ	JT	C21914	8/31/15	JOHN TRAUTMANN	ECI 99
1	1/8/14	JJ	JT	C21914	8/31/15	JOHN TRAUTMANN	ECI 79
0	5/30/13	CS	JT	C21914	8/31/13	JOHN TRAUTMANN	APPROVED FOR CONSTRUCTION

THE PREPARATION OF THIS DRAWING HAS BEEN FINANCED BY THE TAXES OF THE CITIZENS OF LOS ANGELES COUNTY AND OF THE STATE OF CALIFORNIA.

DESIGNED BY J. JACOBSEN
DRAWN BY M. KHANBABIAN
CHECKED BY C. SUERO
IN CHARGE J. TRAUTMANN
DATE 5/30/13

LICENSED ARCHITECT JOHN P. TRAUTMANN No. C21914 Exp. 08-31-13 ARCHITECTURAL STATE OF CALIFORNIA

Exposition Metro Line Construction Authority
Expo

EXPO SKANSKA RADOS

444 South Flower Street
Suite 2200
Los Angeles, CA 90071
TEL (213) 443-7463
FAX (213) 362-9481

PARSONS BRINCKERHOFF

CURRENT STATUS

EXPOSITION LRT PROJECT- PHASE 2
COLORADO/4TH STREET STATION
ENLARGED TICKETING AREA
PLANS, SECTIONS AND ELEVATIONS

CONTRACT NO XP8902-002
DRAWING NO A-S7-113
REV 2
SCALE 1/4" = 1'-0"
SHEET NO

C:\projectwise\pb\projectwise\entjjacobsen\jdms11025\exp02-A-S7-113.dwg
5-May-14 11:40 AM Jacobsen, John J.

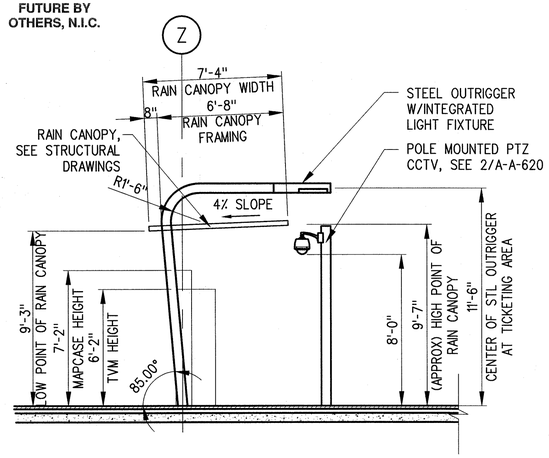

ENLARGED TICKETING AREA #3 SECTION

1/4"=1'-0" C A-S7-114

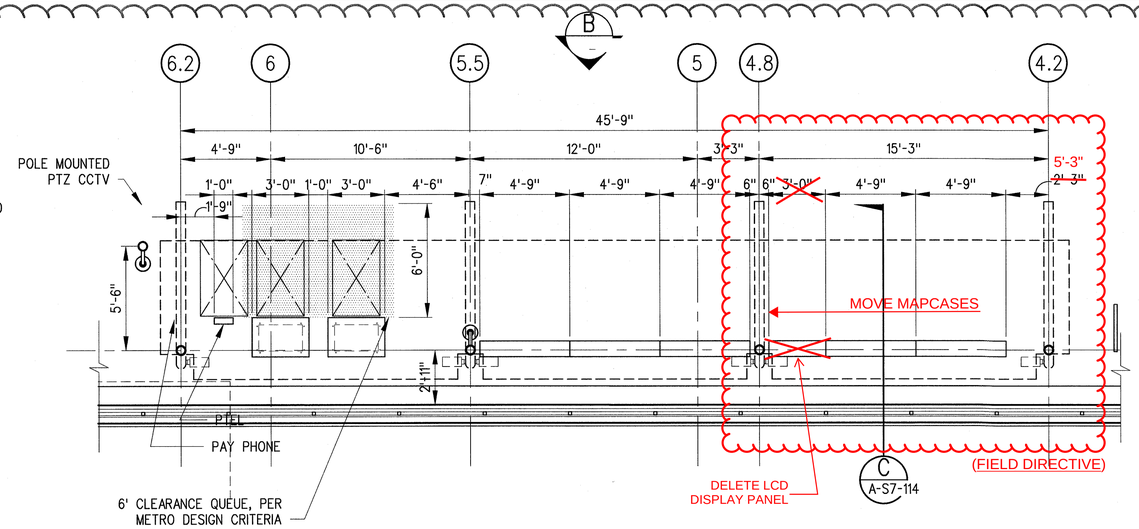

ENLARGED TICKETING AREA #3 PLAN

1/4"=1'-0" 2 A-S7-114

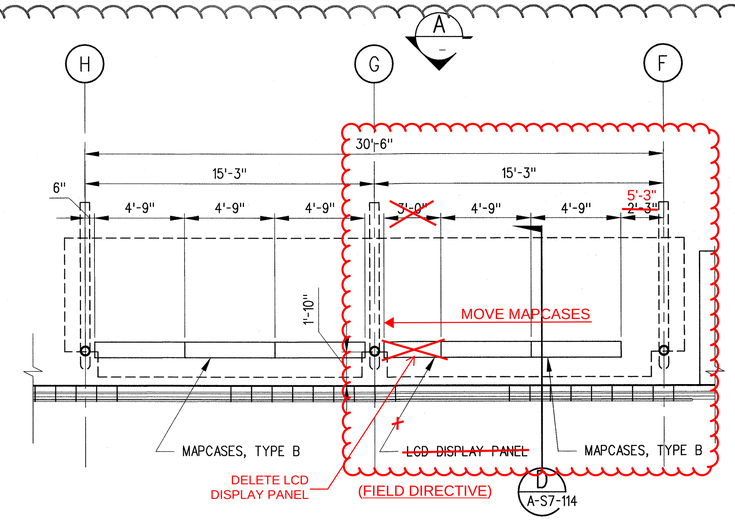

ENLARGED MAPCASE AREA PLAN

1/4"=1'-0" 1 A-S7-114

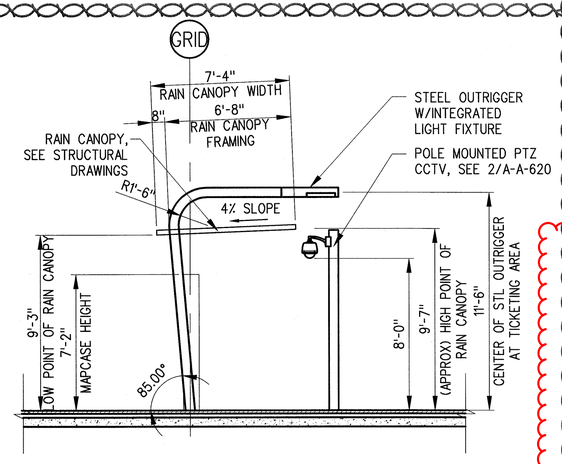

ENLARGED MAPCASE AREA SECTION

1/4"=1'-0" D A-S7-114

FUTURE BY OTHERS, N.I.C.

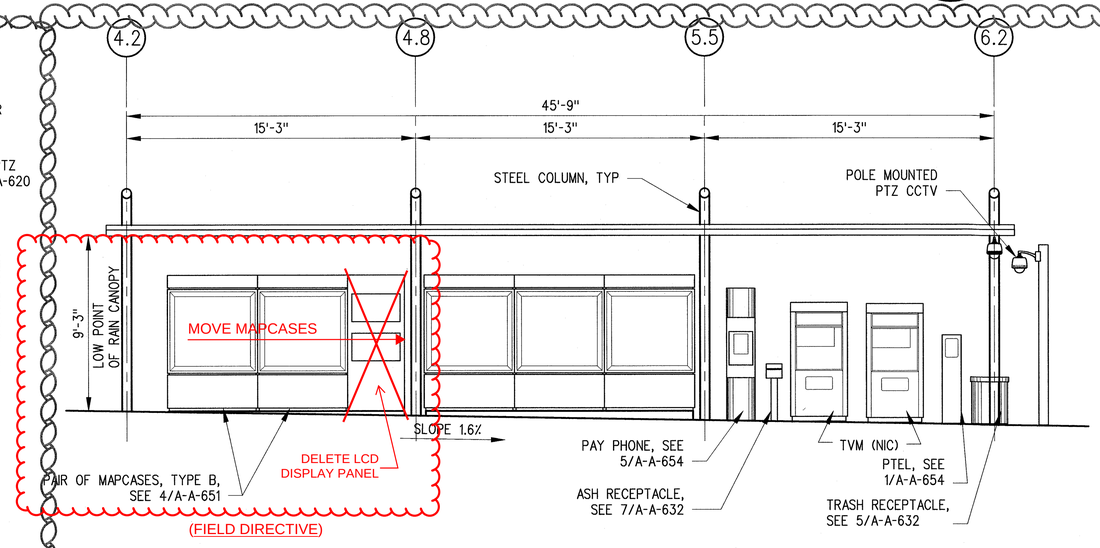

ENLARGED TICKETING AREA #3 ELEVATION

1/4"=1'-0" B A-S7-114

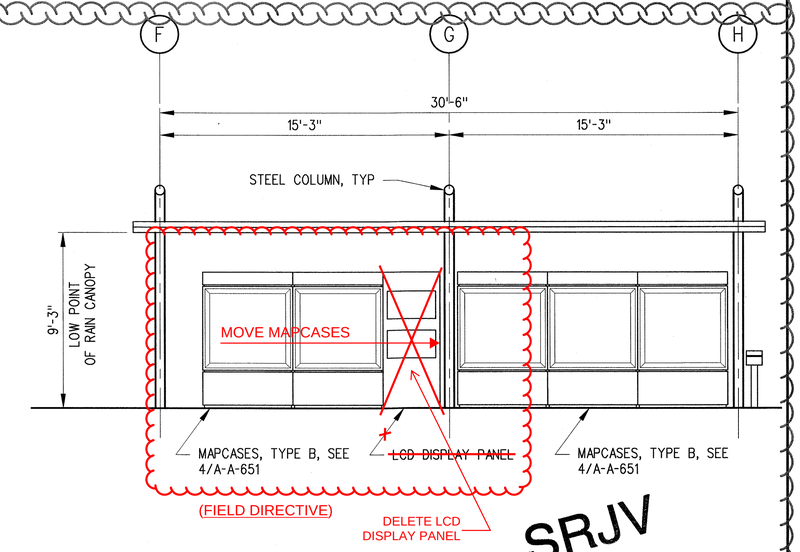

ENLARGED MAPCASE AREA ELEVATION

1/4"=1'-0" A A-S7-114

SRJV
MAR 03 2014
ISSUED FOR CONSTRUCTION

FUTURE BY OTHERS, N.I.C.

4' 2' 0 4' 8'

THE PREPARATION OF THIS DRAWING HAS BEEN FINANCED BY THE TAXES OF THE CITIZENS OF LOS ANGELES COUNTY AND OF THE STATE OF CALIFORNIA.

REV	DATE	BY	APP	REG NO	EXPIRES	SEAL HOLDER	DESCRIPTION
0	1/8/14	JJ	JT	C21914	8/31/15	JOHN TRAUTMANN	ECI 79

DESIGNED BY J. JACOBSEN
DRAWN BY M. KHANBABIAN
CHECKED BY C. SUERO
IN CHARGE J. TRAUTMANN
DATE 5/30/13

LICENSED ARCHITECT JOHN P. TRAUTMANN No. C21914 Exp. 08-31-15 ARCHITECTURAL STATE OF CALIFORNIA

Exposition Metro Line Construction Authority
Expo
Exposition Construction Authority Approved for Construction Drawings - AFC
FEB 28 2014
EXPO SKANSKA RADOS
444 South Flower Street
Suite 2200
Los Angeles, CA 90071
TEL (213) 443-7463
FAX (213) 362-9481
PARSONS BRINCKERHOFF
CURRENT STATUS

EXPOSITION LRT PROJECT- PHASE 2
COLORADO/4TH STREET STATION
ENLARGED TICKETING AREA
PLANS, SECTIONS AND ELEVATIONS

CONTRACT NO XP8902-002
DRAWING NO A-S7-114
REV 0
SCALE 1/4" = 1'-0"
SHEET NO

Jacobsen, John J 8:58 AM 25-Feb-14

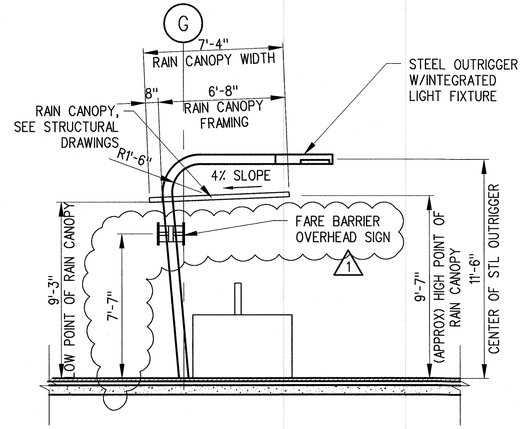

FARE BARRIER SECTION (B / A-S7-115)
1/4"=1'-0"

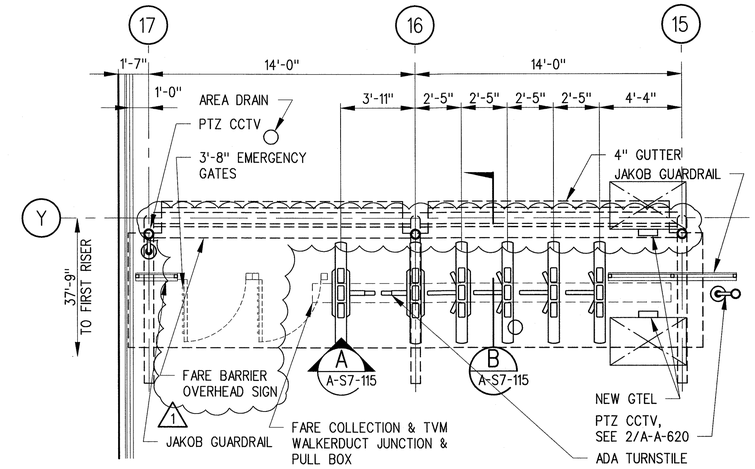

ENLARGED FARE BARRIER PLAN (1 / A-S7-115)
1/4"=1'-0"

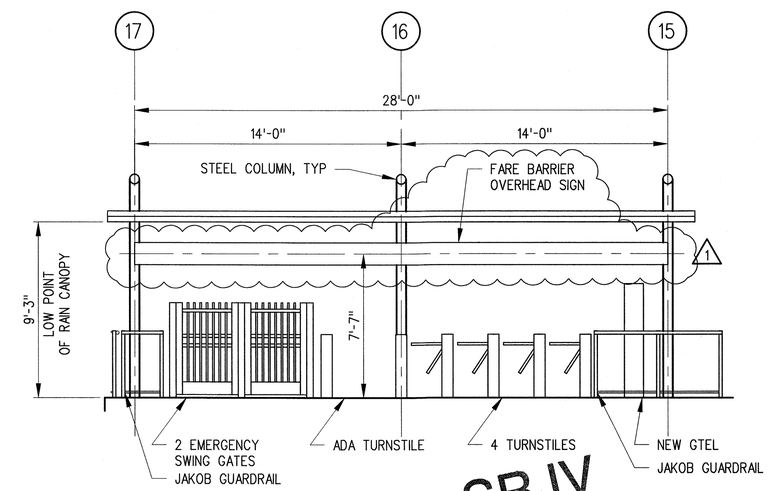

SRJV
JUL 25 2014
ISSUED FOR CONSTRUCTION

FARE BARRIER ELEVATION (A / A-S7-115)
1/4"=1'-0"

Exposition Construction Authority
Approved for Construction
Drawings - AFC
JUL 24 2014

4' 2' 0 4' 8'

THE PREPARATION OF THIS DRAWING HAS BEEN FINANCED BY THE TAXES OF THE CITIZENS OF LOS ANGELES COUNTY AND OF THE STATE OF CALIFORNIA.

REV	DATE	BY	APP	REG NO	EXPIRES	SEAL HOLDER	DESCRIPTION
1	4/30/14	JJ	JT	C21914	8/31/15	JOHN TRAUTMANN	ECI 99
0	1/8/14	JJ	JT	C21914	8/31/15	JOHN TRAUTMANN	ECI 79

DESIGNED BY J. JACOBSEN
DRAWN BY M. KHANBABIAN
CHECKED BY C. SUERO
IN CHARGE J. TRAUTMANN
DATE 1/8/14

LICENSED ARCHITECT — JOHN P. TRAUTMANN — No. C21914 — Exp. 08-31-15 — ARCHITECTURAL — STATE OF CALIFORNIA

Exposition Metro Line Construction Authority
Expo
EXPO SKANSKA RADOS

444 South Flower Street
Suite 2200
Los Angeles, CA 90071
TEL (213) 443-7463
FAX (213) 362-9481

PARSONS BRINCKERHOFF

CURRENT STATUS

EXPOSITION LRT PROJECT- PHASE 2
COLORADO/4TH STREET STATION
ENLARGED FARE BARRIER
PLANS, SECTIONS AND ELEVATIONS

CONTRACT NO XP8902-002
DRAWING NO A-S7-115
REV 1
SCALE 1/4" = 1'-0"
SHEET NO

C:\projectwise\pb\projectwise\ntjacobsenj\dms11025\expo2-A-S7-115.dwg
5-May-14 11:35 AM Jacobsen, John J.

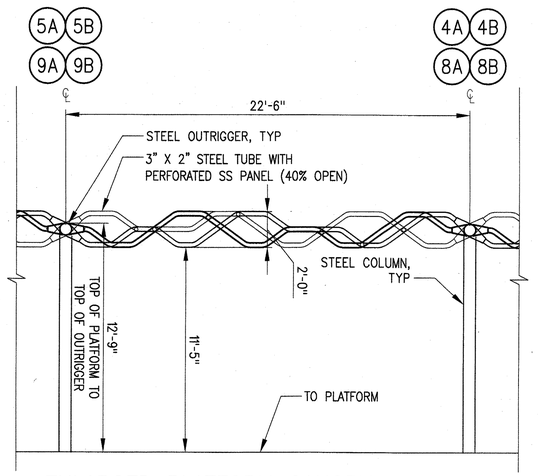

ENLARGED PLATFORM CANOPY ELEVATION ORIENTATION 4 (D / A-S7-121)
1/4"=1'-0"

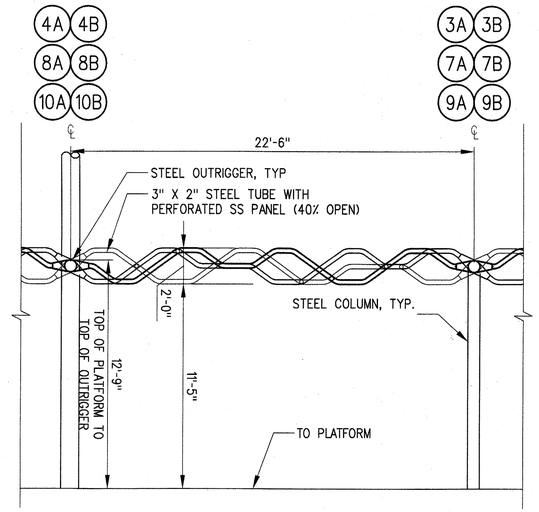

ENLARGED PLATFORM CANOPY ELEVATION ORIENTATION 3 (C / A-S7-121)
1/4"=1'-0"

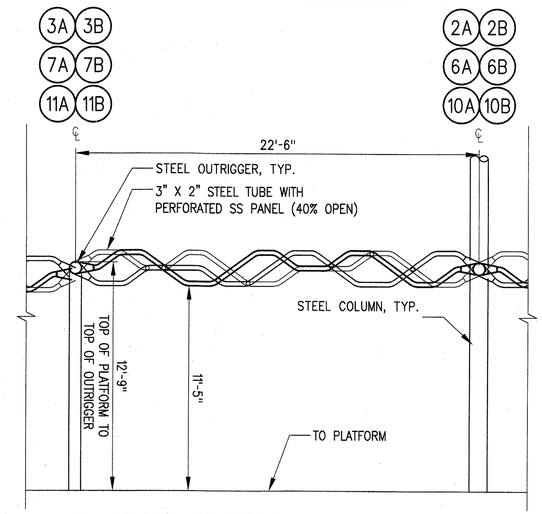

ENLARGED PLATFORM CANOPY ELEVATION ORIENTATION 2 (B / A-S7-121)
1/4"=1'-0"

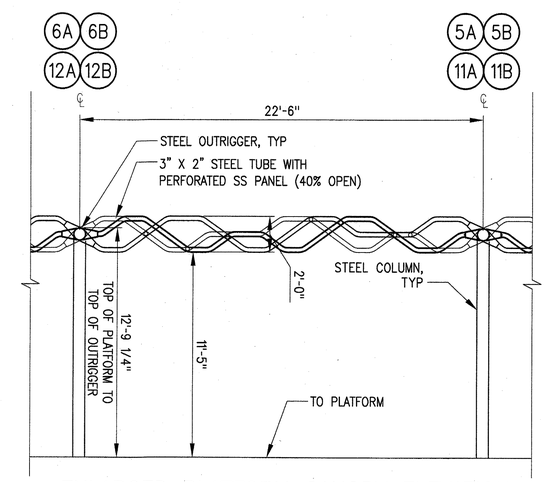

ENLARGED PLATFORM CANOPY ELEVATION ORIENTATION 1 (A / A-S7-121)
1/4"=1'-0"

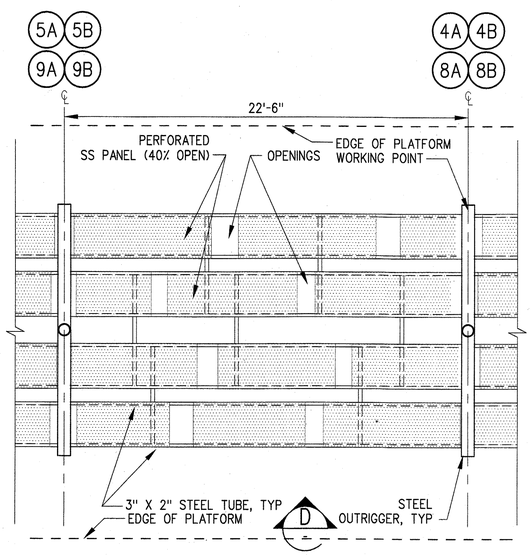

ENLARGED PLATFORM CANOPY PLAN ORIENTATION 4 (D / A-S7-121)
1/4"=1'-0"
A-S7-151 A-S7-152

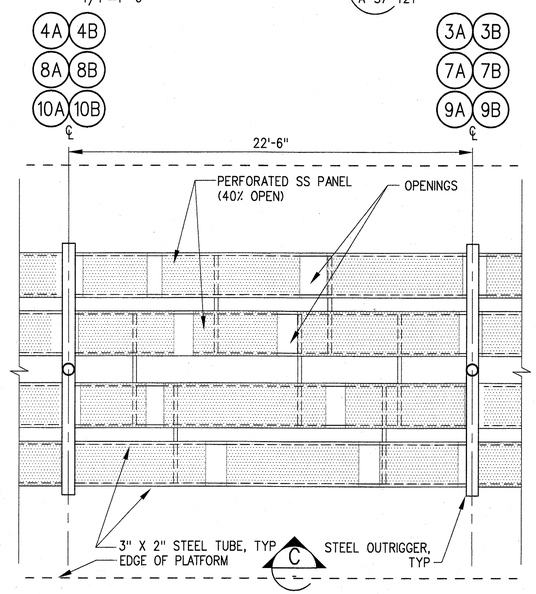

ENLARGED PLATFORM CANOPY PLAN ORIENTATION 3 (C / A-S7-121)
1/4"=1'-0"
A-S7-151 A-S7-152

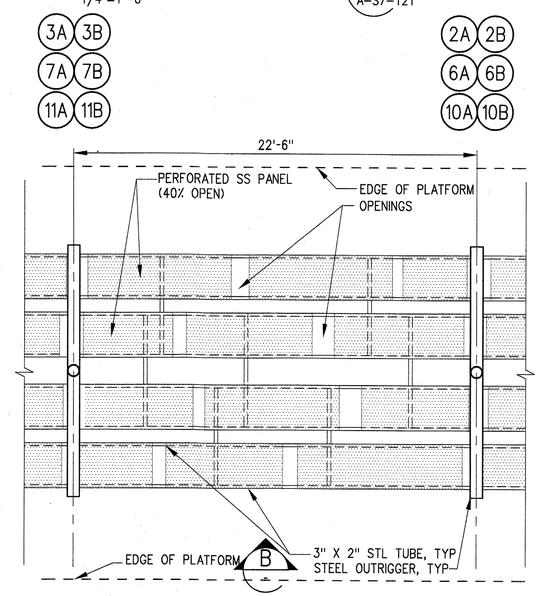

ENLARGED PLATFORM CANOPY PLAN ORIENTATION 2 (B / A-S7-121)
1/4"=1'-0"
A-S7-151 A-S7-152

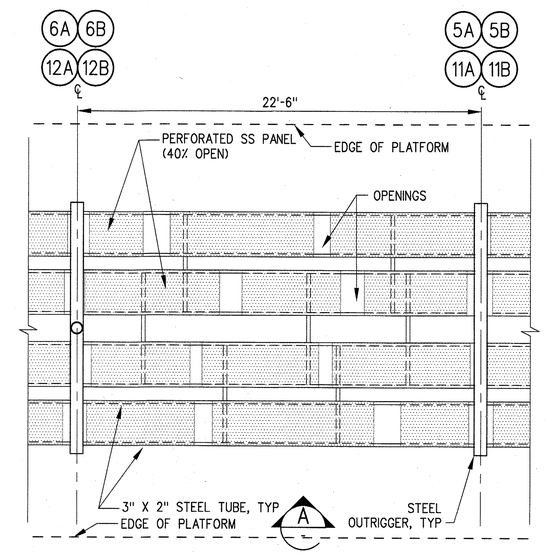

ENLARGED PLATFORM CANOPY PLAN ORIENTATION 1 (A / A-S7-121)
1/4"=1'-0"
A-S7-151 A-S7-152

13 12 11 10 9 8 7 6 5 4 3 2 1

SRJV
JUN 24 2013
ISSUED FOR CONSTRUCTION

C:\Users\khanbabian\Desktop\sheet-pop\expo2-A-S7-121.dwg
29-May-13 9:05 AM Khanbabian, Melineh

THE PREPARATION OF THIS DRAWING HAS BEEN FINANCED BY THE TAXES OF THE CITIZENS OF LOS ANGELES COUNTY AND OF THE STATE OF CALIFORNIA.

REV	DATE	BY	APP	REG NO	EXPIRES	SEAL HOLDER	DESCRIPTION
0	5/30/13	CS	JT	C21914	8/31/13	JOHN TRAUTMANN	APPROVED FOR CONSTRUCTION

DESIGNED BY J. JACOBSEN
DRAWN BY M. KHANBABIAN
CHECKED BY C. SUERO
IN CHARGE J. TRAUTMANN
DATE 5/30/13

LICENSED ARCHITECT JOHN P. TRAUTMANN No. C21914 Exp. 08-31-13 ARCHITECTURAL STATE OF CALIFORNIA

Exposition Metro Line Construction Authority
Expo
Exposition Construction Authority Approved for Construction Drawings - AFC
JUN 21 2013
PARSONS BRINCKERHOFF
CURRENT STATUS

EXPO SKANSKA RADOS
444 South Flower Street
Suite 2200
Los Angeles, CA 90071
TEL (213) 443-7463
FAX (213) 362-9481

EXPOSITION LRT PROJECT- PHASE 2
COLORADO/4TH STREET STATION
CANOPY PLANS AND ELEVATIONS

CONTRACT NO XP8902-002
DRAWING NO A-S7-121
REV 0
SCALE 1/4" = 1'-0"
SHEET NO

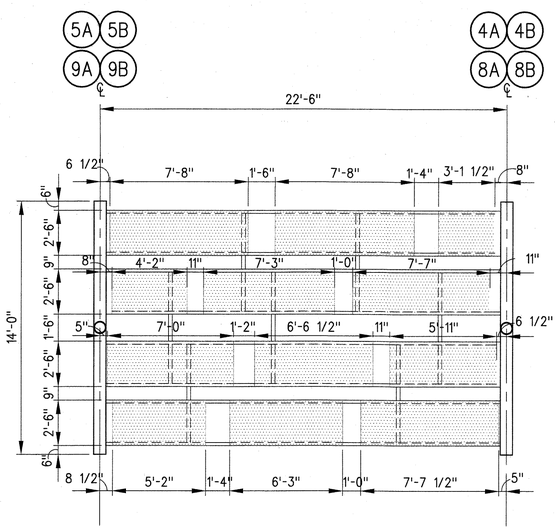

CANOPY ROOF PANEL
ORIENTATION 4

1/4"=1'-0"

4 / A-S7-122

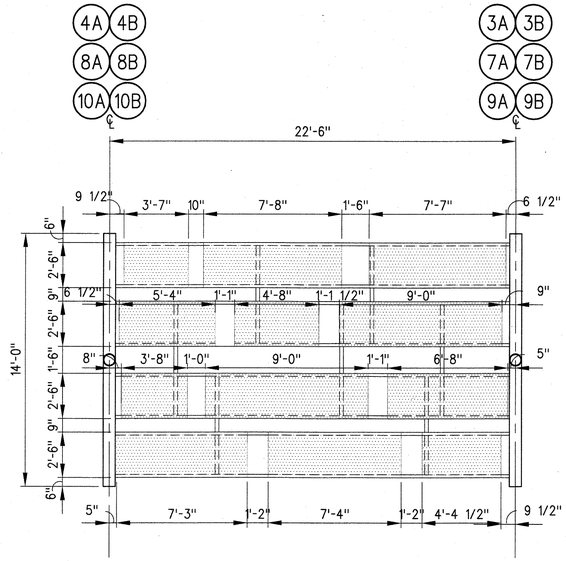

CANOPY ROOF PANEL
ORIENTATION 3

1/4"=1'-0"

3 / A-S7-122

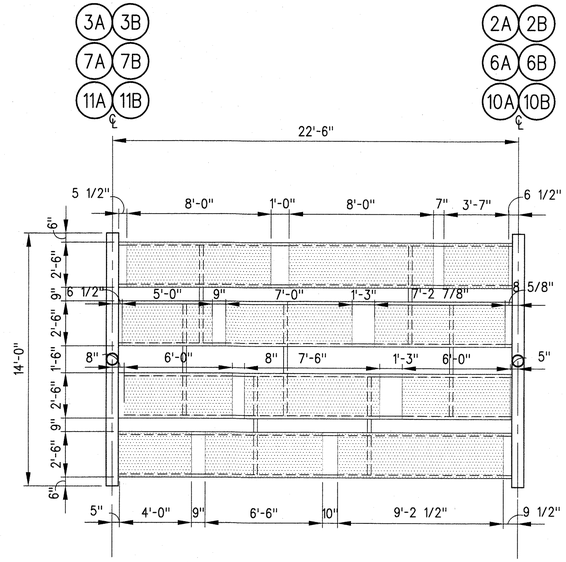

CANOPY ROOF PANEL
ORIENTATION 2

1/4"=1'-0"

2 / A-S7-122

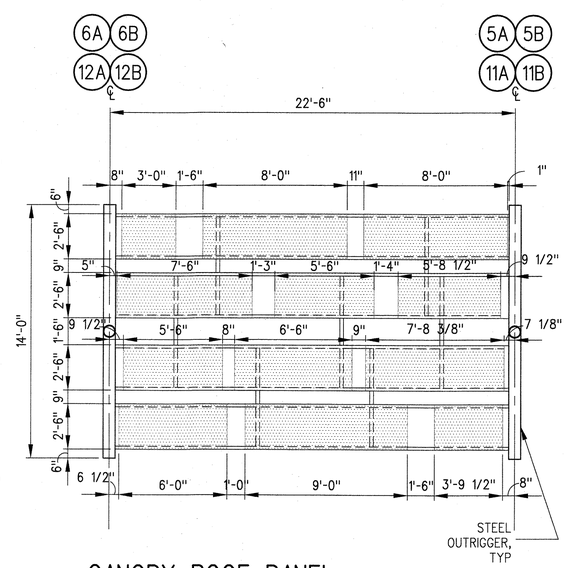

CANOPY ROOF PANEL
ORIENTATION 1

1/4"=1'-0"

1 / A-S7-122

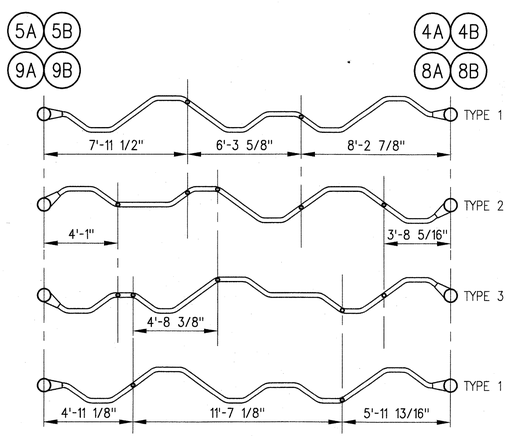

CANOPY STEEL TUBE LAYOUT
ORIENTATION 4

1/4"=1'-0"

4A / A-S7-122

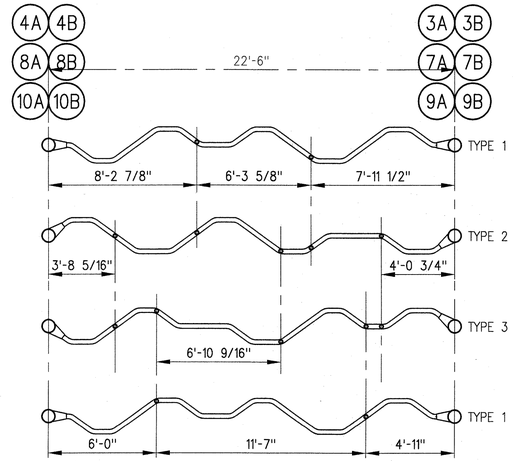

CANOPY STEEL TUBE LAYOUT
ORIENTATION 3

1/4"=1'-0"

3A / A-S7-122

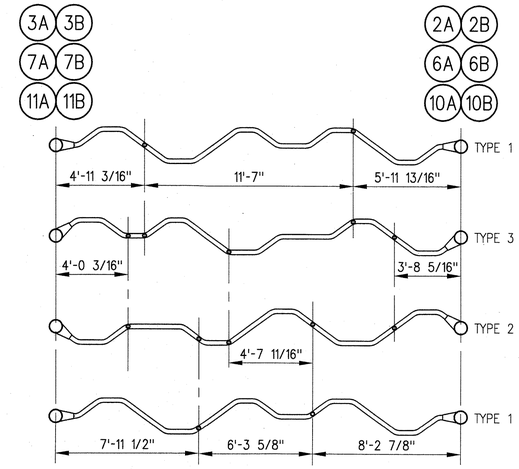

CANOPY STEEL TUBE LAYOUT
ORIENTATION 2

1/4"=1'-0"

2A / A-S7-122

SRJV
JUN 24 2013
ISSUED FOR CONSTRUCTION

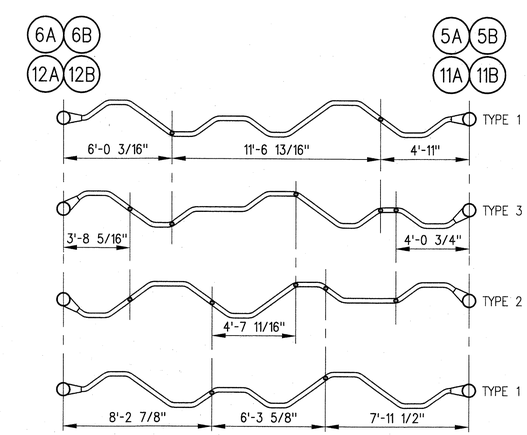

CANOPY STEEL TUBE LAYOUT
ORIENTATION 1

1/4"=1'-0"

1A / A-S7-122

THE PREPARATION OF THIS DRAWING HAS BEEN FINANCED BY THE TAXES OF THE CITIZENS OF LOS ANGELES COUNTY AND OF THE STATE OF CALIFORNIA.

REV	DATE	BY	APP	REG NO	EXPIRES	SEAL HOLDER	DESCRIPTION
0	5/30/13	CS	JT	C21914	8/31/13	JOHN TRAUTMANN	APPROVED FOR CONSTRUCTION

DESIGNED BY J. JACOBSEN
DRAWN BY M. KHANBABIAN
CHECKED BY C. SUERO
IN CHARGE J. TRAUTMANN
DATE 5/30/13

LICENSED ARCHITECT JOHN P. TRAUTMANN No. C21914 Exp. 08-31-13 ARCHITECTURAL STATE OF CALIFORNIA

Exposition Metro Line Construction Authority
Expo

Exposition Construction Authority Approved for Construction Drawings - AFC

EXPO SKANSKA RADOS

444 South Flower Street
Suite 2200
Los Angeles, CA 90071
TEL (213) 443-7463
FAX (213) 362-9481

PARSONS BRINCKERHOFF JUN 21 2013

CURRENT STATUS

EXPOSITION LRT PROJECT- PHASE 2
COLORADO/4TH STREET STATION
CANOPY ORIENTATION LAYOUTS

CONTRACT NO XP8902-002
DRAWING NO A-S7-122
REV 0
SCALE 1/4" = 1'-0"
SHEET NO

C:\Users\khanbabian\Desktop\sheet-pop\expo2-A-S7-122.dwg
29-May-13 9:05 AM Khanbabian, Meilinah

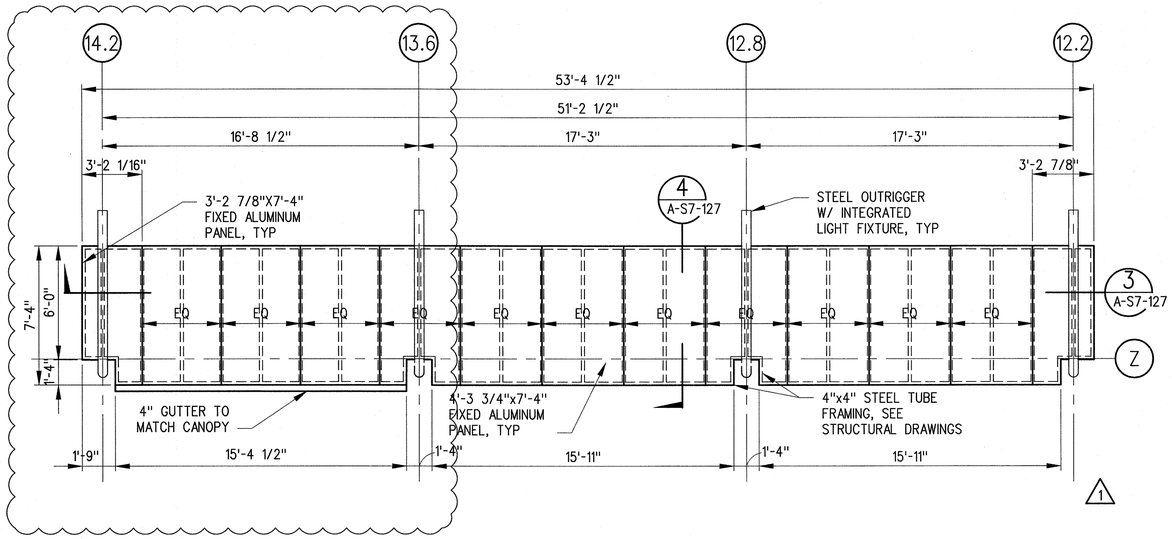

TICKETING AREA #1 RAIN CANOPY ROOF PLAN

1/4"=1'-0"

3 A-S7-125

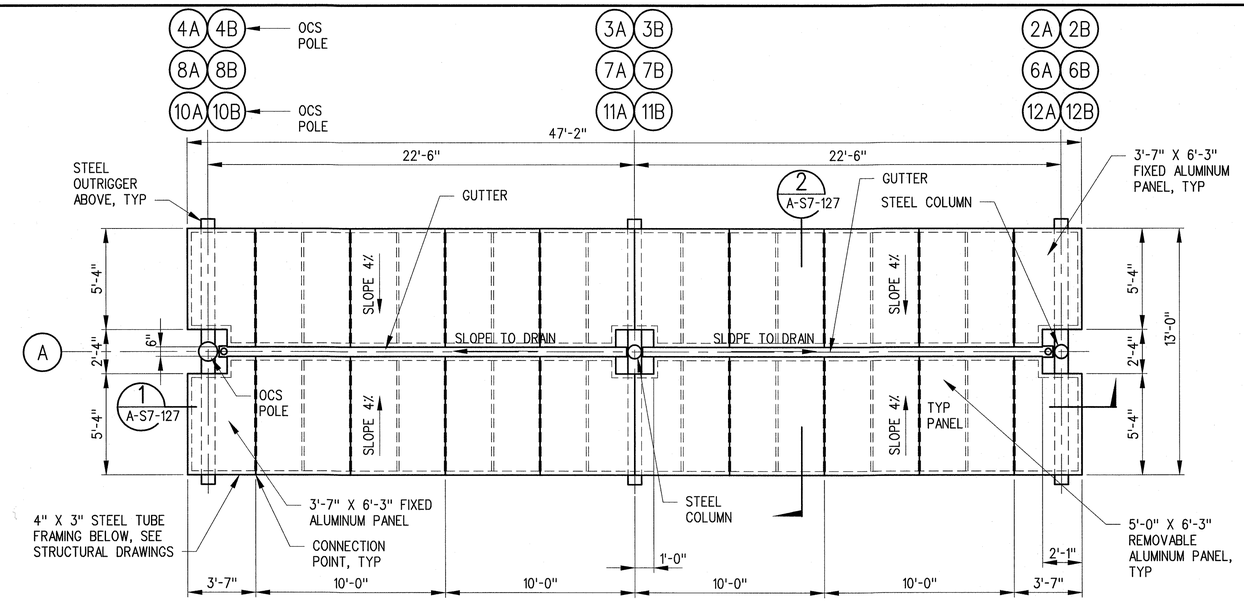

PLATFORM RAIN CANOPY ROOF PLAN

1/4"=1'-0"

1 A-S7-125

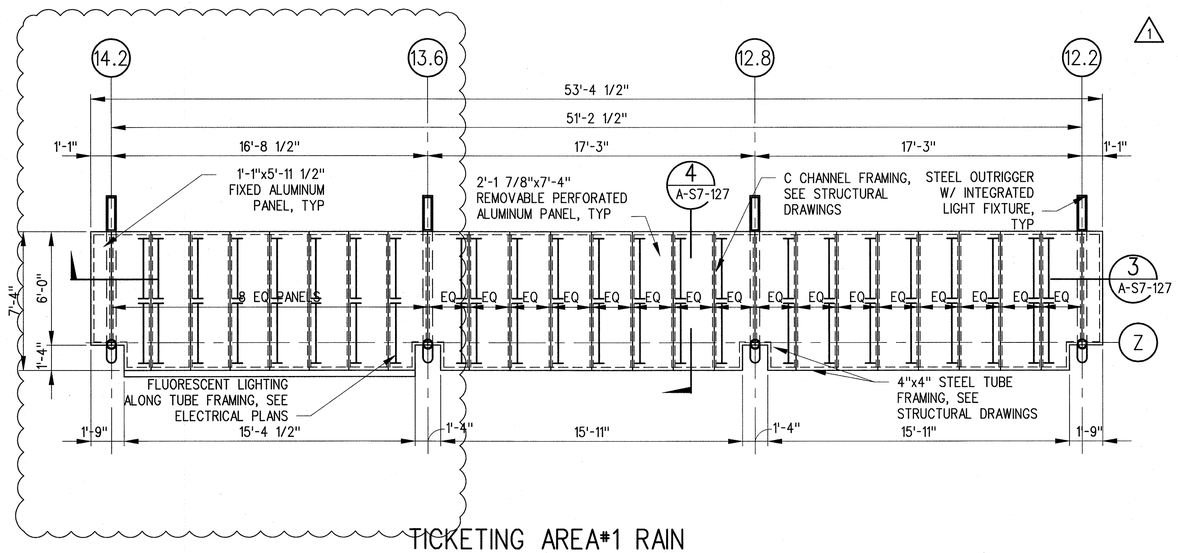

TICKETING AREA#1 RAIN CANOPY REFLECTED CEILING PLAN

1/4"=1'-0"

4 A-S7-125

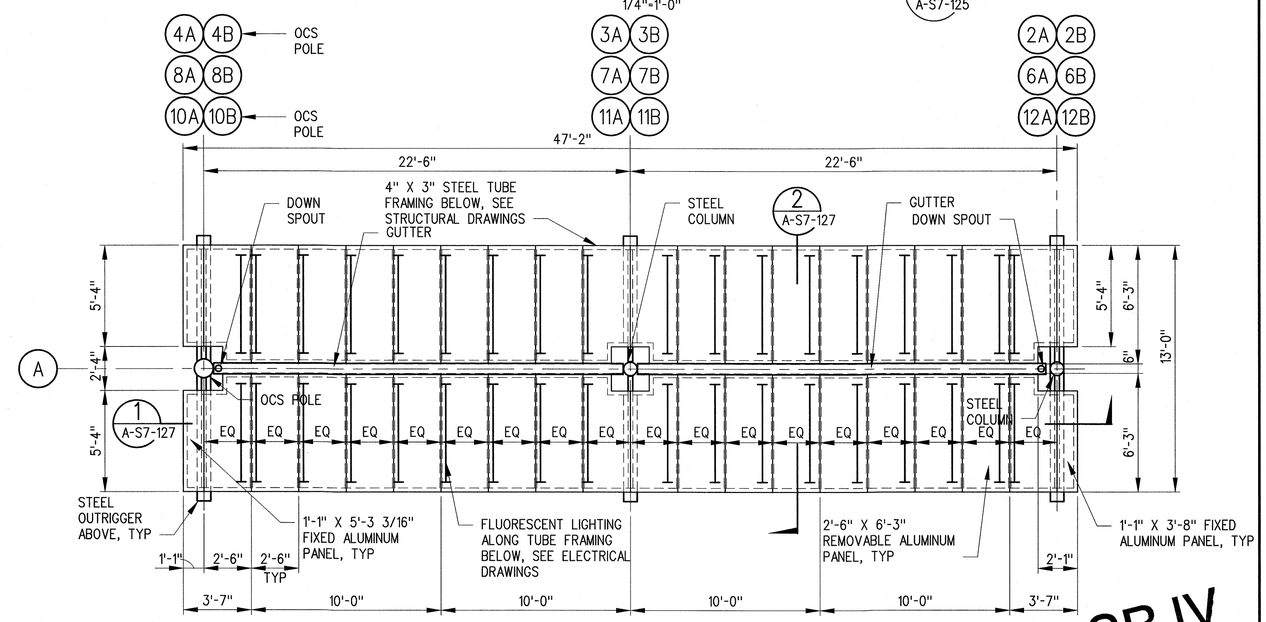

PLATFORM RAIN CANOPY REFLECTED CEILING PLAN

1/4"=1'-0"

2 A-S7-125 A-S7-141 A-S7-142

4' 2' 0 4' 8'

SRJV
MAR 03 2014
ISSUED FOR CONSTRUCTION

THE PREPARATION OF THIS DRAWING HAS BEEN FINANCED BY THE TAXES OF THE CITIZENS OF LOS ANGELES COUNTY AND OF THE STATE OF CALIFORNIA.

REV	DATE	BY	APP	REG NO	EXPIRES	SEAL HOLDER	DESCRIPTION
1	1/8/14	JJ	JT	C21914	8/31/15	JOHN TRAUTMANN	ECI 79
0	5/30/13	CS	JT	C21914	8/31/13	JOHN TRAUTMANN	APPROVED FOR CONSTRUCTION

DESIGNED BY J. JACOBSEN
DRAWN BY M. KHANBABIAN
CHECKED BY C. SUERO
IN CHARGE J. TRAUTMANN
DATE 5/30/13

LICENSED ARCHITECT JOHN P. TRAUTMANN No. C21914 Exp. 08-31-15 ARCHITECTURAL STATE OF CALIFORNIA

Exposition Metro Line Construction Authority
Expo
Exposition Construction Authority Approved for Construction Drawings - AFC
FEB 28 2014
EXPO SKANSKA RADOS
444 South Flower Street
Suite 2200
Los Angeles, CA 90071
TEL (213) 443-7463
FAX (213) 362-9481
PARSONS BRINCKERHOFF
CURRENT STATUS

EXPOSITION LRT PROJECT- PHASE 2
COLORADO/4TH STREET STATION
RAIN CANOPY PLANS
SHEET 1 OF 2

CONTRACT NO XP8902-002
DRAWING NO A-S7-125
REV 1
SCALE 1/4" = 1'-0"
SHEET NO

C:\Users\jacobsenj\Documents\Expo2\PDF\ECI79\expo2-A-S7-125.dwg
11-Feb-14 2:44 PM
Jacobsen, John J.

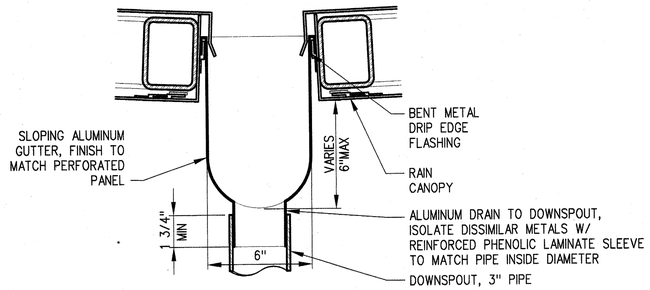

GUTTER DETAIL 3 / A-S7-126
3"=1'-0"

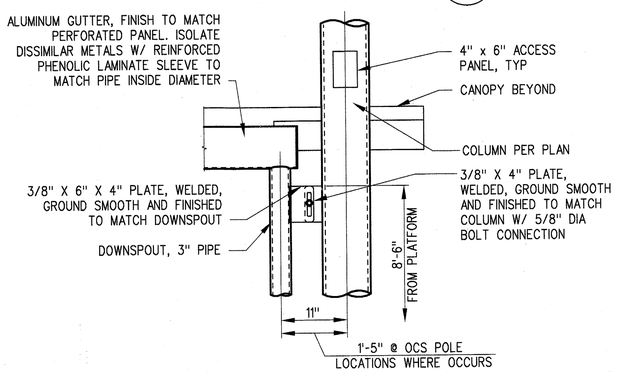

GUTTER/DOWNSPOUT DETAIL 4 / A-S7-126
1"=1'-0"

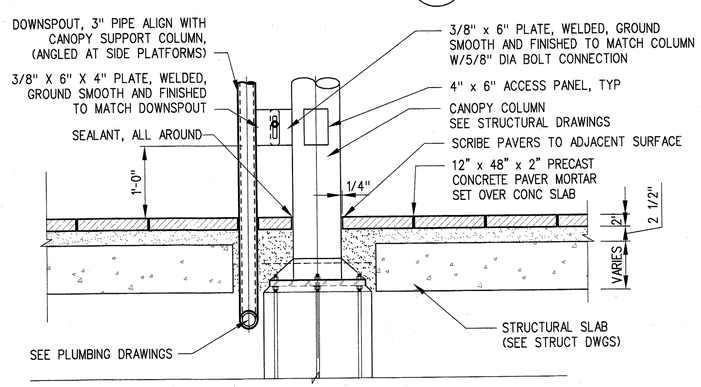

GUTTER/DOWNSPOUT BASE DETAIL 5 / A-S7-126
1"=1'-0"

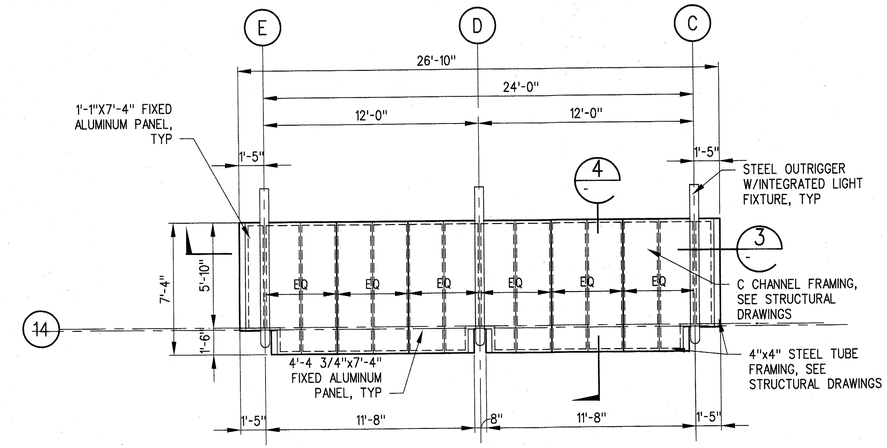

TICKETING AREA #2 RAIN CANOPY ROOF PLAN 1 / A-S7-126
1/4"=1'-0"

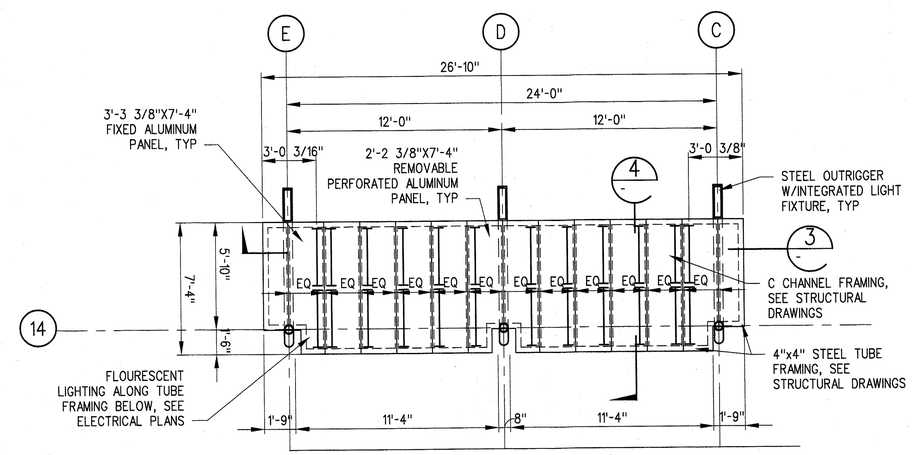

TICKETING AREA #2 RAIN CANOPY REFLECTED CEILING PLAN 2 / A-S7-126
1/4"=1'-0"

4' 2' 0 4' 8'

SRJV
JUN 24 2013
ISSUED FOR CONSTRUCTION

THE PREPARATION OF THIS DRAWING HAS BEEN FINANCED BY THE TAXES OF THE CITIZENS OF LOS ANGELES COUNTY AND OF THE STATE OF CALIFORNIA.

REV	DATE	BY	APP	REG NO	EXPIRES	SEAL HOLDER	DESCRIPTION
0	5/30/13	CS	JT	C21914	8/31/13	JOHN TRAUTMANN	APPROVED FOR CONSTRUCTION

DESIGNED BY J. JACOBSEN
DRAWN BY M. KHANBABIAN
CHECKED BY C. SUERO
IN CHARGE J. TRAUTMANN
DATE 5/30/13

LICENSED ARCHITECT JOHN P. TRAUTMANN No. C21914 Exp. 08-31-13 ARCHITECTURAL STATE OF CALIFORNIA

Exposition Metro Line Construction Authority
Expo
Exposition Construction Authority Approved for Construction Drawings - AFC
EXPO SKANSKA RADOS
444 South Flower Street Suite 2200 Los Angeles, CA 90071 TEL (213) 443-7463 FAX (213) 362-9481
PARSONS BRINCKERHOFF
JUN 21 2013
CURRENT STATUS

EXPOSITION LRT PROJECT- PHASE 2
COLORADO/4TH STREET STATION
RAIN CANOPY PLANS
SHEET 2 OF 2

CONTRACT NO XP8902-002
DRAWING NO A-S7-126
REV 0
SCALE 1/4" = 1'-0"
SHEET NO

C:\Users\khanbabianm\Desktop\sheet-pop\expo2-A-S7-126.dwg
29-May-13 9:06 AM Khanbabian, Melineh

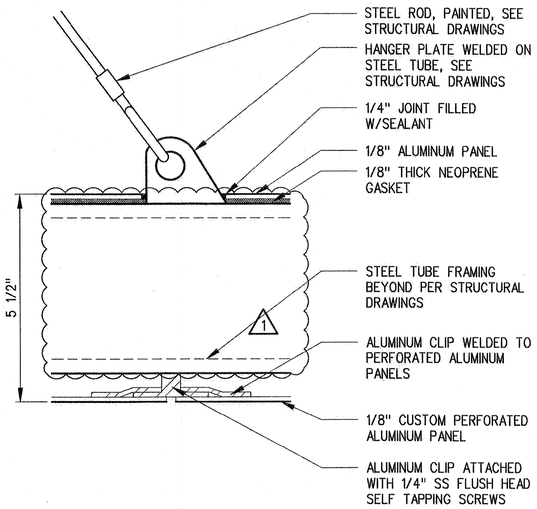

RAIN CANOPY
TYP HANGER DETAIL 7 A-S7-127
6"=1'-0"

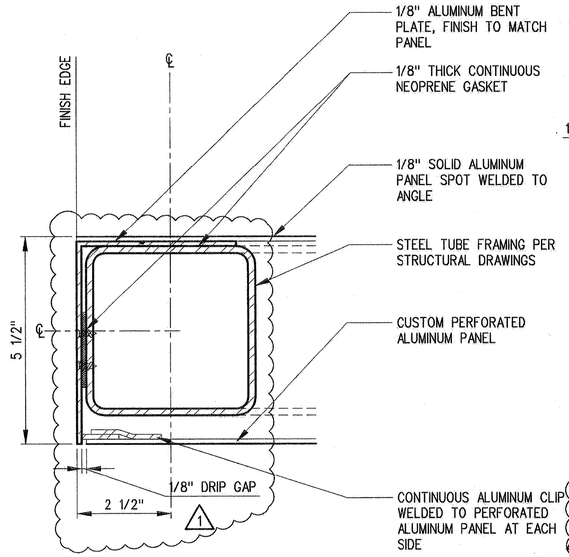

RAIN CANOPY
TYP EDGE DETAIL 5 A-S7-127
6"=1'-0"

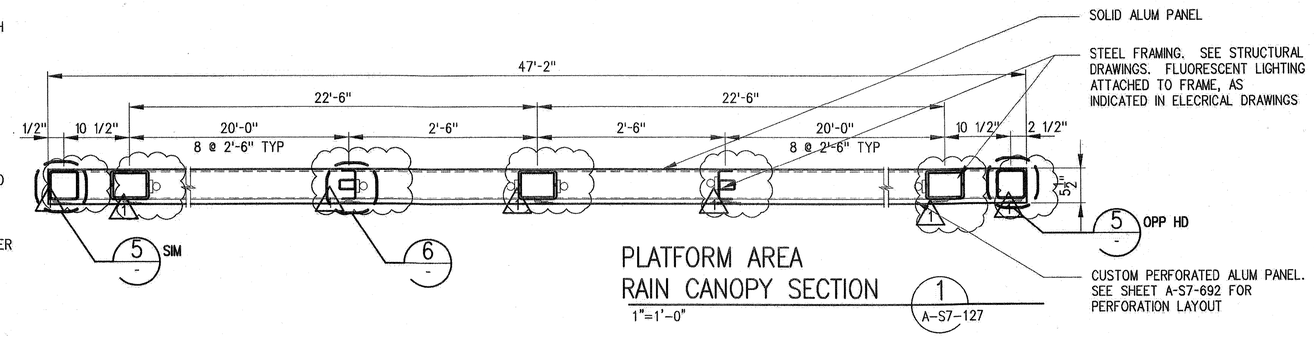

PLATFORM AREA
RAIN CANOPY SECTION 1 A-S7-127
1"=1'-0"

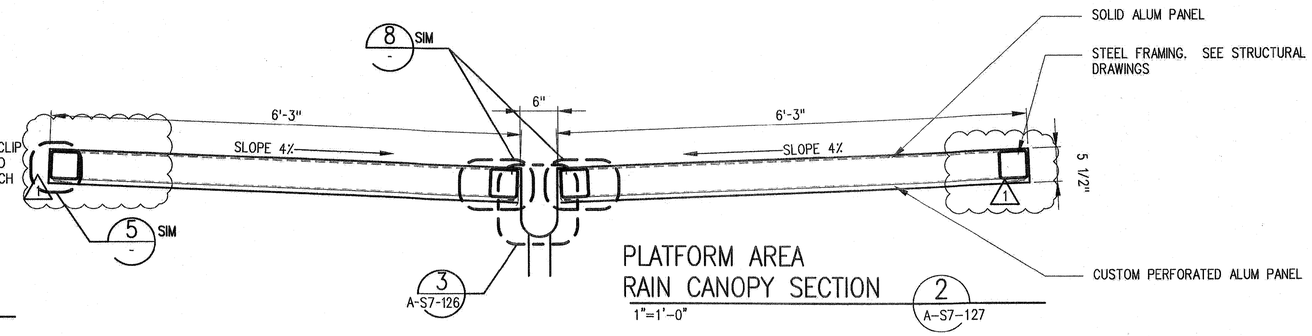

PLATFORM AREA
RAIN CANOPY SECTION 2 A-S7-127
1"=1'-0"

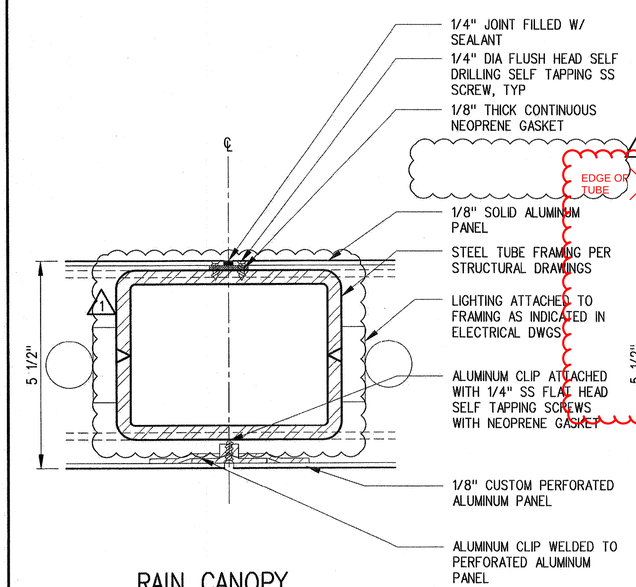

RAIN CANOPY
REAR EDGE DETAIL 8 A-S7-127
6"=1'-0"

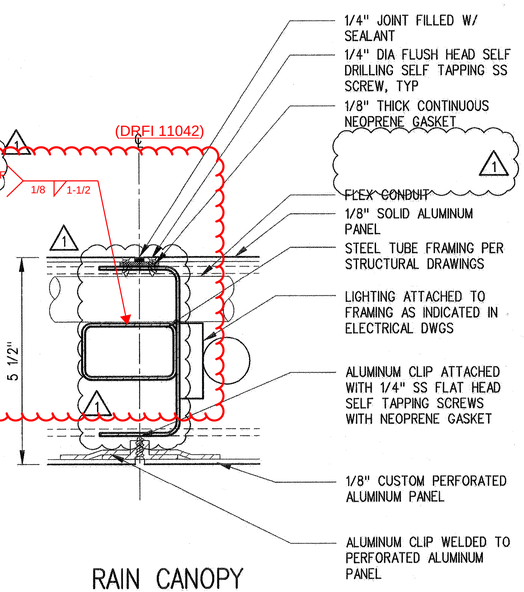

RAIN CANOPY
TYP SECTION DETAIL 6 A-S7-127
6"=1'-0"

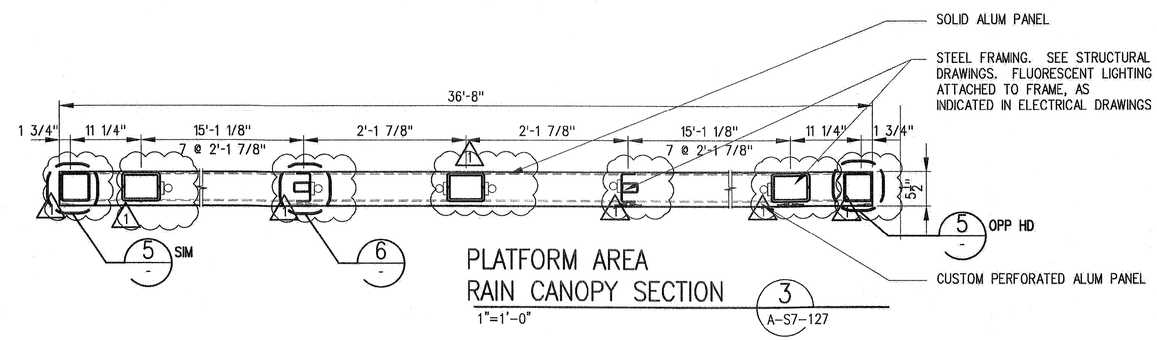

PLATFORM AREA
RAIN CANOPY SECTION 3 A-S7-127
1"=1'-0"

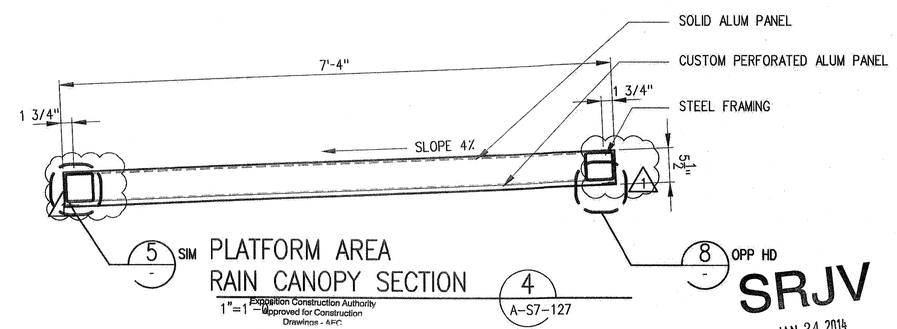

PLATFORM AREA
RAIN CANOPY SECTION 4 A-S7-127
1"=1'-0"

Exposition Construction Authority
Approved for Construction
Drawings - AFC
JAN 23 2014

SRJV
JAN 24 2014
ISSUED FOR CONSTRUCTION

THE PREPARATION OF THIS DRAWING HAS BEEN FINANCED BY THE TAXES OF THE CITIZENS OF LOS ANGELES COUNTY AND OF THE STATE OF CALIFORNIA.

REV	DATE	BY	APP	REG NO	EXPIRES	SEAL HOLDER	DESCRIPTION
1	7/25/13	JJ	JT	C21914	8/31/13	JOHN TRAUTMANN	ECI 17
0	5/30/13	CS	JT	C21914	8/31/13	JOHN TRAUTMANN	APPROVED FOR CONSTRUCTION

DESIGNED BY J. JACOBSEN
DRAWN BY M. KHANBABIAN
CHECKED BY C. SUERO
IN CHARGE J. TRAUTMANN
DATE 7/25/13

LICENSED ARCHITECT JOHN P. TRAUTMANN No. C21914 Exp. 08-31-13 ARCHITECTURAL STATE OF CALIFORNIA

Exposition Metro Line Construction Authority
Expo
EXPO SKANSKA RADOS
444 South Flower Street
Suite 2200
Los Angeles, CA 90071
TEL (213) 443-7463
FAX (213) 362-9481
PARSONS BRINCKERHOFF

EXPOSITION LRT PROJECT- PHASE 2
COLORADO/4TH STREET STATION
RAIN CANOPY
TYPICAL DETAILS

CONTRACT NO XP8902-002
DRAWING NO A-S7-127
REV 1
SCALE AS NOTED
SHEET NO

CURRENT STATUS

C:\projectwise\pb\projects\wisem\jacobsenjj\dms11025\exmc2-A-S7-127.dwg
Jacobsen, John J. 19-Aug-13 4:26 PM

C:\projectwise\pb\projectwisemtl\jacobsenjj\dms11025\expo2-A-S7-128.dwg

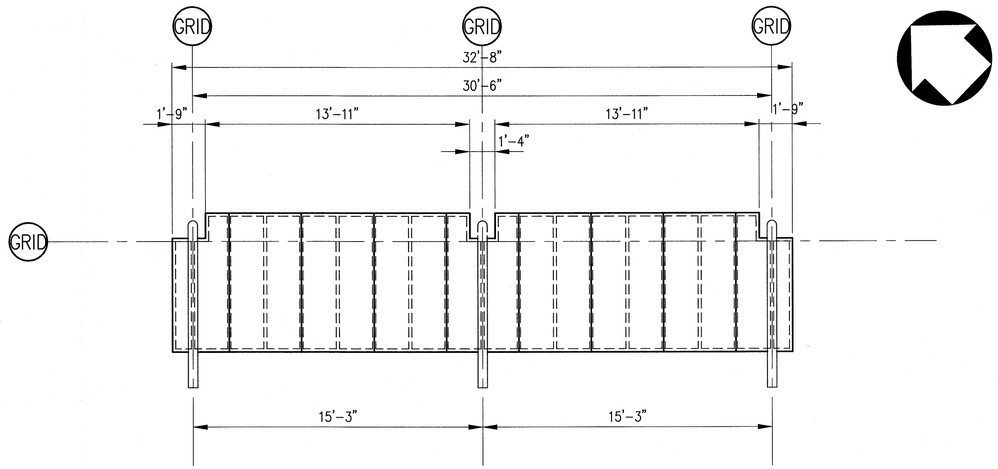

MAP CASE RAIN
CANOPY ROOF PLAN (3 / A-S7-128)
1/4"=1'-0"

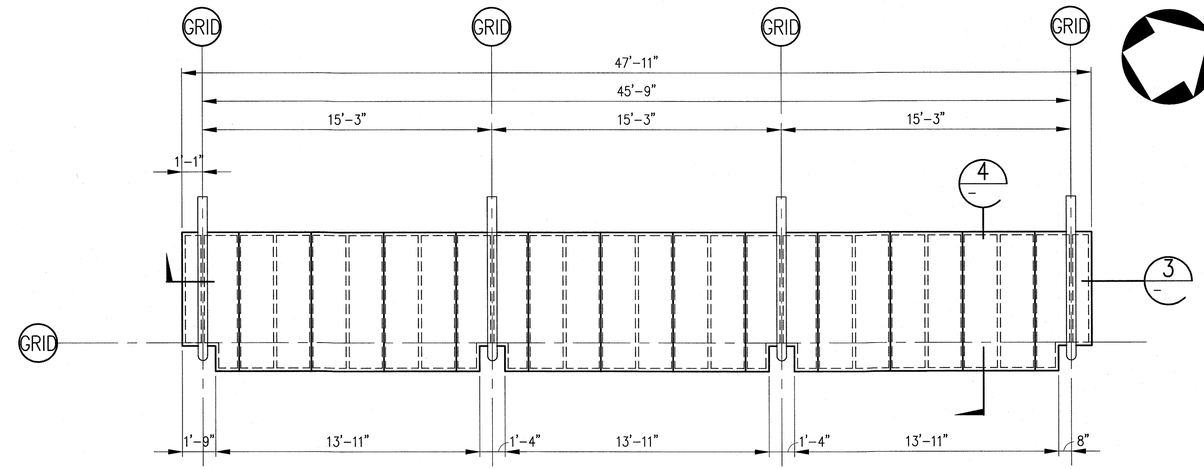

TICKETING AREA #3 RAIN
CANOPY ROOF PLAN (1 / A-S7-128)
1/4"=1'-0"

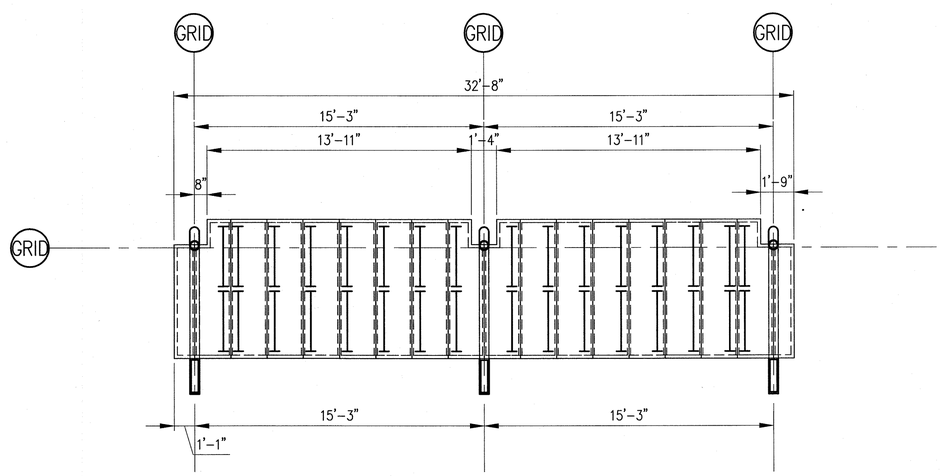

MAP CASE RAIN CANOPY
REFLECTED
CEILING PLAN (4 / A-S7-128)
1/4"=1'-0"

FUTURE BY
OTHERS, N.I.C.

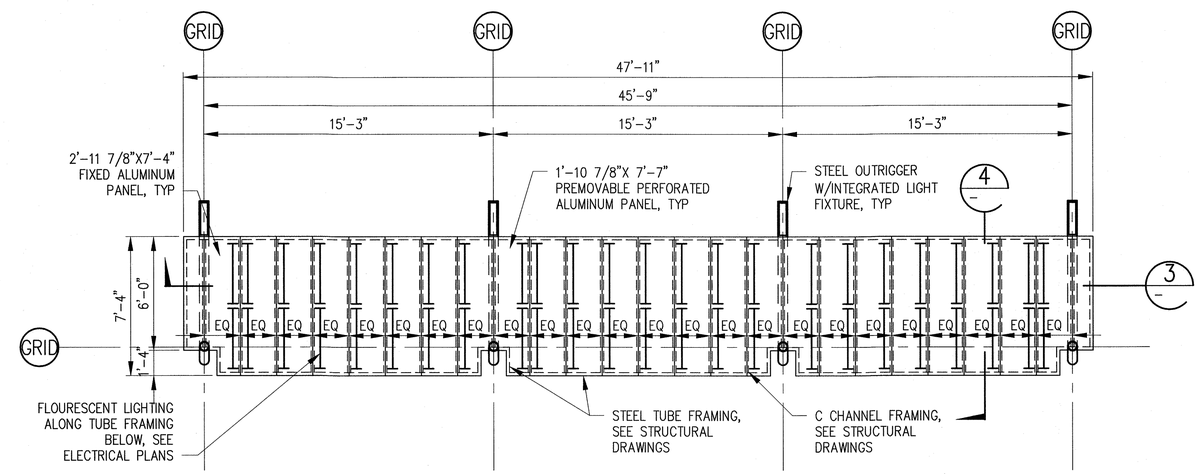

TICKETING AREA #3 RAIN
CANOPY REFLECTED
CEILING PLAN (2 / A-S7-128)
1/4"=1'-0"

SRJV
MAR 03 2014
ISSUED FOR
CONSTRUCTION

4' 2' 0 4' 8'

THE PREPARATION OF THIS DRAWING HAS BEEN FINANCED BY THE TAXES OF THE CITIZENS OF LOS ANGELES COUNTY AND OF THE STATE OF CALIFORNIA.

REV	DATE	BY	APP	REG NO	EXPIRES	SEAL HOLDER	DESCRIPTION
0	1/8/14	JJ	JT	C21914	8/31/15	JOHN TRAUTMANN	ECI 79

DESIGNED BY J. JACOBSEN
DRAWN BY M. KHANBABIAN
CHECKED BY C. SUERO
IN CHARGE J. TRAUTMANN
DATE 1/8/14

LICENSED ARCHITECT — JOHN P. TRAUTMANN — No. C21914 — Exp. 08-31-15 — ARCHITECTURAL — STATE OF CALIFORNIA

Exposition Metro Line Construction Authority
Expo
Exposition Construction Authority
Approved for Construction
Drawings - AFC
FEB 28 2014

SKANSKA RADOS
444 South Flower Street
Suite 2200
Los Angeles, CA 90071
TEL (213) 443-7463
FAX (213) 362-9481

PARSONS BRINCKERHOFF

CURRENT STATUS

EXPOSITION LRT PROJECT– PHASE 2
COLORADO/4TH STREET STATION
ADDED RAIN CANOPY PLANS
SHEET 1 OF 2

CONTRACT NO XP8902-002
DRAWING NO A-S7-128
REV 0
SCALE 1/4" = 1'-0"
SHEET NO

7-Jan-14 9:46 AM Jay Jacobsen

C:\projectwise\pb\projectwisenl\jacobsenjj\dms11025\expo2-A-S7-129.dwg

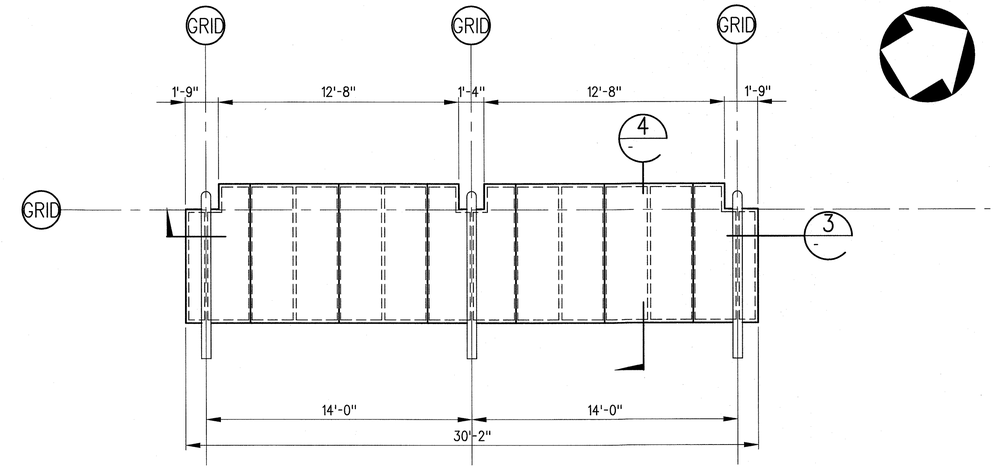

FARE BARRIER RAIN
CANOPY ROOF PLAN
1/4"=1'-0"
1
A-S7-129

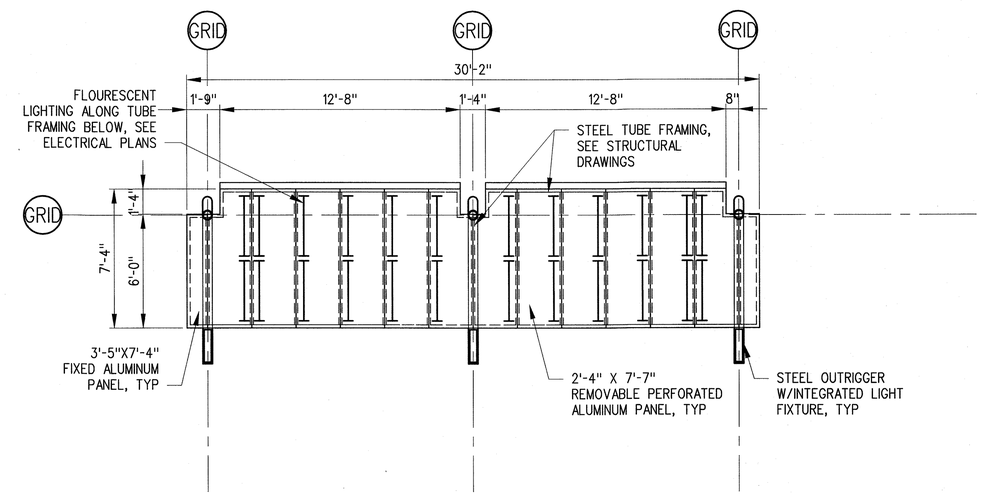

FARE BARRIER RAIN
CANOPY REFLECTED
CEILING PLAN
1/4"=1'-0"
2
A-S7-129

SRJV
MAR 03 2014
ISSUED FOR CONSTRUCTION

4' 2' 0 4' 8'

THE PREPARATION OF THIS DRAWING HAS BEEN FINANCED BY THE TAXES OF THE CITIZENS OF LOS ANGELES COUNTY AND OF THE STATE OF CALIFORNIA.

REV	DATE	BY	APP	REG NO	EXPIRES	SEAL HOLDER	DESCRIPTION
0	1/8/14	JJ	JT	C21914	8/31/15	JOHN TRAUTMANN	ECI 79

DESIGNED BY J. JACOBSEN
DRAWN BY M. KHANBABIAN
CHECKED BY C. SUERO
IN CHARGE J. TRAUTMANN
DATE 1/8/14

LICENSED ARCHITECT JOHN P. TRAUTMANN No. C21914 Exp. 08-31-15 ARCHITECTURAL STATE OF CALIFORNIA

Exposition Metro Line Construction Authority
Expo
Exposition Construction Authority Approved for Construction Drawings - AFC
FEB 28 2014

EXPO SKANSKA RADOS
444 South Flower Street
Suite 2200
Los Angeles, CA 90071
TEL (213) 443-7463
FAX (213) 362-9481

PARSONS BRINCKERHOFF

CURRENT STATUS

EXPOSITION LRT PROJECT- PHASE 2
COLORADO/4TH STREET STATION
ADDED RAIN CANOPY PLANS
SHEET 2 OF 2

CONTRACT NO XP8902-002
DRAWING NO A-S7-129
REV 0
SCALE 1/4" = 1'-0"
SHEET NO

Jacobsen, John J. 1:43 PM 15-Jan-14

ECI #00098 - PENDING

C:\Users\khanbabian\Desktop\sheet-pop\expo2-A-S7-130.dwg

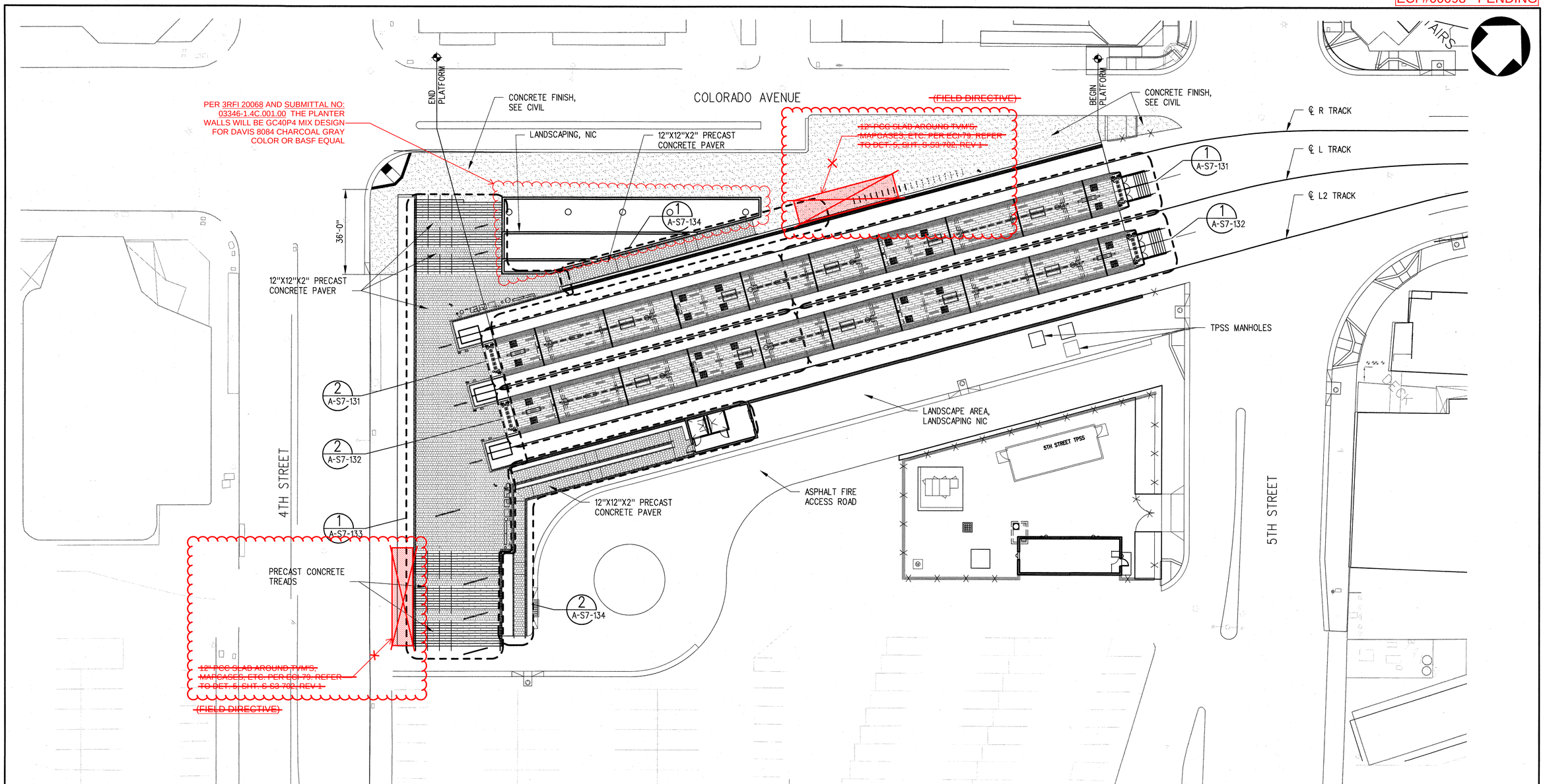

THE PREPARATION OF THIS DRAWING HAS BEEN FINANCED BY THE TAXES OF THE CITIZENS OF LOS ANGELES COUNTY AND OF THE STATE OF CALIFORNIA.

REV	DATE	BY	APP	REG NO	EXPIRES	SEAL HOLDER	DESCRIPTION
0	5/30/13	CS	JT	C21914	8/31/13	JOHN TRAUTMANN	APPROVED FOR CONSTRUCTION

DESIGNED BY J. JACOBSEN
DRAWN BY M. KHANBABIAN
CHECKED BY C. SUERO
IN CHARGE J. TRAUTMANN
DATE 5/30/13

LICENSED ARCHITECT JOHN P. TRAUTMANN No. C21914 Exp. 08-31-13 ARCHITECTURAL STATE OF CALIFORNIA

Exposition Metro Line Construction Authority
Expo
EXPO SKANSKA RADOS
444 South Flower Street
Suite 2200
Los Angeles, CA 90071
TEL (213) 443-7463
FAX (213) 362-9481

Exposition Construction Authority
Approved for Construction
Drawings - AFC
JUN 21 2013
PARSONS BRINCKERHOFF
CURRENT STATUS

EXPOSITION LRT PROJECT- PHASE 2
COLORADO/4TH STREET STATION
SITE PAVING PLAN

CONTRACT NO XP8902-002
DRAWING NO A-S7-130
REV 0
SCALE 1" = 20'-0"
SHEET NO

Khanbabian, Melineh 29-May-13 9:06 AM

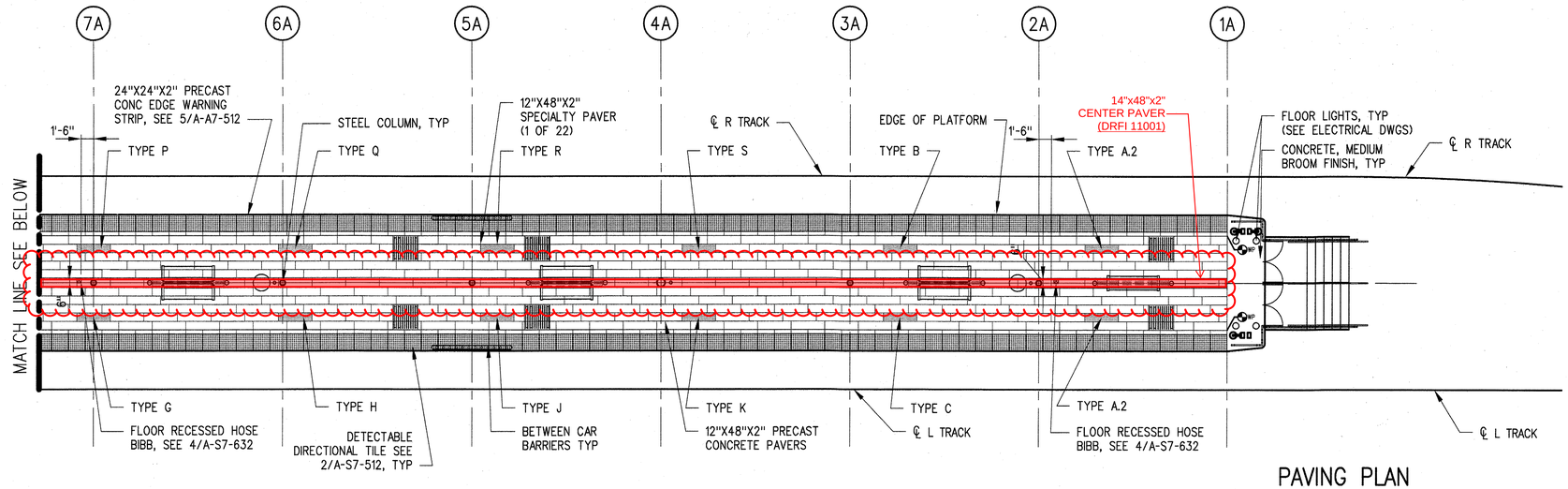

PAVING PLAN
PLATFORM A

1/8"=1'-0"

1 A-S7-131 A-S7-130

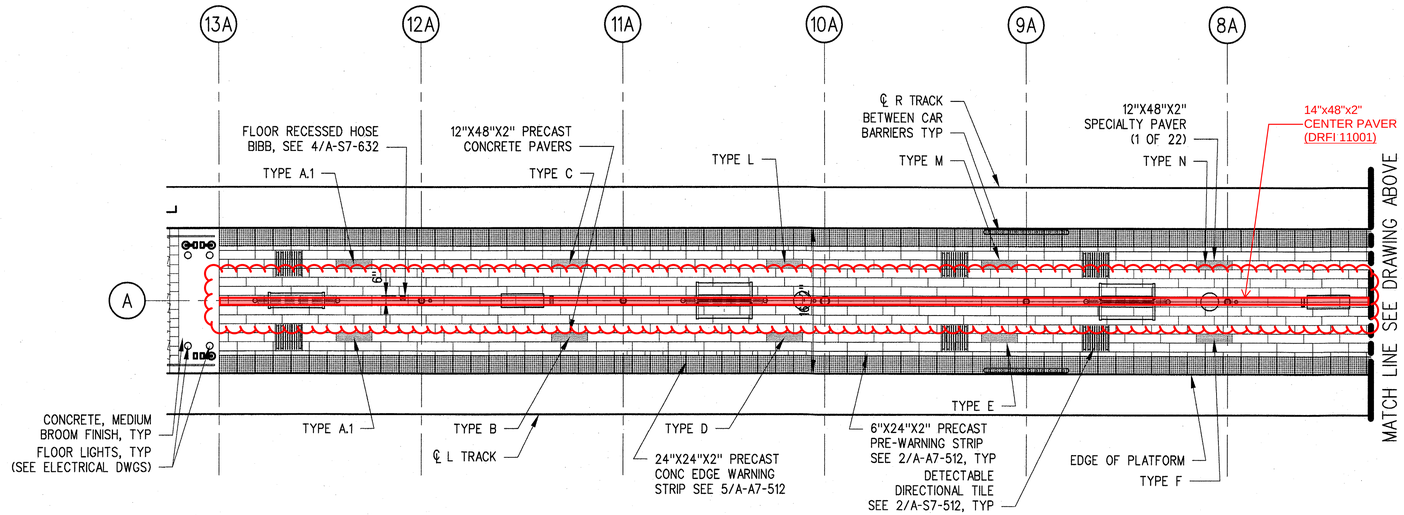

COEFFICIENT OF FRICTION:

*PUBLIC HORIZONTAL SURFACES	0.6 MIN PER ADAAG
*NON-PUBLIC HORIZONTAL SURFACES, EXTERIOR	0.56 MIN
*NON-PUBLIC HORIZONTAL SURFACES, INTERIOR	0.5
*PLATFORM EDGE STRIPS	TEXTURED VISUALLY-CONTRASTED MATERIAL CONFORMING TO ADAAG
SECTION 4.29	
*STAIRS, RAMPS, SLOPING SIDEWALKS	0.8 PER ADAAG
*AREA AROUND EQUIPMENT	0.6

8' 4' 0 8' 16'

PAVING PLAN
PLATFORM A (CONT)

1/8"=1'-0"

2 A-S7-131 A-S7-130

SRJV
JUN 24 2013
ISSUED FOR CONSTRUCTION

THE PREPARATION OF THIS DRAWING HAS BEEN FINANCED BY THE TAXES OF THE CITIZENS OF LOS ANGELES COUNTY AND OF THE STATE OF CALIFORNIA.

REV	DATE	BY	APP	REG NO	EXPIRES	SEAL HOLDER	DESCRIPTION
0	5/30/13	CS	JT	C21914	8/31/13	JOHN TRAUTMANN	APPROVED FOR CONSTRUCTION

DESIGNED BY J. JACOBSEN
DRAWN BY M. KHANBABIAN
CHECKED BY C. SUERO
IN CHARGE J. TRAUTMANN
DATE 5/30/13

LICENSED ARCHITECT JOHN P. TRAUTMANN No. C21914 Exp. 08-31-13 ARCHITECTURAL STATE OF CALIFORNIA

Exposition Metro Line Construction Authority
Expo
Exposition Construction Authority Approved for Construction Drawings - AFC
JUN 21 2013
EXPO SKANSKA RADOS
444 South Flower Street
Suite 2200
Los Angeles, CA 90071
TEL (213) 443-7463
FAX (213) 362-9481
PARSONS BRINCKERHOFF
CURRENT STATUS

EXPOSITION LRT PROJECT- PHASE 2
COLORADO/4TH STREET STATION
PAVING PLAN
PLATFORM A

CONTRACT NO XP8902-002
DRAWING NO A-S7-131
REV 0
SCALE 1/8" = 1'-0"
SHEET NO

C:\Users\khanbabian\Desktop\sheet-pop\expo2-A-S7-131.dwg
29-May-13 9:06 AM Khanbabian, Melineh

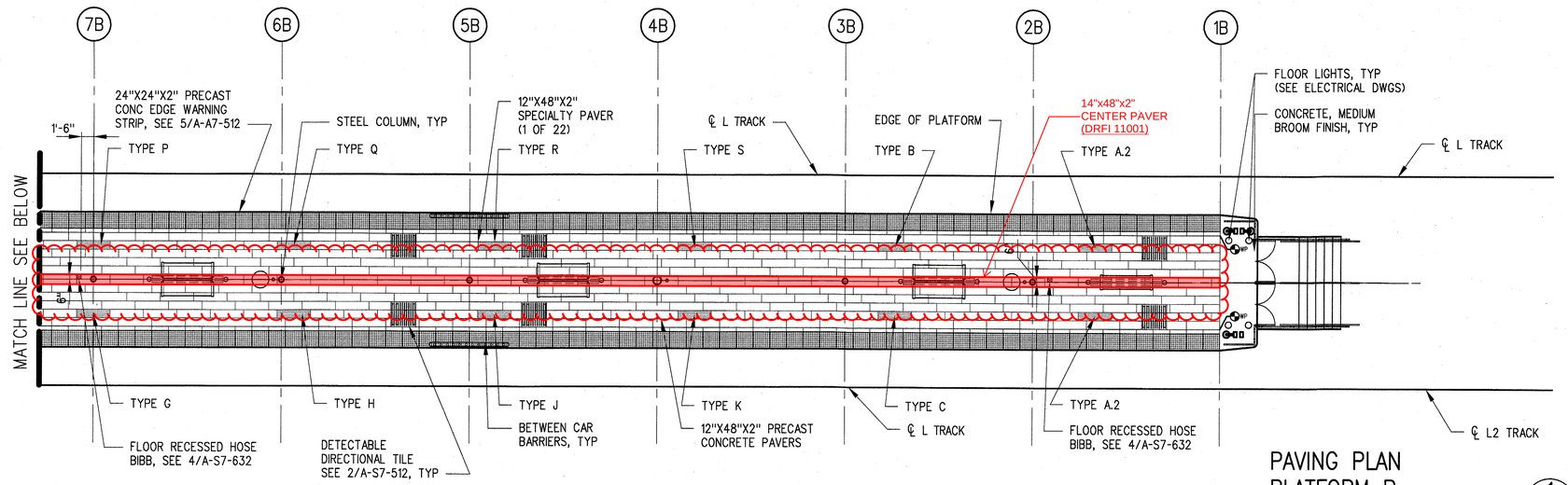

PAVING PLAN PLATFORM B

1/8"=1'-0"

1 A-S7-132 A-S7-130

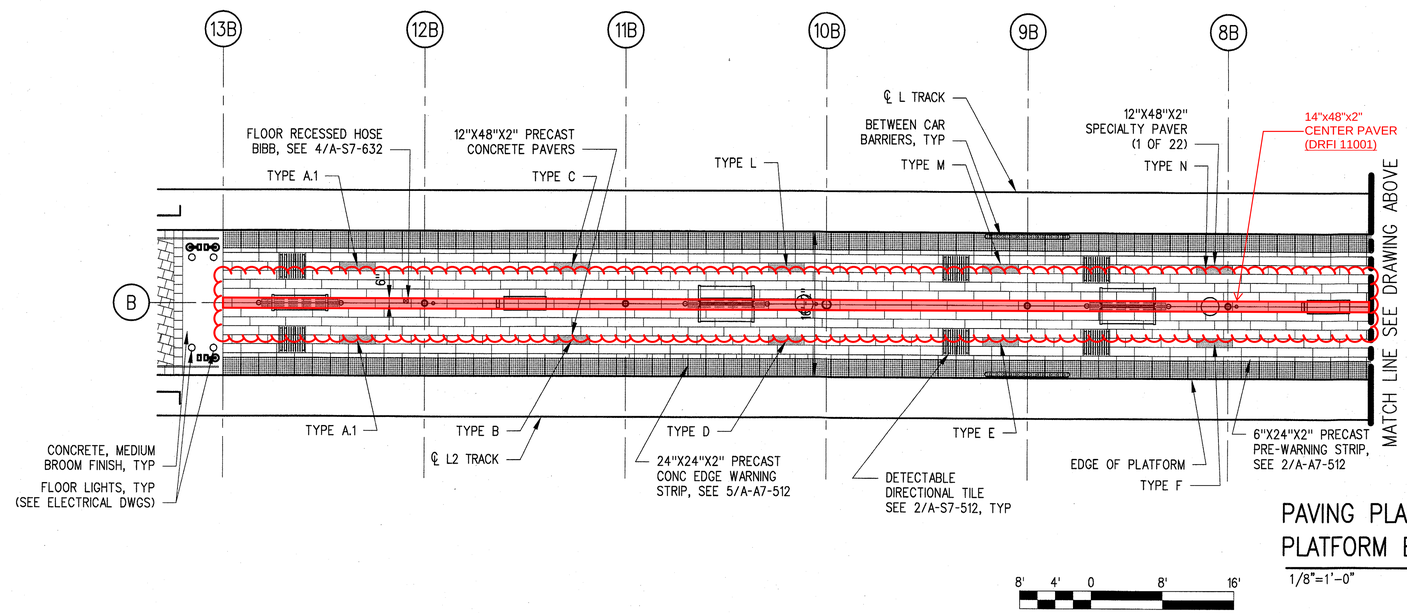

PAVING PLAN PLATFORM B (CONT)

1/8"=1'-0"

2 A-S7-132 A-S7-130

SRJV
JUN 24 2013
ISSUED FOR CONSTRUCTION

THE PREPARATION OF THIS DRAWING HAS BEEN FINANCED BY THE TAXES OF THE CITIZENS OF LOS ANGELES COUNTY AND OF THE STATE OF CALIFORNIA.

REV	DATE	BY	APP	REG NO	EXPIRES	SEAL HOLDER	DESCRIPTION
0	5/30/13	CS	JT	C21914	8/31/13	JOHN TRAUTMANN	APPROVED FOR CONSTRUCTION

DESIGNED BY J. JACOBSEN
DRAWN BY M. KHANBABIAN
CHECKED BY C. SUERO
IN CHARGE J. TRAUTMANN
DATE 5/30/13

LICENSED ARCHITECT JOHN P. TRAUTMANN No. C21914 Exp. 08-31-13 ARCHITECTURAL STATE OF CALIFORNIA

Exposition Metro Line Construction Authority
Expo

Exposition Construction Authority
Approved for Construction
Drawings - AFC

EXPO SKANSKA RADOS

444 South Flower Street
Suite 2200
Los Angeles, CA 90071
TEL (213) 443-7463
FAX (213) 362-9481

PARSONS BRINCKERHOFF
JUN 21 2013
CURRENT STATUS

EXPOSITION LRT PROJECT- PHASE 2
COLORADO/4TH STREET STATION
PAVING PLAN
PLATFORM B

CONTRACT NO XP8902-002
DRAWING NO A-S7-132
REV 0
SCALE 1/8" = 1'-0"
SHEET NO

C:\Users\khanbabianm\Desktop\sheet-pop\expo2-A-S7-132.dwg
29-May-13 9:06 AM Khanbabian, Melineh

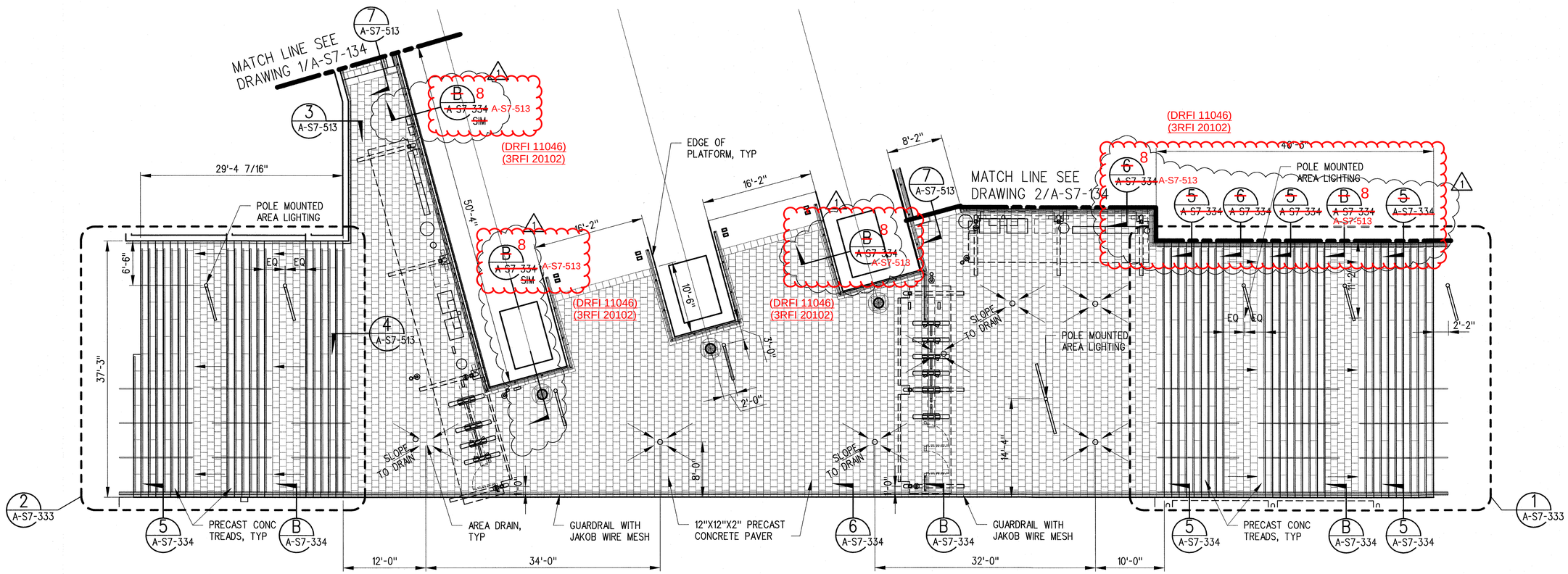

NOTE: SEE CIVIL FOR TREADS, LANDINGS AND PLAZA SLOPES

UPPER PLAZA
1/8"=1'-0"
1 A-S7-133 A-S7-130

SRJV
MAR 03 2014
ISSUED FOR CONSTRUCTION

8' 4' 0 8' 16'

THE PREPARATION OF THIS DRAWING HAS BEEN FINANCED BY THE TAXES OF THE CITIZENS OF LOS ANGELES COUNTY AND OF THE STATE OF CALIFORNIA.

REV	DATE	BY	APP	REG NO	EXPIRES	SEAL HOLDER	DESCRIPTION
1	1/8/14	JJ	JT	C21914	8/31/15	JOHN TRAUTMANN	ECI 79
0	5/30/13	CS	JT	C21914	8/31/13	JOHN TRAUTMANN	APPROVED FOR CONSTRUCTION

DESIGNED BY J. JACOBSEN
DRAWN BY M. KHANBABIAN
CHECKED BY 21914
IN CHARGE J. TRAUTMANN
DATE 5/30/13

LICENSED ARCHITECT JOHN P. TRAUTMANN No. C21914 Exp. 08-31-15 ARCHITECTURAL STATE OF CALIFORNIA

Exposition Metro Line Construction Authority
Expo
Exposition Construction Authority Approved for Construction Drawings - AFC
FEB 28 2014

EXPO SKANSKA RADOS
444 South Flower Street
Suite 2200
Los Angeles, CA 90071
TEL (213) 443-7463
FAX (213) 362-9481

PARSONS BRINCKERHOFF

CURRENT STATUS

EXPOSITION LRT PROJECT- PHASE 2
COLORADO/4TH STREET STATION
PAVING PLAN
UPPER PLAZA

CONTRACT NO XP8902-002
DRAWING NO A-S7-133
REV 1
SCALE 1/8" = 1'-0"
SHEET NO

C:\Users\jacobsenjj\Documents\Expo2\PDF\ECI79\expo2-A-S7-133.dwg
11-Feb-14 2:45 PM Jacobsen, John J.

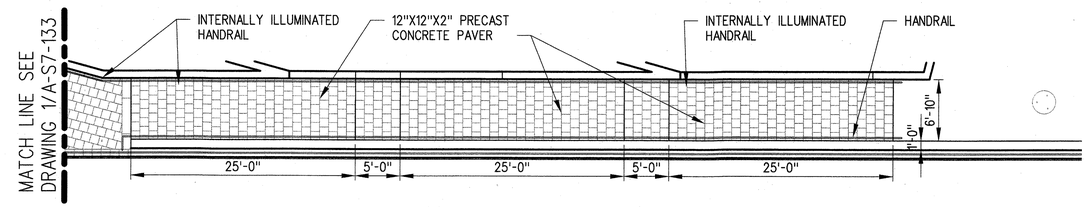

NOTE:
SEE A-S7-331 FOR ACCESSIBLE RAMP #1 PLAN AND SECTION

ACCESSIBLE RAMP#1 PAVING PLAN

1/8"=1'-0"

1 A-S7-134 A-S7-130

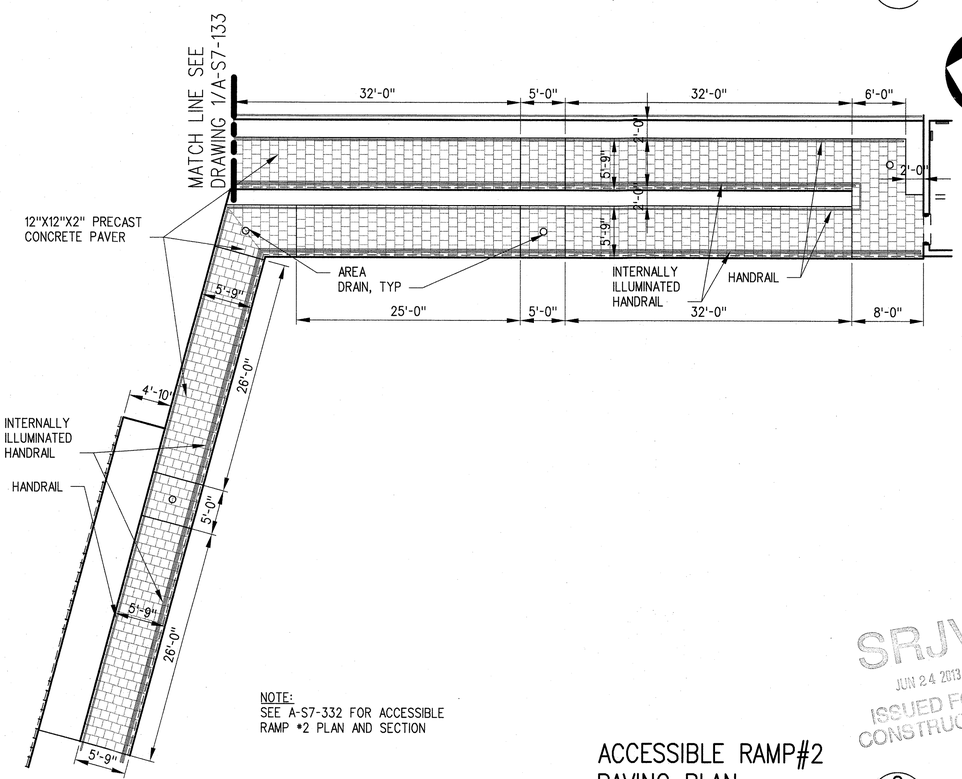

NOTE:
SEE A-S7-332 FOR ACCESSIBLE RAMP #2 PLAN AND SECTION

SRJV
JUN 24 2013
ISSUED FOR CONSTRUCTION

ACCESSIBLE RAMP#2 PAVING PLAN

1/8"=1'-0"

2 A-S7-134 A-S7-130

THE PREPARATION OF THIS DRAWING HAS BEEN FINANCED BY THE TAXES OF THE CITIZENS OF LOS ANGELES COUNTY AND OF THE STATE OF CALIFORNIA.

REV	DATE	BY	APP	REG NO	EXPIRES	SEAL HOLDER	DESCRIPTION
0	5/30/13	CS	JT	C21914	8/31/13	JOHN TRAUTMANN	APPROVED FOR CONSTRUCTION

DESIGNED BY J. JACOBSEN
DRAWN BY M. KHANBABIAN
CHECKED BY C. SUERO
IN CHARGE J. TRAUTMANN
DATE 5/30/13

LICENSED ARCHITECT JOHN P. TRAUTMANN No. C21914 Exp. 08-31-13 ARCHITECTURAL STATE OF CALIFORNIA

Exposition Metro Line Construction Authority
Expo

Exposition Construction Authority Approved for Construction Drawings - AFC

EXPO SKANSKA RADOS

444 South Flower Street
Suite 2200
Los Angeles, CA 90071
TEL (213) 443-7463
FAX (213) 362-9481

PARSONS BRINCKERHOFF

JUN 21 2013

CURRENT STATUS

EXPOSITION LRT PROJECT- PHASE 2
COLORADO/4TH STREET STATION
PAVING PLAN
ACCESSIBLE RAMPS

CONTRACT NO XP8902-002
DRAWING NO A-S7-134
REV 0
SCALE 1/8" = 1'-0"
SHEET NO

C:\Users\khanbabianm\Desktop\sheet-pop\expo2-A-S7-134.dwg
29-May-13 9:06 AM Khanbabian, Melineh

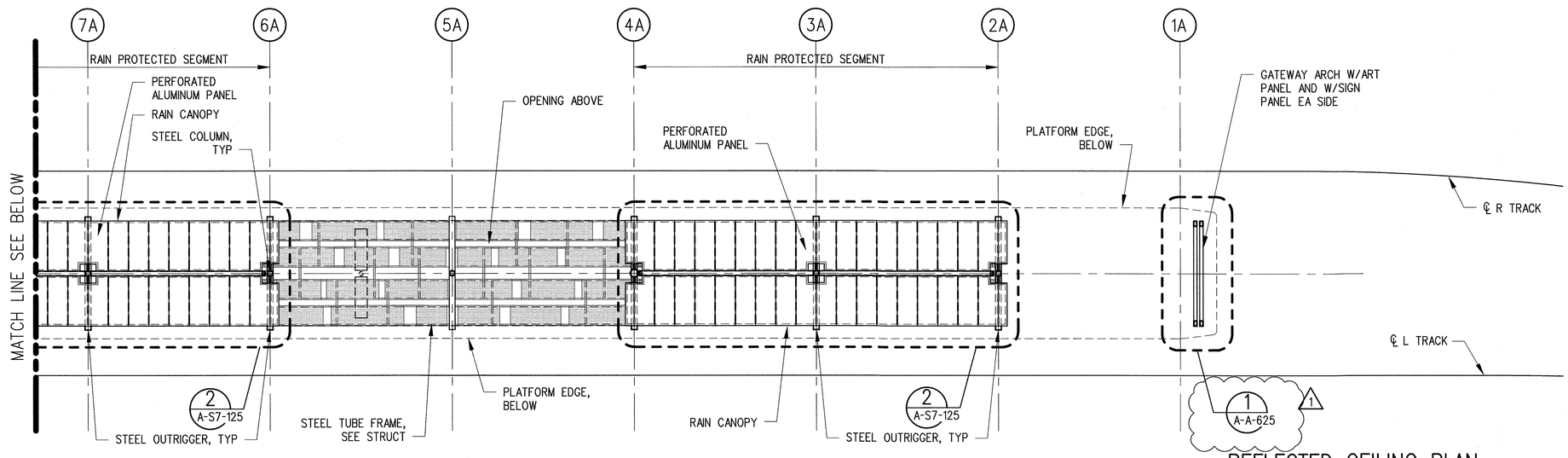

REFLECTED CEILING PLAN
PLATFORM A

1/8"=1'-0"

1 A-S7-141

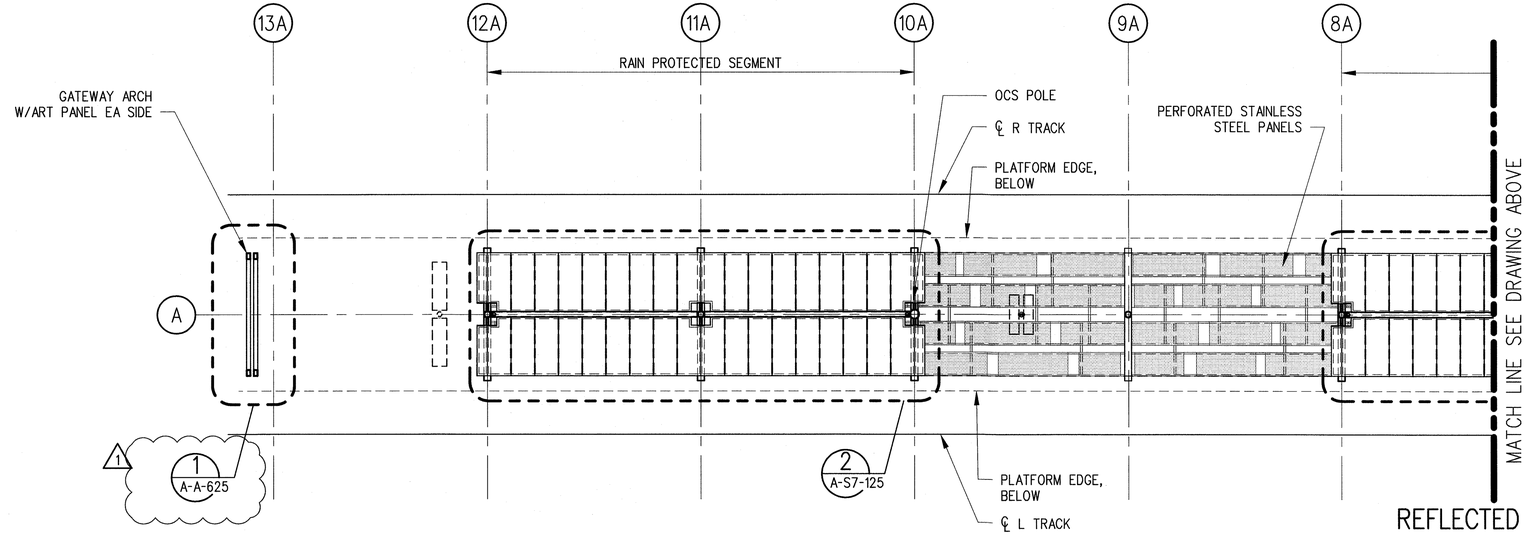

REFLECTED CEILING PLAN
PLATFORM A (CONT)

1/8"=1'-0"

2 A-S7-141

SRJV
MAR 03 2014
ISSUED FOR CONSTRUCTION

8' 4' 0 8' 16'

THE PREPARATION OF THIS DRAWING HAS BEEN FINANCED BY THE TAXES OF THE CITIZENS OF LOS ANGELES COUNTY AND OF THE STATE OF CALIFORNIA.

REV	DATE	BY	APP	REG NO	EXPIRES	SEAL HOLDER	DESCRIPTION
1	1/8/14	JJ	JT	C21914	8/31/15	JOHN TRAUTMANN	ECI 79
0	5/30/13	CS	JT	C21914	8/31/13	JOHN TRAUTMANN	APPROVED FOR CONSTRUCTION

DESIGNED BY J. JACOBSEN
DRAWN BY M. KHANBABIAN
CHECKED BY C. SUERO
IN CHARGE J. TRAUTMANN
DATE 5/30/13

LICENSED ARCHITECT JOHN P. TRAUTMANN No. C21914 Exp. 08-31-15 ARCHITECTURAL STATE OF CALIFORNIA

Exposition Metro Line Construction Authority
Expo
Exposition Construction Authority Approved for Construction Drawings - AFC
FEB 28 2014

EXPO SKANSKA RADOS

444 South Flower Street
Suite 2200
Los Angeles, CA 90071
TEL (213) 443-7463
FAX (213) 362-9481

PARSONS BRINCKERHOFF

CURRENT STATUS

EXPOSITION LRT PROJECT- PHASE 2
COLORADO/4TH STREET STATION
REFLECTED CEILING PLAN
PLATFORM A

CONTRACT NO XP8902-002
DRAWING NO A-S7-141
REV 1
SCALE 1/8" = 1'-0"
SHEET NO

C:\Users\jacobsenjj\Documents\Expo2\PDF\ECI79\expo2-A-S7-141.dwg
11-Feb-14 2:22 PM
Jacobsen, John J.

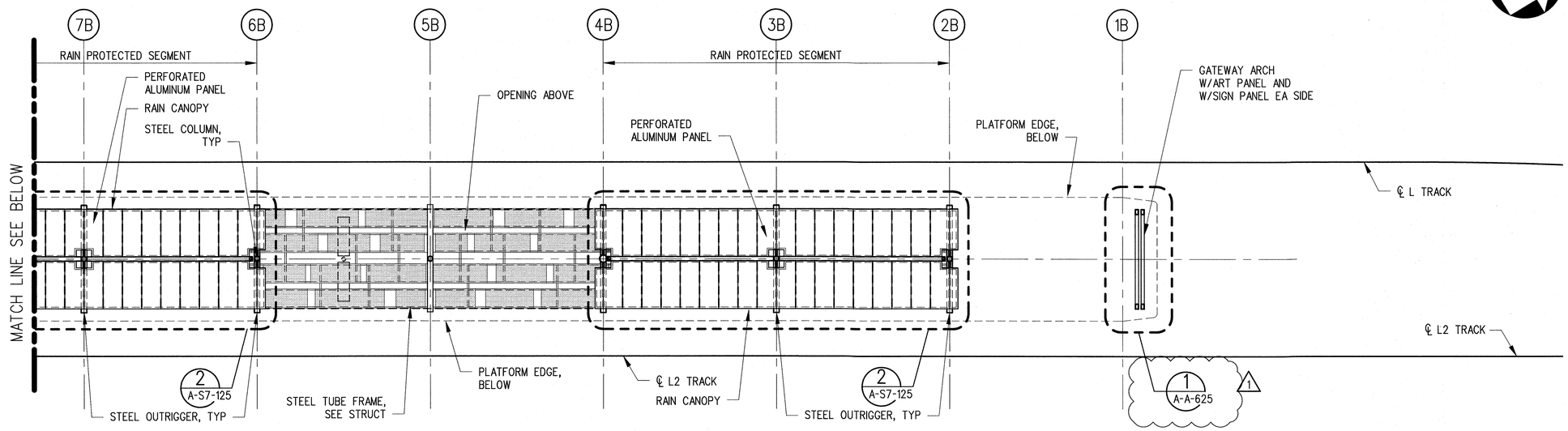

REFLECTED CEILING PLAN
PLATFORM B
1/8"=1'-0"
1 A-S7-142

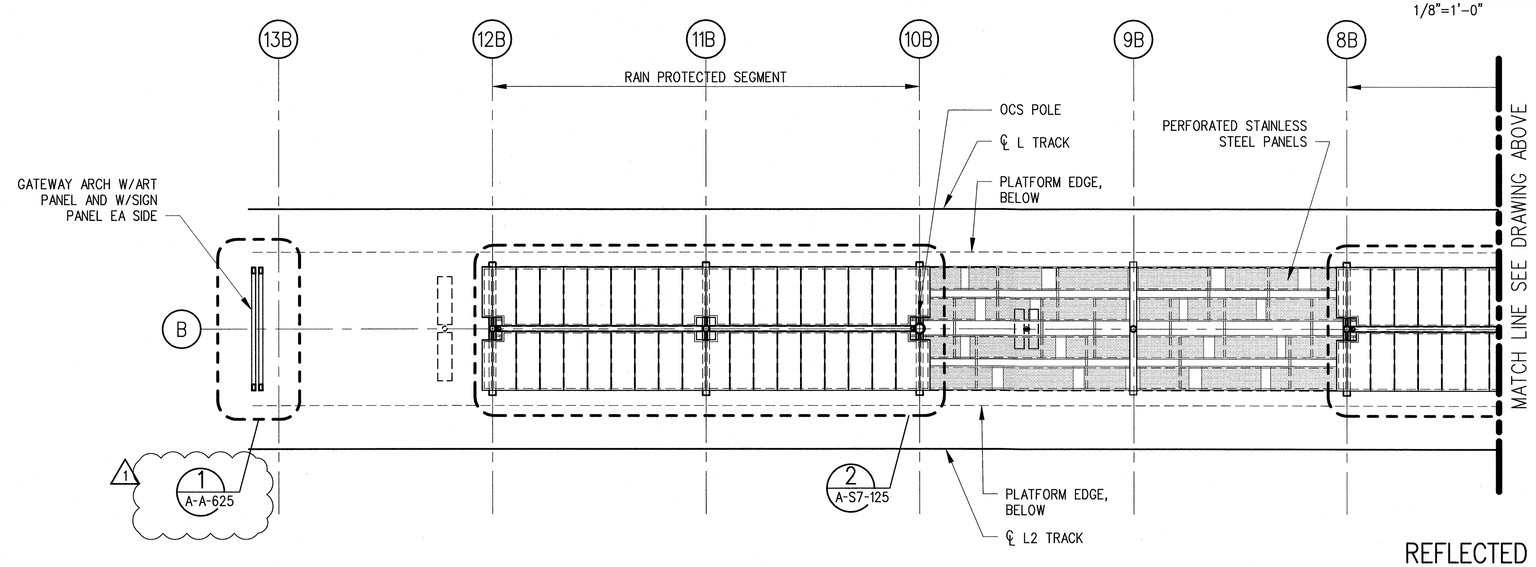

REFLECTED CEILING PLAN
PLATFORM B (CONT)
1/8"=1'-0"
2 A-S7-142

SRJV
MAR 03 2014
ISSUED FOR CONSTRUCTION

8' 4' 0 8' 16'

THE PREPARATION OF THIS DRAWING HAS BEEN FINANCED BY THE TAXES OF THE CITIZENS OF LOS ANGELES COUNTY AND OF THE STATE OF CALIFORNIA.

REV	DATE	BY	APP	REG NO	EXPIRES	SEAL HOLDER	DESCRIPTION
1	1/8/14	JJ	JT	C21914	8/31/15	JOHN TRAUTMANN	ECI 79
0	5/30/13	CS	JT	C21914	8/31/13	JOHN TRAUTMANN	APPROVED FOR CONSTRUCTION

DESIGNED BY J. JACOBSEN
DRAWN BY M. KHANBABIAN
CHECKED BY C. SUERO
IN CHARGE J. TRAUTMANN
DATE 5/30/13

LICENSED ARCHITECT JOHN P. TRAUTMANN No. C21914 Exp. 08-31-15 ARCHITECTURAL STATE OF CALIFORNIA

Exposition Metro Line Construction Authority
Expo
Exposition Construction Authority Approved for Construction Drawings - AFC
FEB 28 2014

EXPO SKANSKA RADOS

444 South Flower Street
Suite 2200
Los Angeles, CA 90071
TEL (213) 443-7463
FAX (213) 362-9481

PARSONS BRINCKERHOFF

CURRENT STATUS

EXPOSITION LRT PROJECT- PHASE 2
COLORADO/4TH STREET STATION
REFLECTED CEILING PLAN
PLATFORM B

CONTRACT NO XP8902-002
DRAWING NO A-S7-142
REV 1
SCALE 1/8" = 1'-0"
SHEET NO

C:\Users\jacobsenjj\Documents\Expo2\PDF\ECI79\expo2-A-S7-142.dwg
11-Feb-14 2:23 PM Jacobsen, John J.

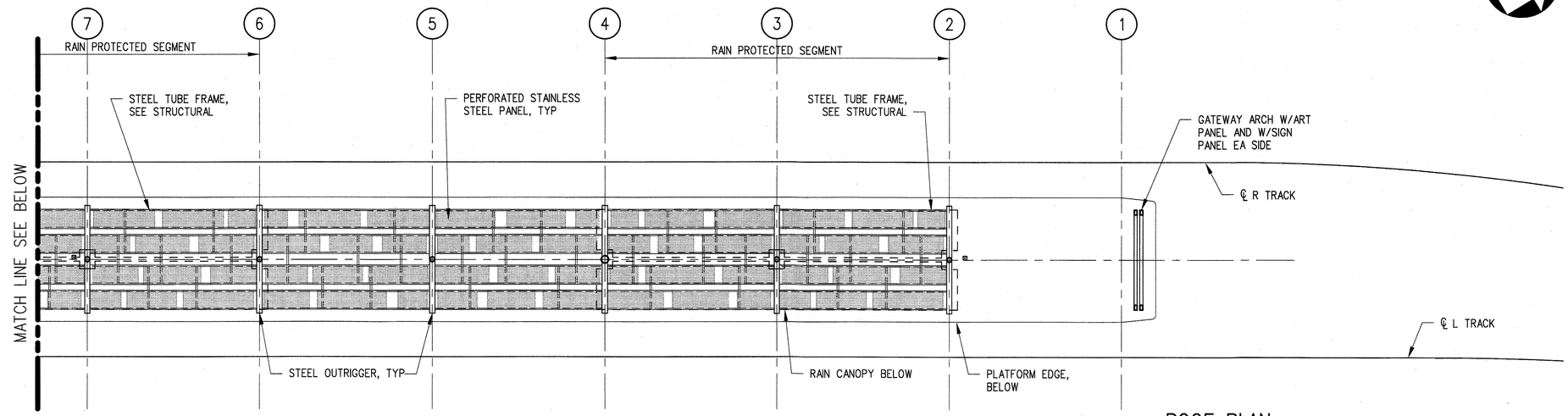

ROOF PLAN
PLATFORM A

1/8"=1'-0"

1 / A-S7-151

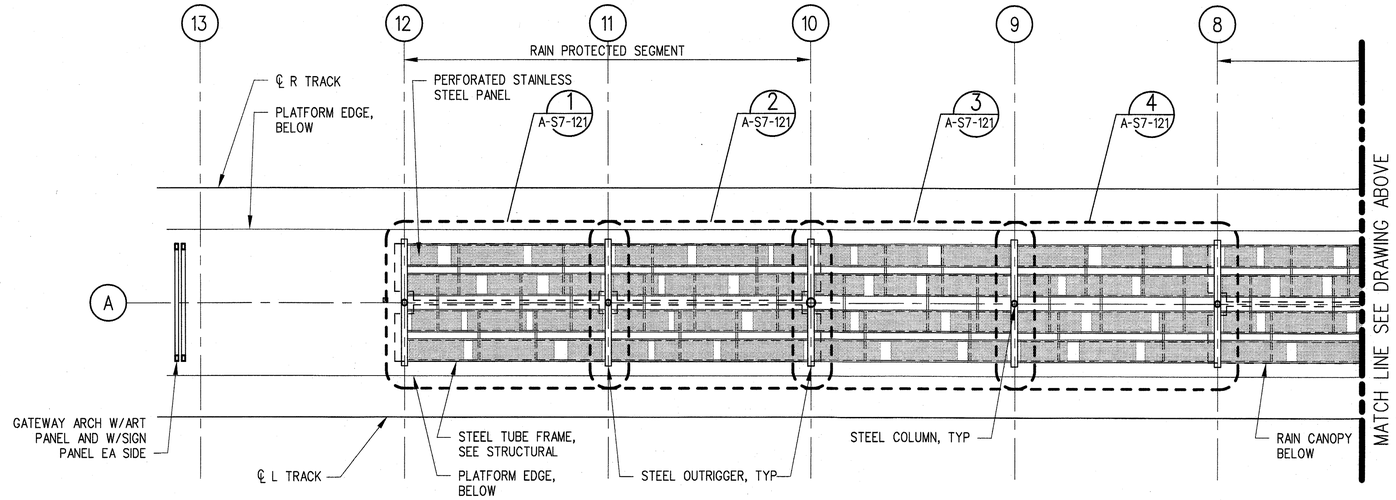

ROOF PLAN
PLATFORM A (CONT)

1/8"=1'-0"

2 / A-S7-151

SRJV
JUN 24 2013
ISSUED FOR CONSTRUCTION

8' 4' 0 8' 16'

THE PREPARATION OF THIS DRAWING HAS BEEN FINANCED BY THE TAXES OF THE CITIZENS OF LOS ANGELES COUNTY AND OF THE STATE OF CALIFORNIA.

REV	DATE	BY	APP	REG NO	EXPIRES	SEAL HOLDER	DESCRIPTION
0	5/30/13	CS	JT	C21914	8/31/13	JOHN TRAUTMANN	APPROVED FOR CONSTRUCTION

DESIGNED BY J. JACOBSEN
DRAWN BY M. KHANBABIAN
CHECKED BY C. SUERO
IN CHARGE J. TRAUTMANN
DATE 5/30/13

LICENSED ARCHITECT JOHN P. TRAUTMANN No. C21914 Exp. 08-31-13 ARCHITECTURAL STATE OF CALIFORNIA

Exposition Metro Line Construction Authority
Expo
Exposition Construction Authority Approved for Construction Drawings - AFC
JUN 21 2013
PARSONS BRINCKERHOFF
CURRENT STATUS

EXPO SKANSKA RADOS
444 South Flower Street
Suite 2200
Los Angeles, CA 90071
TEL (213) 443-7463
FAX (213) 362-9481

EXPOSITION LRT PROJECT- PHASE 2
COLORADO/4TH STREET STATION
ROOF PLAN
PLATFORM A

CONTRACT NO XP8902-002
DRAWING NO A-S7-151
REV 0
SCALE 1/8" = 1'-0"
SHEET NO

C:\Users\khanbabian\Desktop\sheet-poplexpo2-A-S7-151.dwg
29-May-13 9:07 AM Khanbabian, Melineh

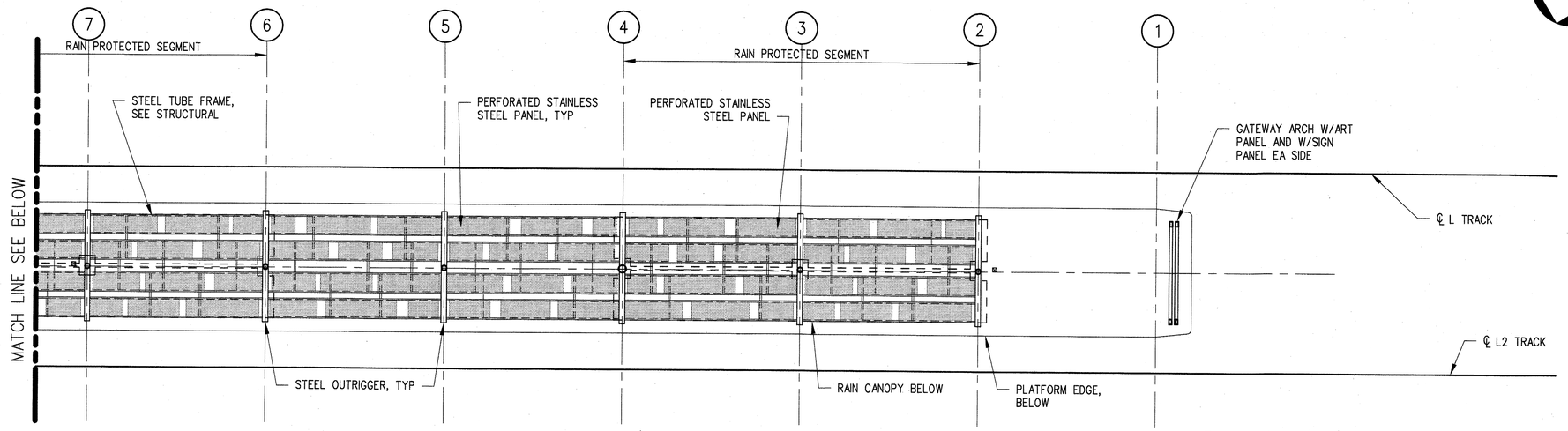

ROOF PLAN
PLATFORM B

1/8"=1'-0"

1 A-S7-152

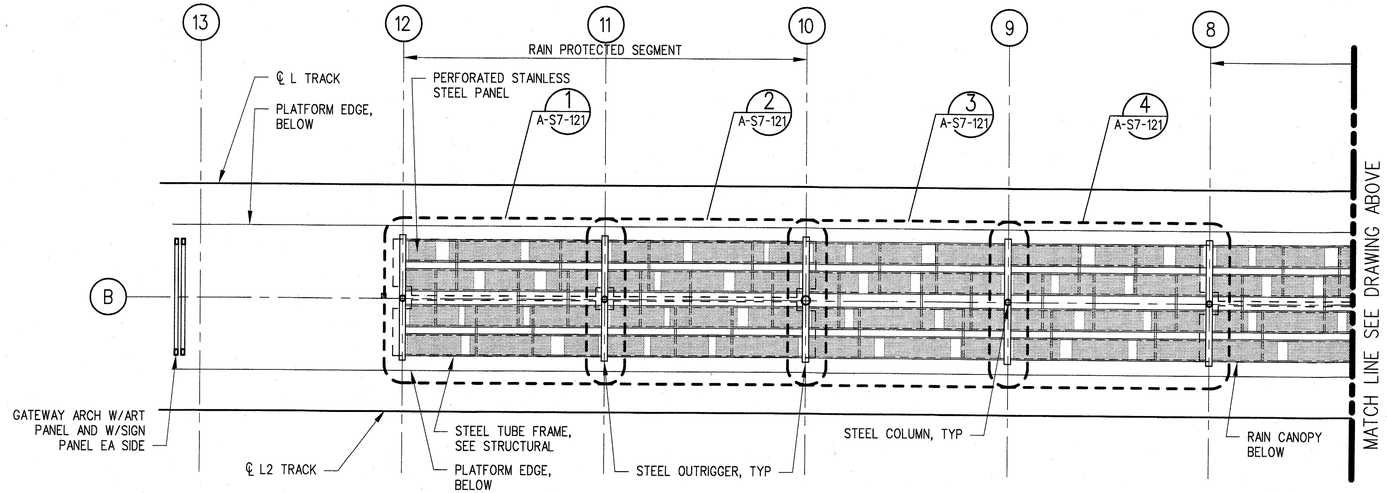

SRJV
JUN 24 2013
ISSUED FOR CONSTRUCTION

ROOF PLAN
PLATFORM B (CONT)

1/8"=1'-0"

2 A-S7-152

8' 4' 0 8' 16'

THE PREPARATION OF THIS DRAWING HAS BEEN FINANCED BY THE TAXES OF THE CITIZENS OF LOS ANGELES COUNTY AND OF THE STATE OF CALIFORNIA.

REV	DATE	BY	APP	REG NO	EXPIRES	SEAL HOLDER	DESCRIPTION
0	5/30/13	CS	JT	C21914	8/31/13	JOHN TRAUTMANN	APPROVED FOR CONSTRUCTION

DESIGNED BY J. JACOBSEN
DRAWN BY M. KHANBABIAN
CHECKED BY C. SUERO
IN CHARGE J. TRAUTMANN
DATE 5/30/13

LICENSED ARCHITECT JOHN P. TRAUTMANN No. C21914 Exp. 08-31-13 ARCHITECTURAL STATE OF CALIFORNIA

Exposition Metro Line Construction Authority
Expo
Exposition Construction Authority Approved for Construction Drawings - AFC
JUN 21 2013
PARSONS BRINCKERHOFF
CURRENT STATUS

EXPO SKANSKA RADOS
444 South Flower Street
Suite 2200
Los Angeles, CA 90071
TEL (213) 443-7463
FAX (213) 362-9481

EXPOSITION LRT PROJECT- PHASE 2
COLORADO/4TH STREET STATION
ROOF PLAN
PLATFORM B

CONTRACT NO XP8902-002
DRAWING NO A-S7-152
REV 0
SCALE 1/8" = 1'-0"
SHEET NO

C:\Users\khanbabiamm\Desktop\sheet-pop\expo2-A-S7-152.dwg
23-May-13 9:07 AM Khanbabian, Melineh

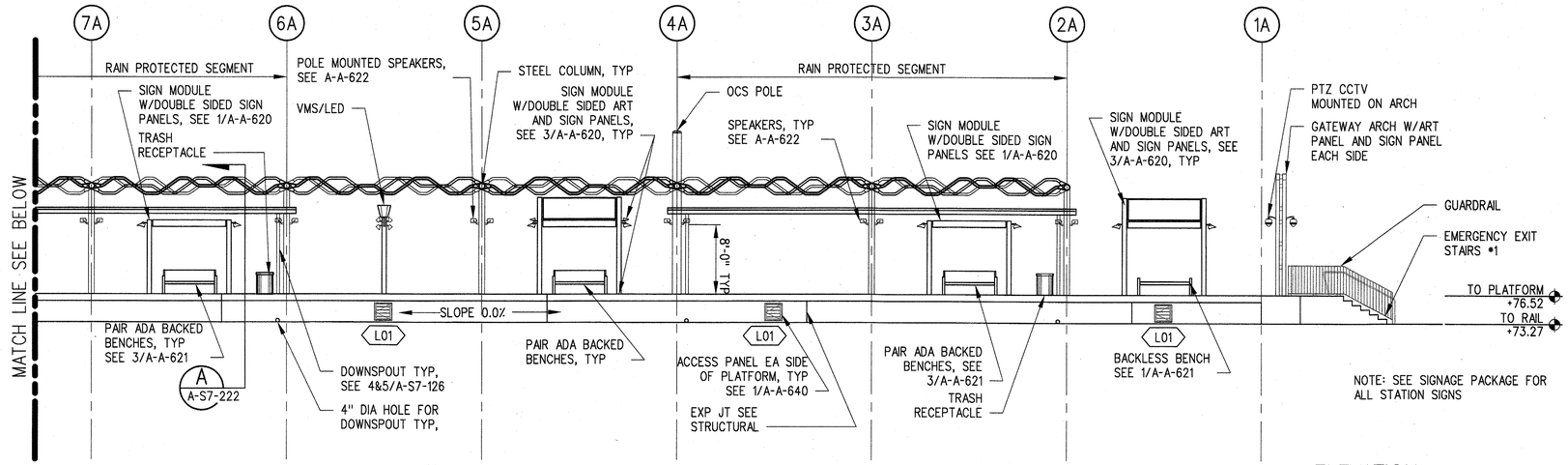

ELEVATION PLATFORM A

1/8"=1'-0"

A A-S7-201 A-S7-111

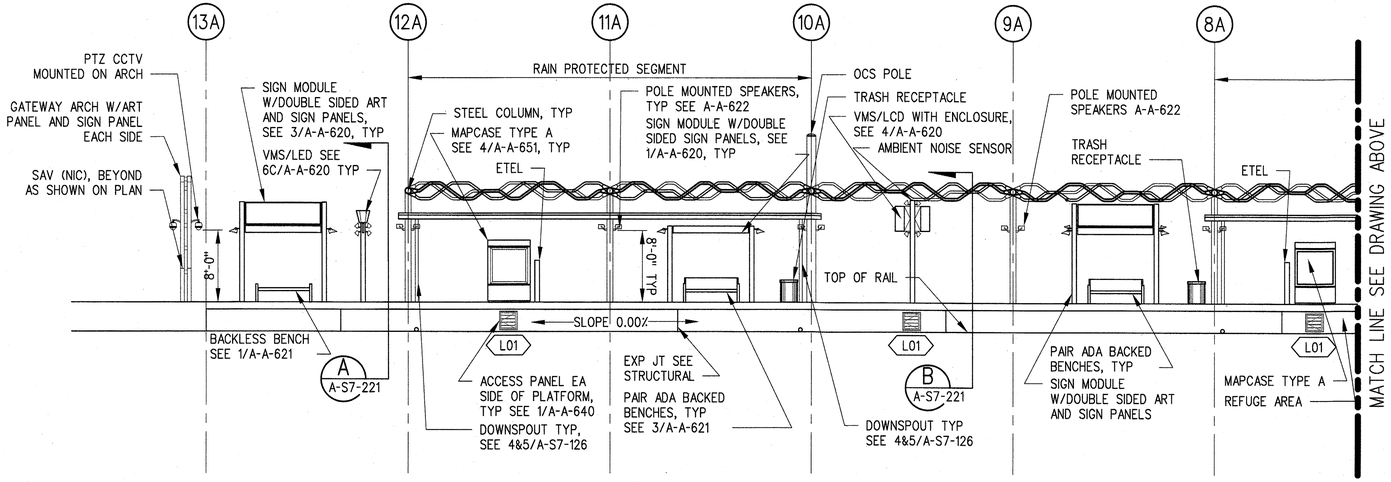

ELEVATION PLATFORM A (CONT)

1/8"=1'-0"

B A-S7-201 A-S7-111

SRJV
JUN 24 2013
ISSUED FOR CONSTRUCTION

8' 4' 0 8' 16'

THE PREPARATION OF THIS DRAWING HAS BEEN FINANCED BY THE TAXES OF THE CITIZENS OF LOS ANGELES COUNTY AND OF THE STATE OF CALIFORNIA.

REV	DATE	BY	APP	REG NO	EXPIRES	SEAL HOLDER	DESCRIPTION
0	5/30/13	CS	JT	C21914	8/31/13	JOHN TRAUTMANN	APPROVED FOR CONSTRUCTION

DESIGNED BY J. JACOBSEN
DRAWN BY M. KHANBABIAN
CHECKED BY C. SUERO
IN CHARGE J. TRAUTMANN
DATE 5/30/13

LICENSED ARCHITECT JOHN P. TRAUTMANN No. C21914 Exp. 08-31-13 ARCHITECTURAL STATE OF CALIFORNIA

Exposition Metro Line Construction Authority
Expo
Exposition Construction Authority Approved for Construction Drawings - AFC
JUN 21 2013
PARSONS BRINCKERHOFF
CURRENT STATUS

EXPO SKANSKA RADOS
444 South Flower Street
Suite 2200
Los Angeles, CA 90071
TEL (213) 443-7463
FAX (213) 362-9481

EXPOSITION LRT PROJECT- PHASE 2
COLORADO/4TH STREET STATION
ELEVATION
PLATFORM A

CONTRACT NO XP8902-002
DRAWING NO A-S7-201
REV 0
SCALE 1/8" = 1'-0"
SHEET NO

C:\Users\khanbabiamm\Desktop\sheet-pop\expo2-A-S7-201.dwg
29-May-13 9:07 AM Khanbabian, Melineh

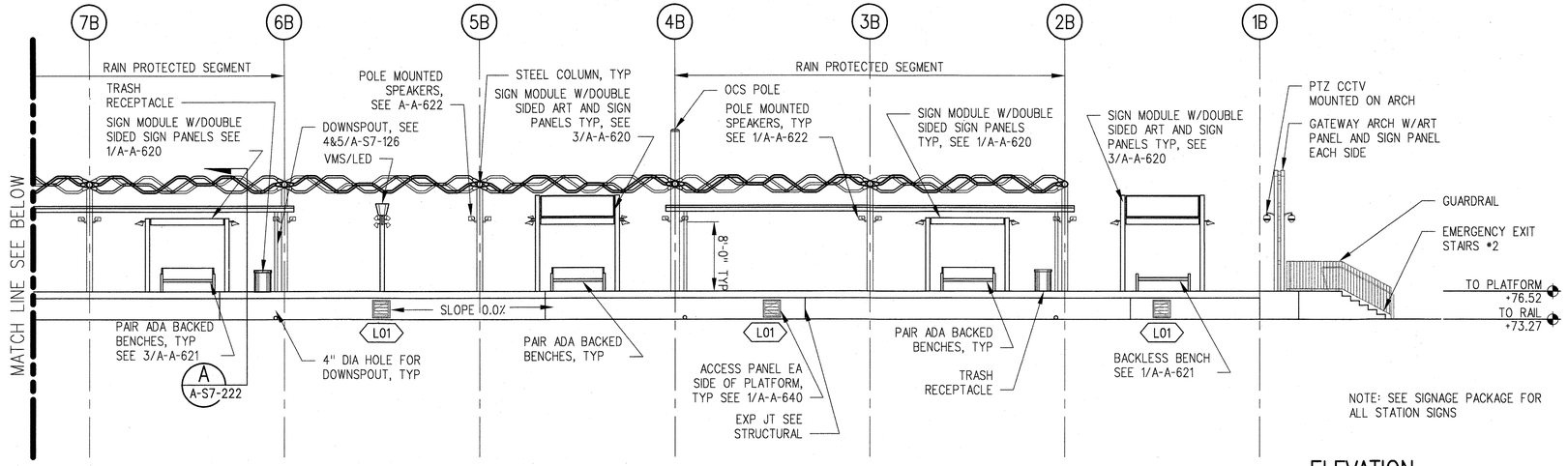

ELEVATION PLATFORM B

1/8"=1'-0"

A A-S7-202 A-S7-112

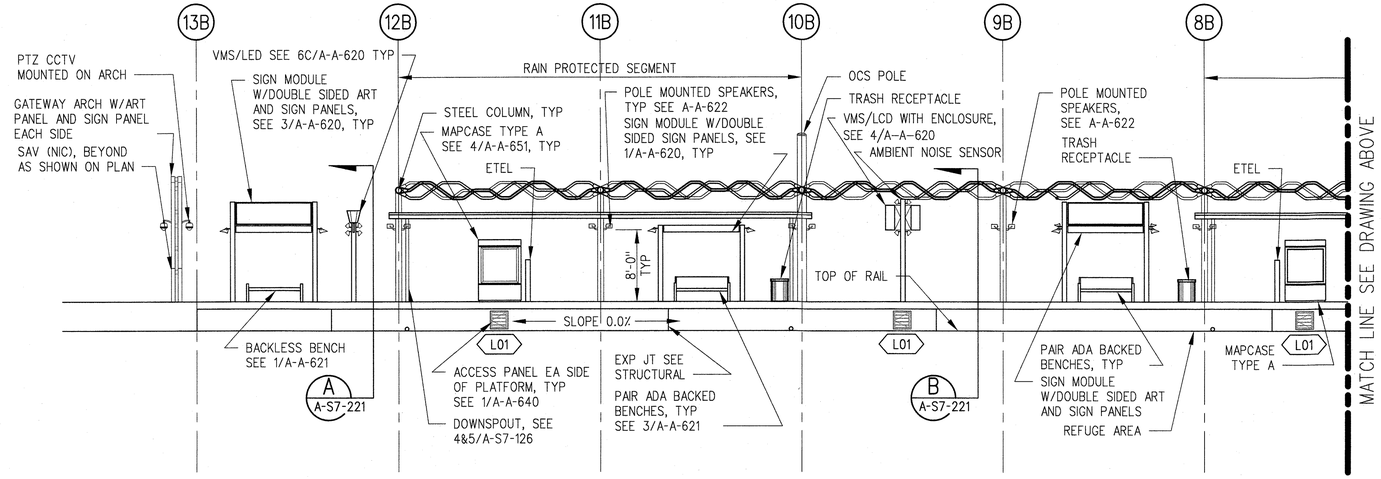

ELEVATION PLATFORM B (CONT)

1/8"=1'-0"

B A-S7-202 A-S7-112

SRJV JUN 24 2013 ISSUED FOR CONSTRUCTION

8' 4' 0 8' 16'

THE PREPARATION OF THIS DRAWING HAS BEEN FINANCED BY THE TAXES OF THE CITIZENS OF LOS ANGELES COUNTY AND OF THE STATE OF CALIFORNIA.

REV	DATE	BY	APP	REG NO	EXPIRES	SEAL HOLDER	DESCRIPTION
0	5/30/13	CS	JT	C21914	8/31/13	JOHN TRAUTMANN	APPROVED FOR CONSTRUCTION

DESIGNED BY J. JACOBSEN
DRAWN BY M. KHANBABIAN
CHECKED BY C. SUERO
IN CHARGE J. TRAUTMANN
DATE 5/30/13

LICENSED ARCHITECT JOHN P. TRAUTMANN No. C21914 Exp. 08-31-13 ARCHITECTURAL STATE OF CALIFORNIA

Exposition Metro Line Construction Authority
Expo
Exposition Construction Authority Approved for Construction Drawings - AFC
JUN 21 2013

EXPO SKANSKA RADOS
444 South Flower Street
Suite 2200
Los Angeles, CA 90071
TEL (213) 443-7463
FAX (213) 362-9481

PARSONS BRINCKERHOFF
CURRENT STATUS

EXPOSITION LRT PROJECT- PHASE 2
COLORADO/4TH STREET STATION
ELEVATION
PLATFORM B

CONTRACT NO XP8902-002
DRAWING NO A-S7-202
REV 0
SCALE 1/8" = 1'-0"
SHEET NO

C:\Users\khanbabiam\Desktop\sheet-pop\expo2-A-S7-202.dwg
29-May-13 9:07 AM Khanbabian, Meliineh

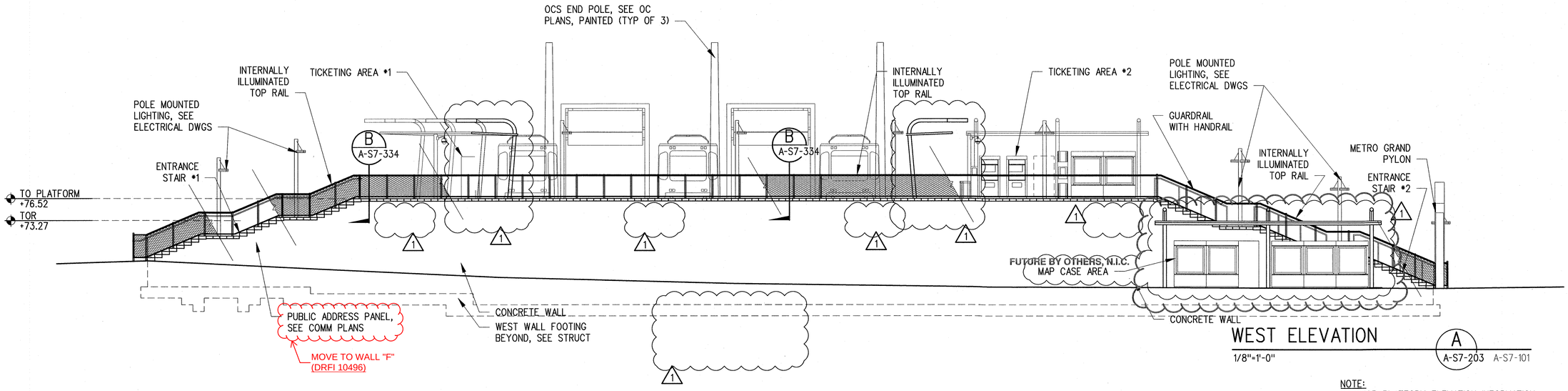

WEST ELEVATION

1/8"=1'-0"

A A-S7-203 A-S7-101

NOTE:
1. FOR PLATFORM ELEVATION INFORMATION SEE A-S7-201 AND A-S7-202
2. SEE SIGNAGE PACKAGE FOR ALL STATION SIGNS

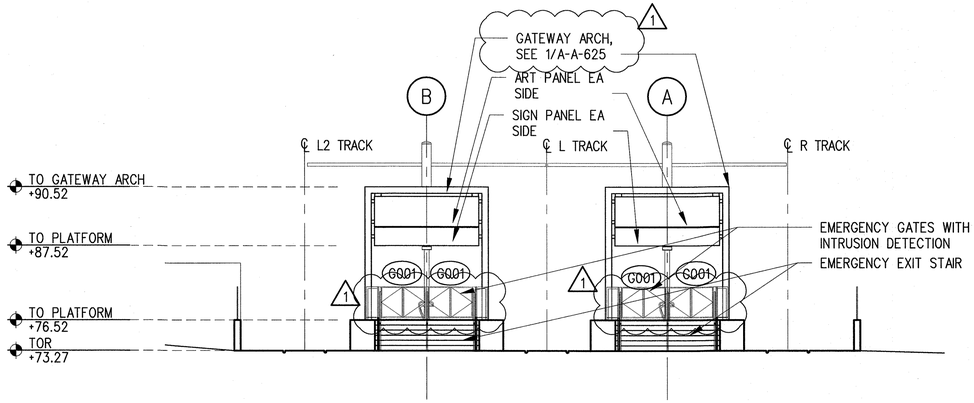

EAST ELEVATION

1/8"=1'-0"

B A-S7-203 A-S7-101

8' 4' 0 8' 16'

SRJV
MAR 03 2014
ISSUED FOR CONSTRUCTION

THE PREPARATION OF THIS DRAWING HAS BEEN FINANCED BY THE TAXES OF THE CITIZENS OF LOS ANGELES COUNTY AND OF THE STATE OF CALIFORNIA.

REV	DATE	BY	APP	REG NO	EXPIRES	SEAL HOLDER	DESCRIPTION
1	1/8/14	JJ	JT	C21914	8/31/15	JOHN TRAUTMANN	ECI 79
0	5/30/13	CS	JT	C21914	8/31/13	JOHN TRAUTMANN	APPROVED FOR CONSTRUCTION

DESIGNED BY J. JACOBSEN
DRAWN BY M. KHANBABIAN
CHECKED BY C. SUERO
IN CHARGE J. TRAUTMANN
DATE 5/30/13

LICENSED ARCHITECT JOHN P. TRAUTMANN No. C21914 Exp. 08-31-15 ARCHITECTURAL STATE OF CALIFORNIA

Exposition Metro Line Construction Authority
Expo
Exposition Construction Authority Approved for Construction Drawings - AFC
FEB 28 2014

EXPO SKANSKA RADOS

444 South Flower Street
Suite 2200
Los Angeles, CA 90071
TEL (213) 443-7463
FAX (213) 362-9481

PARSONS BRINCKERHOFF

CURRENT STATUS

EXPOSITION LRT PROJECT- PHASE 2
COLORADO/4TH STREET STATION
ELEVATIONS
SHEET 1 OF 3

CONTRACT NO XP8902-002
DRAWING NO A-S7-203
REV 1
SCALE 1/4" = 1'-0"
SHEET NO

C:\Users\jacobsenj\Documents\Expo2\PDF\ECI79\exp02-A-S7-203.dwg
11-Feb-14 2:40 PM Jacobsen, John J.

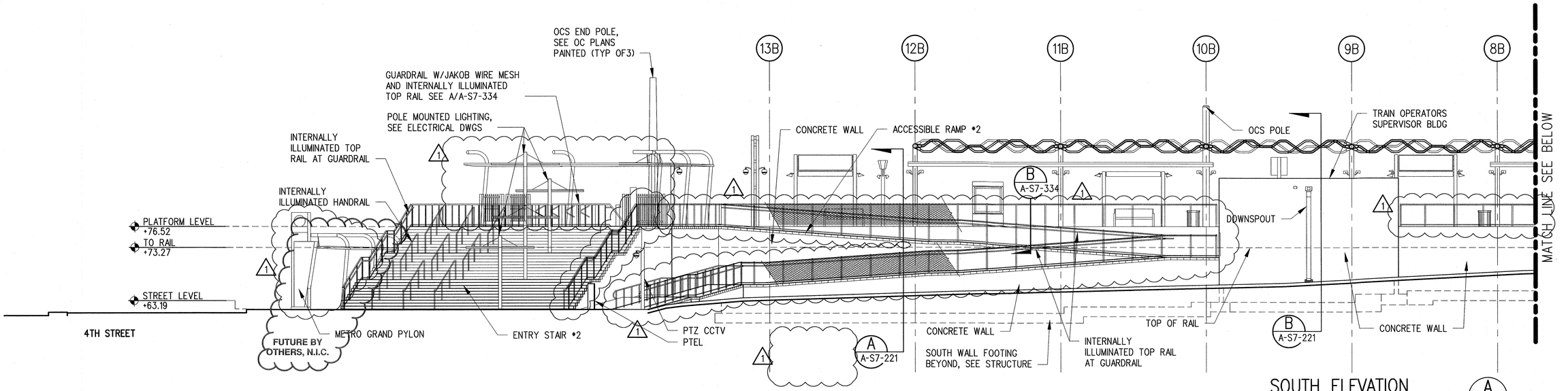

SOUTH ELEVATION

1/8"=1'-0"

A A-S7-205 A-S7-101

NOTE:
1. FOR PLATFORM ELEVATION INFORMATION, SEE A-S7-201 AND A-S7-202
2. SEE A-S7-332 FOR ACCESSIBLE RAMP *2 INFORMATION

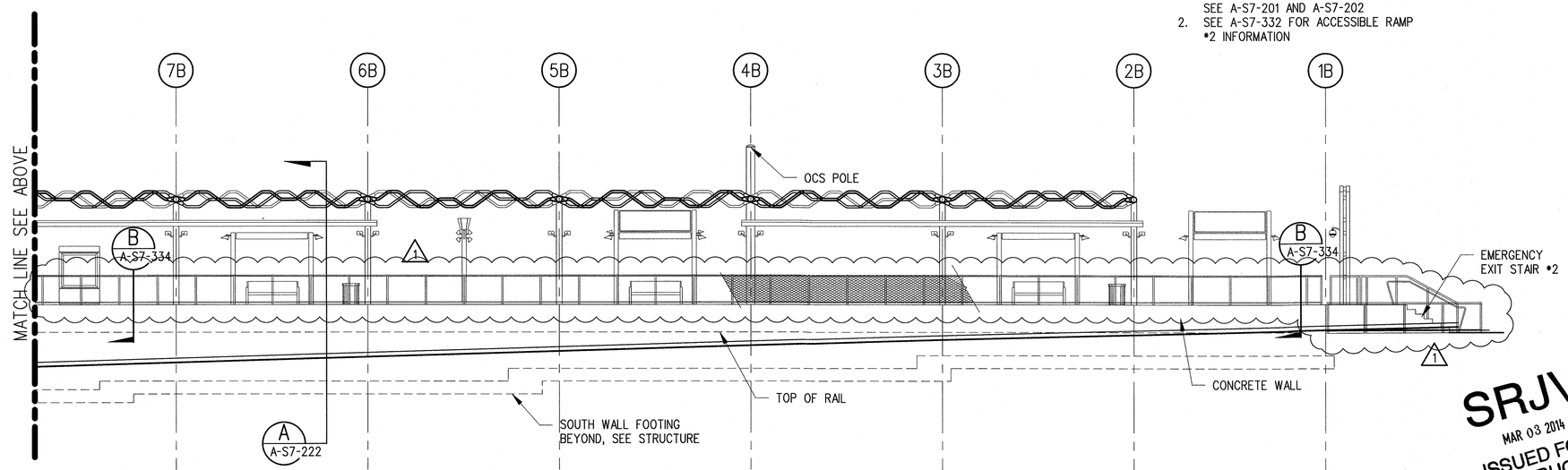

SOUTH ELEVATION (CONT)

1/8"=1'-0"

B A-S7-204 A-S7-101

NOTE:
1. FOR PLATFORM ELEVATION INFORMATION SEE A-S7-201 AND A-S7-202
2. SEE SIGNAGE PACKAGE FOR ALL STATION SIGNS

8' 4' 0 8' 16'

SRJV
MAR 03 2014
ISSUED FOR CONSTRUCTION

THE PREPARATION OF THIS DRAWING HAS BEEN FINANCED BY THE TAXES OF THE CITIZENS OF LOS ANGELES COUNTY AND OF THE STATE OF CALIFORNIA.

REV	DATE	BY	APP	REG NO	EXPIRES	SEAL HOLDER	DESCRIPTION
1	1/8/14	JJ	JT	C21914	8/31/15	JOHN TRAUTMANN	ECI 79
0	5/30/13	CS	JT	C21914	8/31/13	JOHN TRAUTMANN	APPROVED FOR CONSTRUCTION

DESIGNED BY J. JACOBSEN
DRAWN BY M. KHANBABIAN
CHECKED BY C. SUERO
IN CHARGE J. TRAUTMANN
DATE 5/30/13

LICENSED ARCHITECT JOHN P. TRAUTMANN No. C21914 Exp. 08-31-15 ARCHITECTURAL STATE OF CALIFORNIA

Exposition Metro Line Construction Authority
Expo
Exposition Construction Authority Approved for Construction Drawings - AFC
FEB 28 2014

EXPO SKANSKA RADOS

444 South Flower Street
Suite 2200
Los Angeles, CA 90071
TEL (213) 443-7463
FAX (213) 362-9481

PARSONS BRINCKERHOFF

CURRENT STATUS

EXPOSITION LRT PROJECT- PHASE 2
COLORADO/4TH STREET STATION
ELEVATIONS
SHEET 2 OF 3

CONTRACT NO XP8902-002
DRAWING NO A-S7-204
REV 1
SCALE 1/8" = 1'-0"
SHEET NO

C:\Users\jacobsenj\Documents\Expo2\PDF\ECI79\exp02-A-S7-204.dwg
11-Feb-14 2:24 PM Jacobsen, John J.

(DRFI 10615)

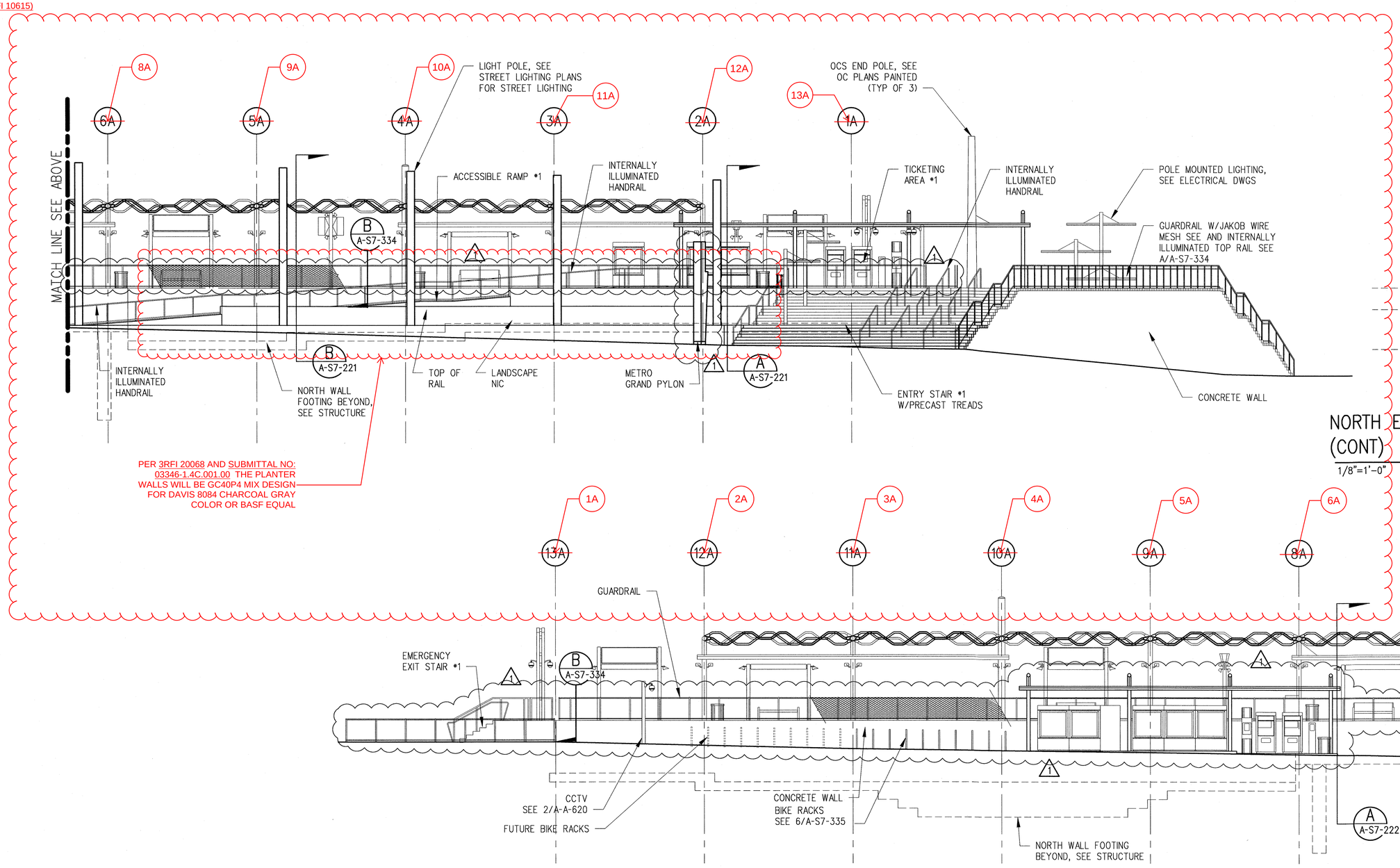

PER 3RFI 20068 AND SUBMITTAL NO: 03346-1.4C.001.00 THE PLANTER WALLS WILL BE GC40P4 MIX DESIGN FOR DAVIS 8084 CHARCOAL GRAY COLOR OR BASF EQUAL

NORTH ELEVATION (CONT)

1/8"=1'-0"

A / A-S7-205 A-S7-101

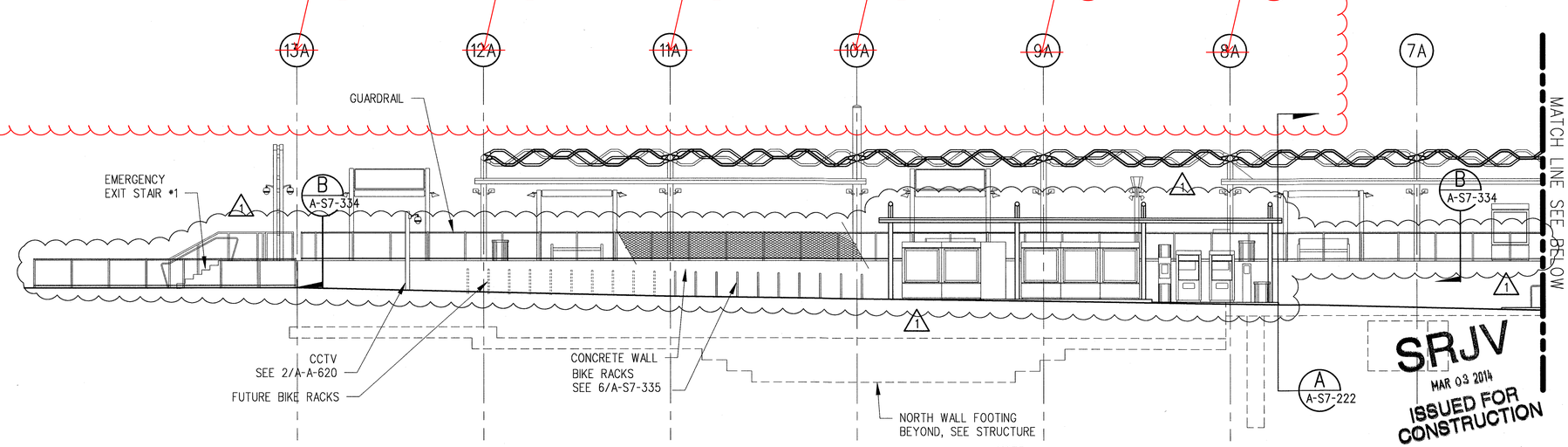

SRJV
MAR 03 2014
ISSUED FOR CONSTRUCTION

NOTE:
1. FOR PLATFORM ELEVATION INFORMATION, SEE A-S7-201 AND A-S7-202
2. SEE A-S7-331 FOR ACCESSIBLE RAMP *1 INFORMATION
3. SEE SIGNAGE PACKAGE FOR ALL STATION SIGNS

8' 4' 0 8' 16'

NORTH ELEVATION

1/8"=1'-0"

B / A-S7-205 A-S7-101

THE PREPARATION OF THIS DRAWING HAS BEEN FINANCED BY THE TAXES OF THE CITIZENS OF LOS ANGELES COUNTY AND OF THE STATE OF CALIFORNIA.

REV	DATE	BY	APP	REG NO	EXPIRES	SEAL HOLDER	DESCRIPTION
1	1/8/14	JJ	JT	C21914	8/31/15	JOHN TRAUTMANN	ECI 79
0	5/30/13	CS	JT	C21914	8/31/13	JOHN TRAUTMANN	APPROVED FOR CONSTRUCTION

DESIGNED BY J. JACOBSEN
DRAWN BY M. KHANBABIAN
CHECKED BY C. SUERO
IN CHARGE J. TRAUTMANN
DATE 5/30/13

LICENSED ARCHITECT JOHN P. TRAUTMANN No. C21914 Exp. 08-31-15 ARCHITECTURAL STATE OF CALIFORNIA

Exposition Metro Line Construction Authority
Expo
Exposition Construction Authority Approved for Construction Drawings - AFC
FEB 28 2014

EXPO SKANSKA RADOS

444 South Flower Street
Suite 2200
Los Angeles, CA 90071
TEL (213) 443-7463
FAX (213) 362-9481

PARSONS BRINCKERHOFF

CURRENT STATUS

EXPOSITION LRT PROJECT- PHASE 2
COLORADO/4TH STREET STATION
ELEVATIONS
SHEET 3 OF 3

CONTRACT NO XP8902-002
DRAWING NO A-S7-205
REV 1
SCALE 1/8" = 1'-0"
SHEET NO

C:\projectwise\pb\projectwiseinit\jacobsenjj\dms11025\expo2-A-S7-205.dwg
25-Feb-14 11:04 AM Jacobsen, John J.

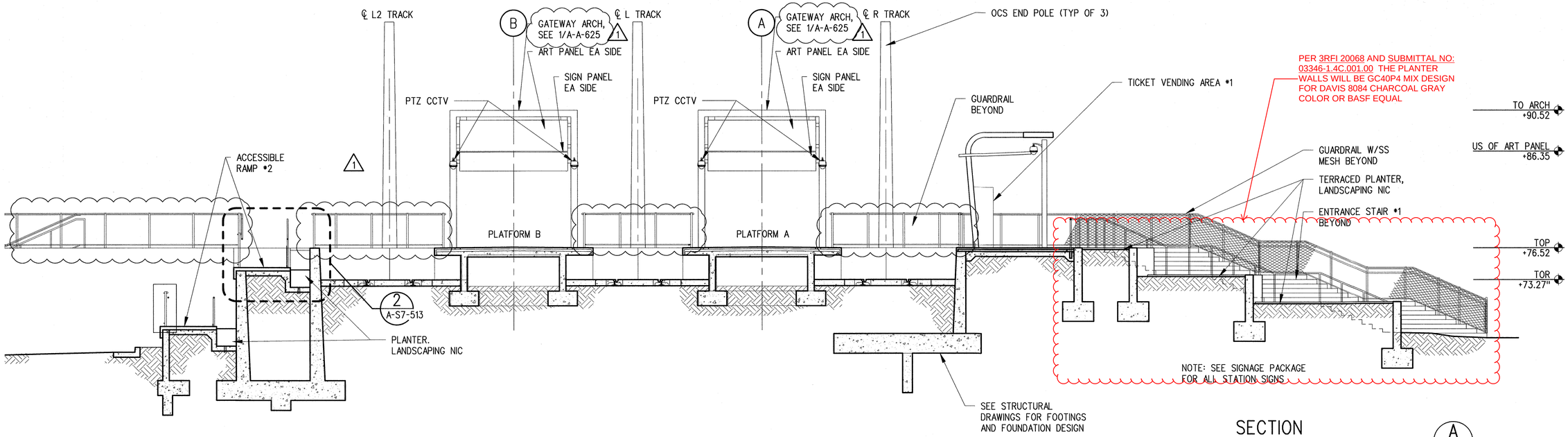

SECTION A A-S7-221 A-S7-101
3/16"=1'-0"

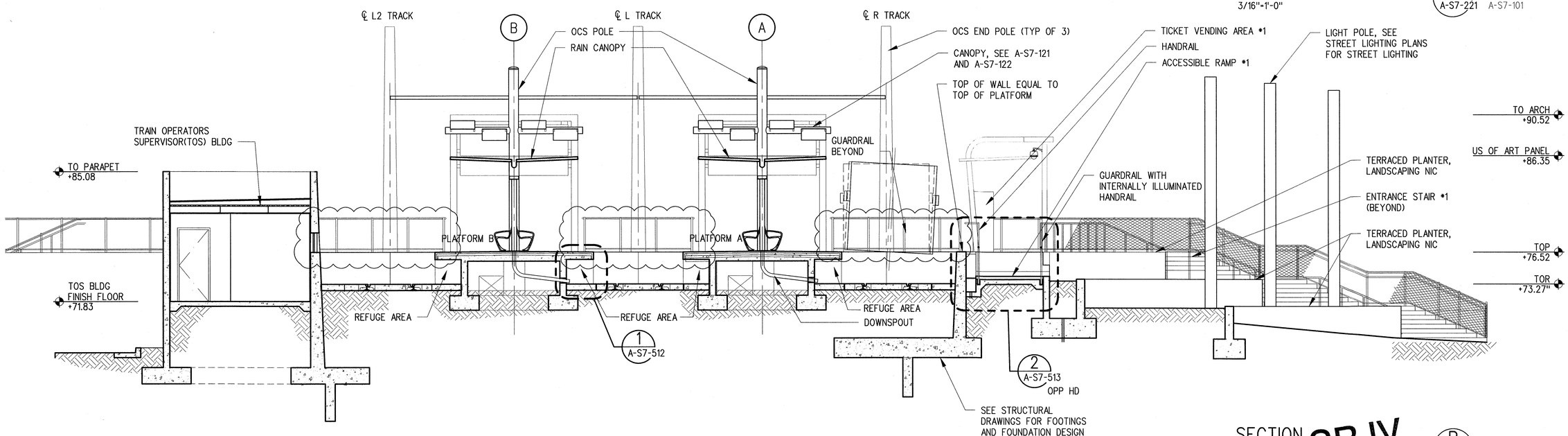

SECTION B A-S7-221 A-S7-101
3/16"=1'-0"

SRJV
MAR 03 2014
ISSUED FOR CONSTRUCTION

4' 0 4' 8' 12'

THE PREPARATION OF THIS DRAWING HAS BEEN FINANCED BY THE TAXES OF THE CITIZENS OF LOS ANGELES COUNTY AND OF THE STATE OF CALIFORNIA.

REV	DATE	BY	APP	REG NO	EXPIRES	SEAL HOLDER	DESCRIPTION
1	2/19/14	JJ	JT	C21914	8/31/15	JOHN TRAUTMANN	ECI 79
0	5/30/13	CS	JT	C21914	8/31/13	JOHN TRAUTMANN	APPROVED FOR CONSTRUCTION

DESIGNED BY J. JACOBSEN
DRAWN BY M. KHANBABIAN
CHECKED BY C. SUERO
IN CHARGE J. TRAUTMANN
DATE 5/30/13

LICENSED ARCHITECT JOHN P. TRAUTMANN No. C21914 Exp. 08-31-15 ARCHITECTURAL STATE OF CALIFORNIA

Exposition Metro Line Construction Authority
Expo
Exposition Construction Authority Approved for Construction Drawings - AFC
FEB 28 2014
EXPO SKANSKA RADOS
444 South Flower Street
Suite 2200
Los Angeles, CA 90071
TEL (213) 443-7463
FAX (213) 362-9481
PARSONS BRINCKERHOFF
CURRENT STATUS

EXPOSITION LRT PROJECT- PHASE 2
COLORADO/4TH STREET STATION
SECTIONS
SHEET 1 OF 3

CONTRACT NO XP8902-002
DRAWING NO A-S7-221
REV 1
SCALE 3/16" = 1'-0"
SHEET NO

C:\projectwise\pb\projectwiseint\jacobsenj\dms11025\expo2-A-S7-221.dwg
25-Feb-14 10:56 AM Jacobsen, John J

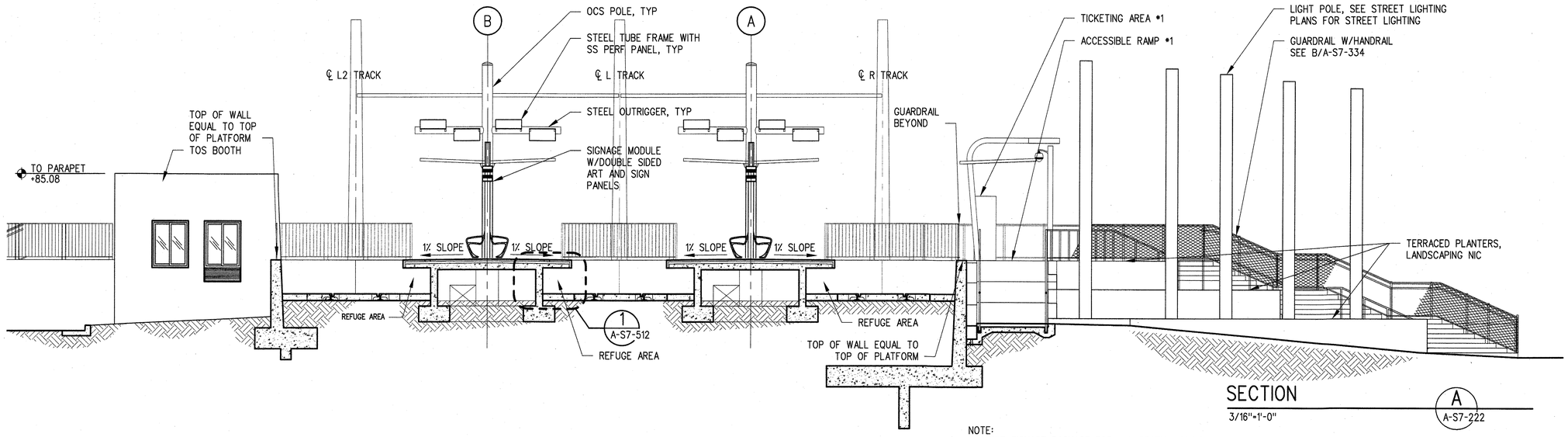

SECTION A

3/16"=1'-0"

A-S7-222

NOTE:
1. SEE SIGNAGE PACKAGE FOR ALL STATION SIGNS
2. SEE CIVIL DRAWINGS FOR STAIR ELEVATIONS

4' 0 4' 8' 12'

SRJV
JUN 24 2013
ISSUED FOR CONSTRUCTION

THE PREPARATION OF THIS DRAWING HAS BEEN FINANCED BY THE TAXES OF THE CITIZENS OF LOS ANGELES COUNTY AND OF THE STATE OF CALIFORNIA.

REV	DATE	BY	APP	REG NO	EXPIRES	SEAL HOLDER	DESCRIPTION
0	5/30/13	CS	JT	C21914	8/31/13	JOHN TRAUTMANN	APPROVED FOR CONSTRUCTION

DESIGNED BY J. JACOBSEN
DRAWN BY M. KHANBABIAN
CHECKED BY C. SUERO
IN CHARGE J. TRAUTMANN
DATE 5/30/13

LICENSED ARCHITECT JOHN P. TRAUTMANN No. C21914 Exp. 08-31-13 ARCHITECTURAL STATE OF CALIFORNIA

Exposition Metro Line Construction Authority
Expo
Exposition Construction Authority
Approved for Construction
Drawings - AFC
JUN 21 2013

EXPO SKANSKA RADOS

444 South Flower Street
Suite 2200
Los Angeles, CA 90071
TEL (213) 443-7463
FAX (213) 362-9481

PARSONS BRINCKERHOFF

CURRENT STATUS

EXPOSITION LRT PROJECT- PHASE 2
COLORADO/4TH STREET STATION
SECTIONS
SHEET 2 OF 3

CONTRACT NO XP8902-002
DRAWING NO A-S7-222
REV 0
SCALE 3/16" = 1'-0"
SHEET NO

C:\Users\khanbabianm\Desktop\sheet-pop\expo2-A-S7-222.dwg
Khanbabian, Melineh 29-May-13 9:07 AM

REF RFI 10526 TO BE INCORPORATED ECI 00079

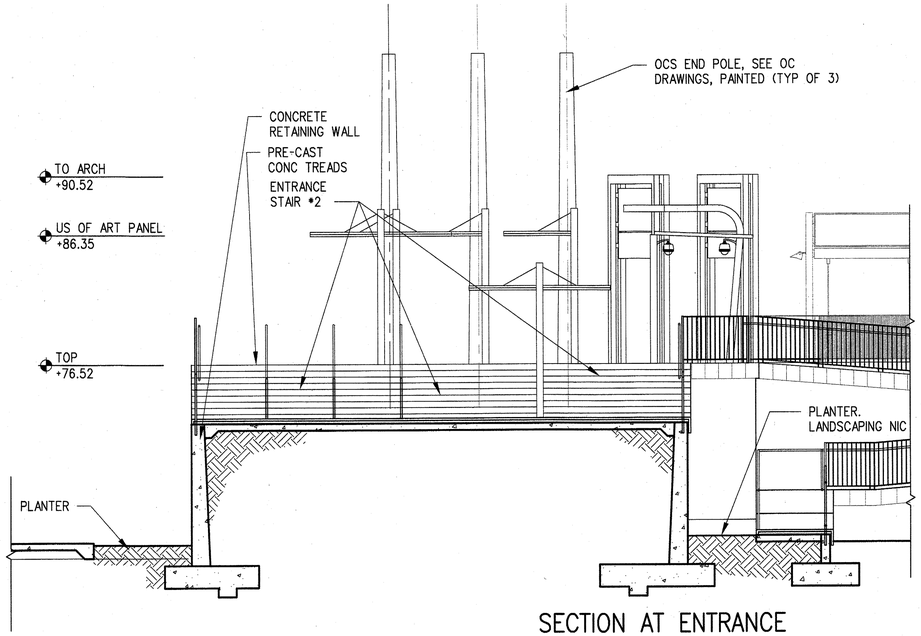

SECTION AT ENTRANCE STAIR #2

3/16"=1'-0" C A-S7-223 A-S7-101

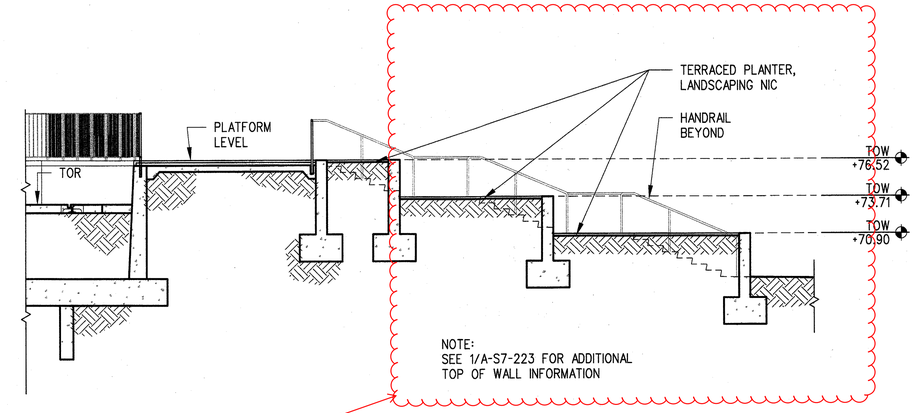

PER 3RFI 20068 AND SUBMITTAL NO: 03346-1.4C.001.00 THE PLANTER WALLS WILL BE GC40P4 MIX DESIGN FOR DAVIS 8084 CHARCOAL GRAY COLOR OR BASF EQUAL

SECTION AT PLANTER

3/16"=1'-0" A A-S7-223 A-S7-101

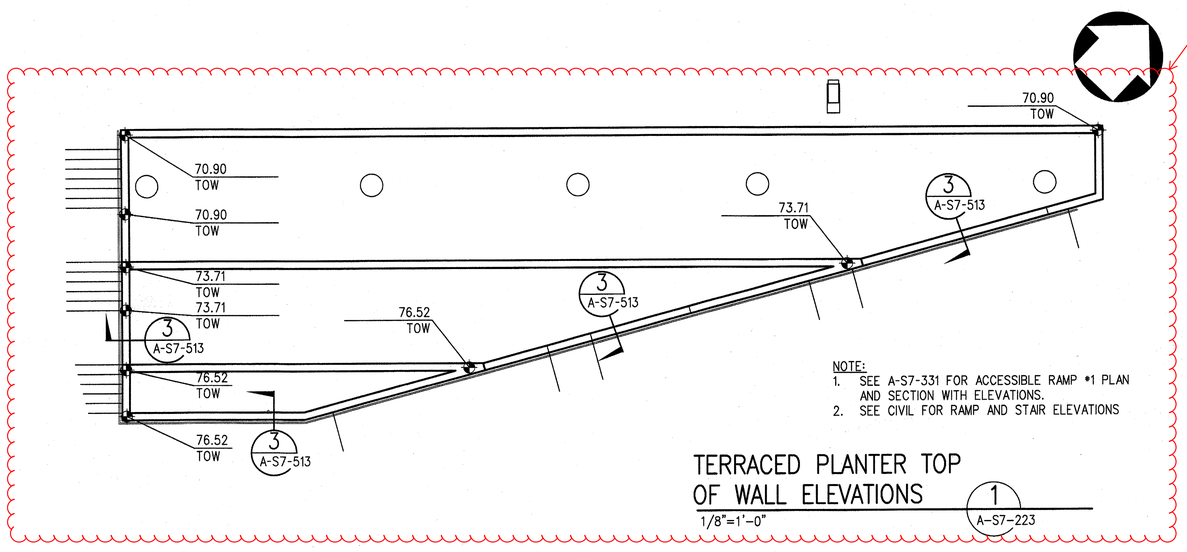

TERRACED PLANTER TOP OF WALL ELEVATIONS

1/8"=1'-0" 1 A-S7-223

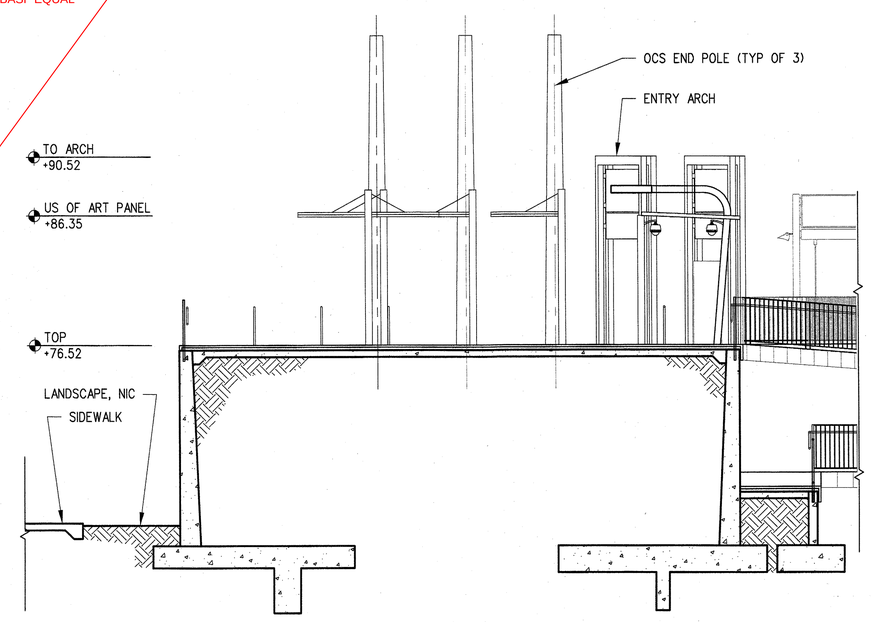

SECTION AT UPPER PLAZA

3/16"=1'-0" B A-S7-223 A-S7-101

4' 0 4' 8' 12'

SRJV JUN 24 2013 ISSUED FOR CONSTRUCTION

THE PREPARATION OF THIS DRAWING HAS BEEN FINANCED BY THE TAXES OF THE CITIZENS OF LOS ANGELES COUNTY AND OF THE STATE OF CALIFORNIA.

REV	DATE	BY	APP	REG NO	EXPIRES	SEAL HOLDER	DESCRIPTION
0	5/30/13	CS	JT	C21914	8/31/13	JOHN TRAUTMANN	APPROVED FOR CONSTRUCTION

DESIGNED BY J. JACOBSEN
DRAWN BY M. KHANBABIAN
CHECKED BY C. SUERO
IN CHARGE J. TRAUTMANN
DATE 5/30/13

LICENSED ARCHITECT JOHN P. TRAUTMANN No. C21914 Exp. 08-31-13 ARCHITECTURAL STATE OF CALIFORNIA

Exposition Metro Line Construction Authority
Expo

Exposition Construction Authority Approved for Construction Drawings - AFC

EXPO SKANSKA RADOS

444 South Flower Street
Suite 2200
Los Angeles, CA 90071
TEL (213) 443-7463
FAX (213) 362-9481

PARSONS BRINCKERHOFF

JUN 21 2013

CURRENT STATUS

EXPOSITION LRT PROJECT- PHASE 2
COLORADO/4TH STREET STATION
SECTIONS
SHEET 3 OF 3

CONTRACT NO XP8902-002
DRAWING NO A-S7-223 REV 0
SCALE 3/16" = 1'-0"
SHEET NO

C:\Users\khanbabiamm\Desktop\sheet-pop\exp02-A-S7-223.dwg
29-May-13 9:07 AM Khanbabian, Melineh

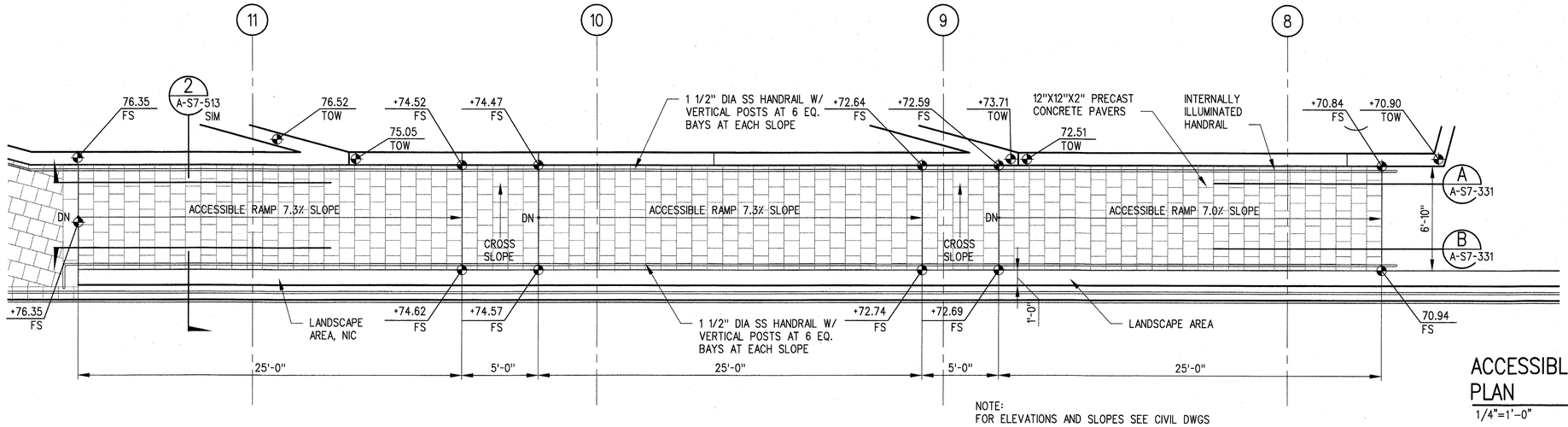

NOTE:
FOR ELEVATIONS AND SLOPES SEE CIVIL DWGS

ACCESSIBLE RAMP #1 PLAN

1/4"=1'-0"

1 / A-S7-331 A-S7-134

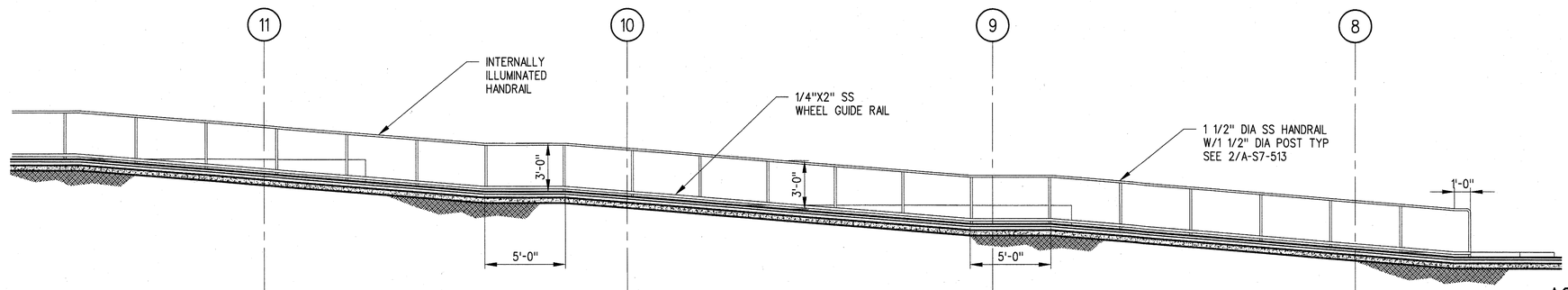

ACCESSIBLE RAMP #1 SECTION

1/4"=1'-0"

A / A-S7-331 A-S7-134

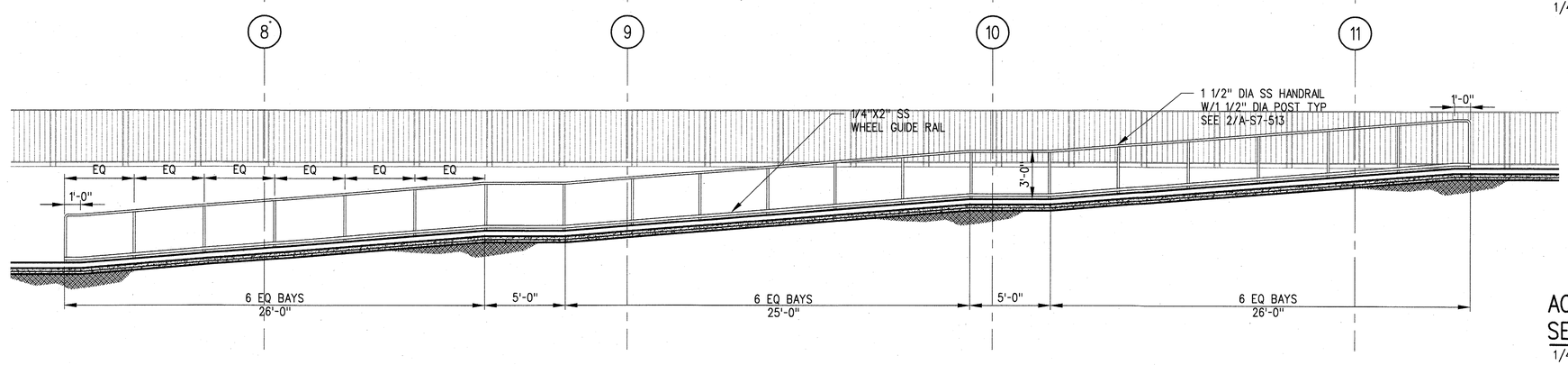

ACCESSIBLE RAMP #1 SECTION

1/4"=1'-0"

B / A-S7-331 A-S7-134

SRJV
JUN 24 2013
ISSUED FOR CONSTRUCTION

4' 2' 0 4' 8'

THE PREPARATION OF THIS DRAWING HAS BEEN FINANCED BY THE TAXES OF THE CITIZENS OF LOS ANGELES COUNTY AND OF THE STATE OF CALIFORNIA.

REV	DATE	BY	APP	REG NO	EXPIRES	SEAL HOLDER	DESCRIPTION
0	5/30/13	CS	JT	C21914	8/31/13	JOHN TRAUTMANN	APPROVED FOR CONSTRUCTION

DESIGNED BY J. JACOBSEN
DRAWN BY M. KHANBABIAN
CHECKED BY C. SUERO
IN CHARGE J. TRAUTMANN
DATE 5/30/13

LICENSED ARCHITECT JOHN P. TRAUTMANN No. C21914 Exp. 08-31-13 ARCHITECTURAL STATE OF CALIFORNIA

Exposition Metro Line Construction Authority
Expo
Exposition Construction Authority Approved for Construction Drawings - AFC
JUN 21 2013

EXPO SKANSKA RADOS

444 South Flower Street
Suite 2200
Los Angeles, CA 90071
TEL (213) 443-7463
FAX (213) 362-9481

PARSONS BRINCKERHOFF

CURRENT STATUS

EXPOSITION LRT PROJECT- PHASE 2
COLORADO/4TH STREET STATION
ACCESSIBLE RAMP #1

CONTRACT NO XP8902-002
DRAWING NO A-S7-331
REV 0
SCALE 1/4" = 1'-0"
SHEET NO

C:\Users\khanbabianm\Desktop\steel-pop\exp2-A-S7-331.dwg
29-May-13 9:07 AM Khanbabian, Melineh

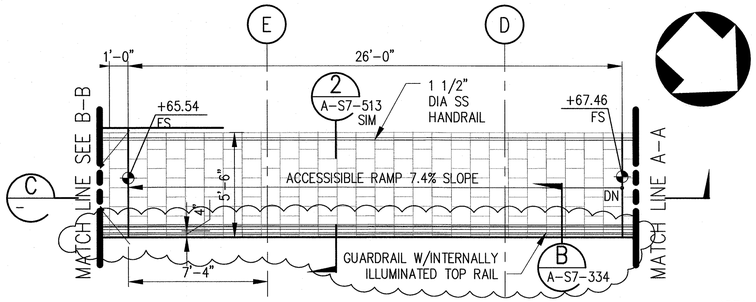

ACCESSIBLE RAMP #2 PLAN

1/4"=1'-0" — 2 A-S7-332 A-S7-134

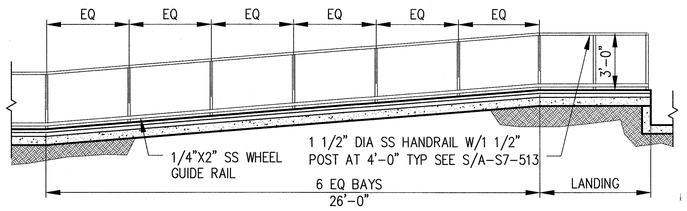

ACCESSIBLE RAMP #2 SECTION

1/4"=1'-0" — C A-S7-332 A-S7-134

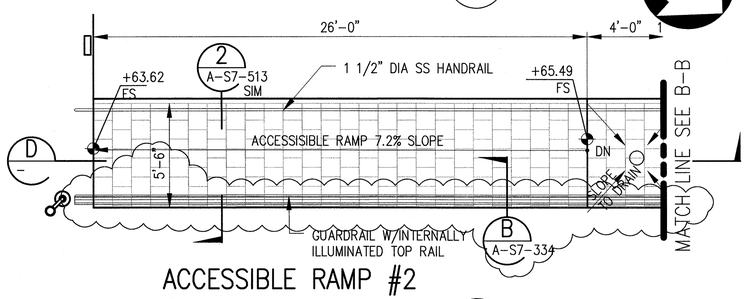

ACCESSIBLE RAMP #2 PLAN

1/4"=1'-0" — 3 A-S7-332 A-S7-134

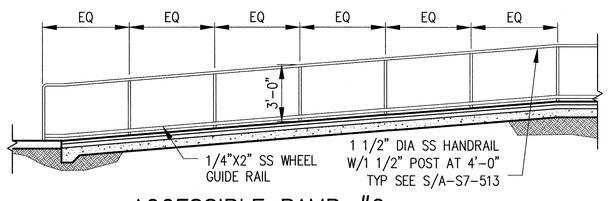

ACCESSIBLE RAMP #2 SECTION

1/4"=1'-0" — D A-S7-332 A-S7-134

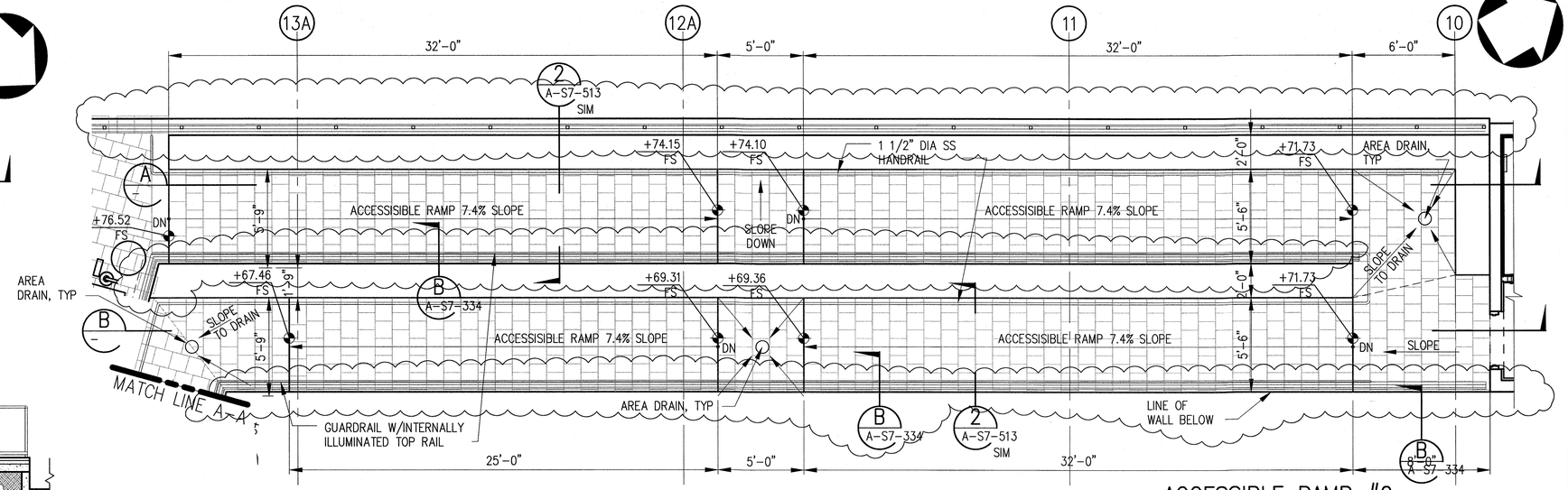

NOTE:
FOR ELEVATIONS AND
SLOPES SEE CIVIL DWGS

ACCESSIBLE RAMP #2 PLAN

1/4"=1'-0" — 1 A-S7-332 A-S7-134

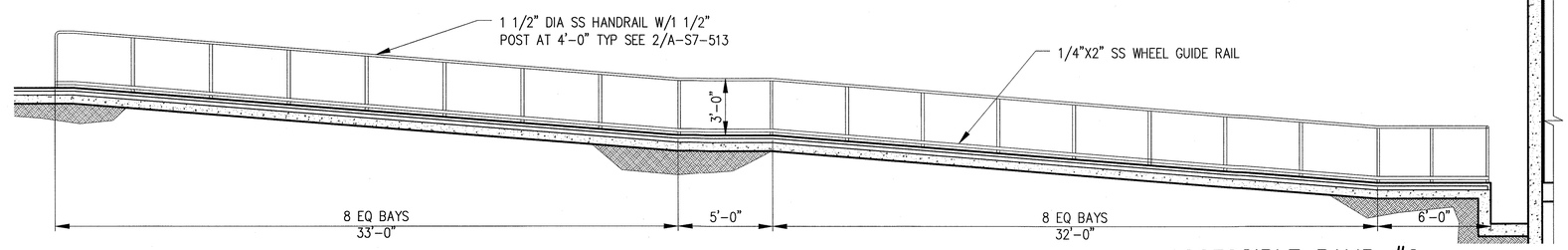

ACCESSIBLE RAMP #2 SECTION

1/4"=1'-0" — A A-S7-332

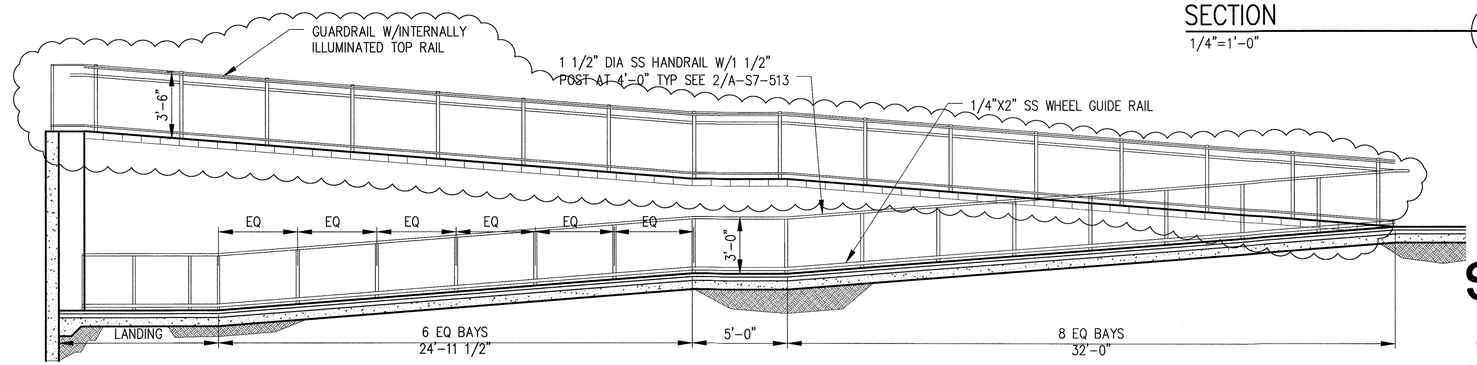

ACCESSIBLE RAMP #2 SECTION

1/4"=1'-0" — B A-S7-332 A-S7-134

4' 2' 0 4' 8'

SRJV
MAR 03 2014
ISSUED FOR CONSTRUCTION

C:\projectwise\pb\projectwise\inf\jacobsenj\dms11025\expo2-A-S7-332.dwg

7-Jan-14 12:23 PM Jay Jacobsen

THE PREPARATION OF THIS DRAWING HAS BEEN FINANCED BY THE TAXES OF THE CITIZENS OF LOS ANGELES COUNTY AND OF THE STATE OF CALIFORNIA.

REV	DATE	BY	APP	REG NO	EXPIRES	SEAL HOLDER	DESCRIPTION
1	1/8/14	JJ	JT	C21914	8/31/15	JOHN TRAUTMANN	ECI 79
0	5/30/13	CS	JT	C21914	8/31/13	JOHN TRAUTMANN	APPROVED FOR CONSTRUCTION

DESIGNED BY J. JACOBSEN
DRAWN BY M. KHANBABIAN
CHECKED BY C. SUERO
IN CHARGE J. TRAUTMANN
DATE 5/30/13

LICENSED ARCHITECT JOHN P. TRAUTMANN No. C21914 Exp. 08-31-15 ARCHITECTURAL STATE OF CALIFORNIA

Exposition Metro Line Construction Authority
Expo
Exposition Construction Authority
Approved for Construction
Drawings - AFC
FEB 28 2014

SKANSKA RADOS

444 South Flower Street
Suite 2200
Los Angeles, CA 90071
TEL (213) 443-7463
FAX (213) 362-9481

PARSONS BRINCKERHOFF

CURRENT STATUS

EXPOSITION LRT PROJECT- PHASE 2
COLORADO/4TH STREET STATION
ACCESSIBLE RAMP #2

CONTRACT NO XP8902-002
DRAWING NO A-S7-332 REV 1
SCALE 1/4" = 1'-0"
SHEET NO

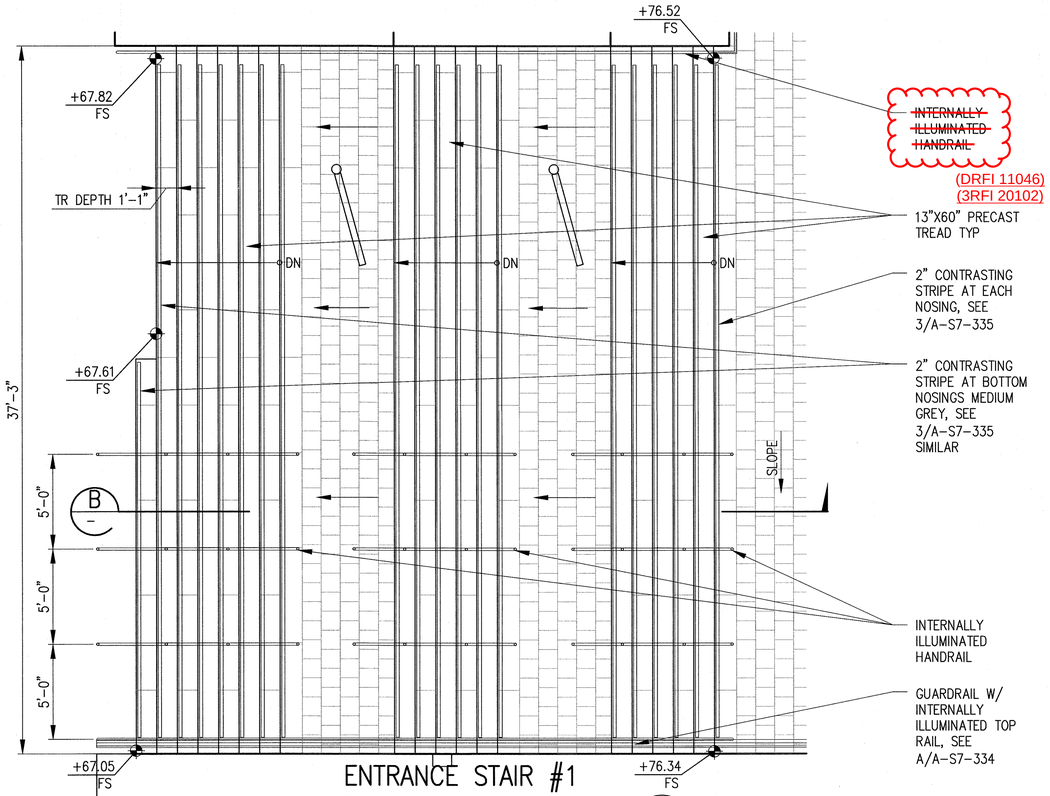

ENTRANCE STAIR #1
PLAN
1/4"=1'-0"
2
A-S7-333

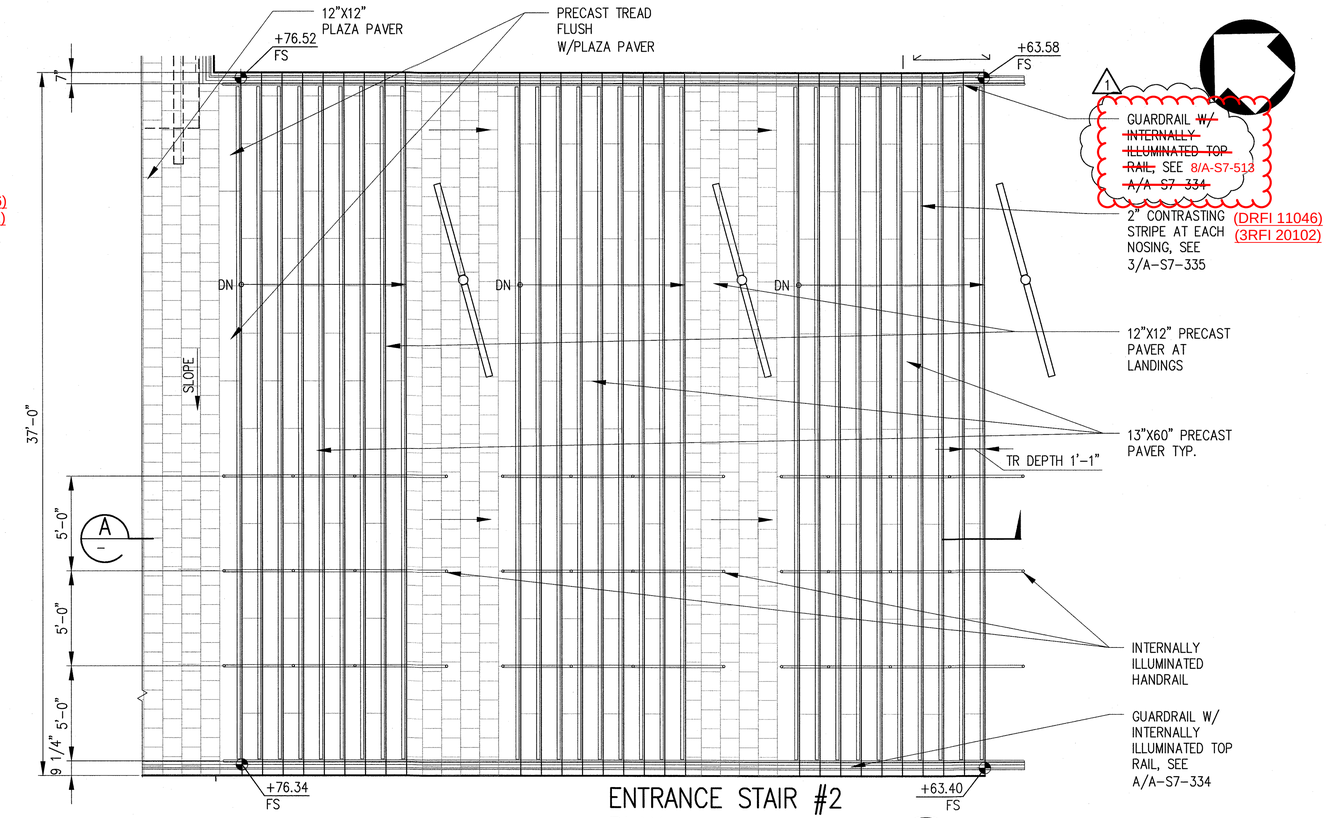

ENTRANCE STAIR #2
PLAN
1/4"=1'-0"
1
A-S7-333

NOTES: 1. SEE CIVIL DRAWINGS FOR TREAD AND LANDING SLOPES
2. SEE CIVIL DRAWINGS FOR STAIR ELEVATIONS

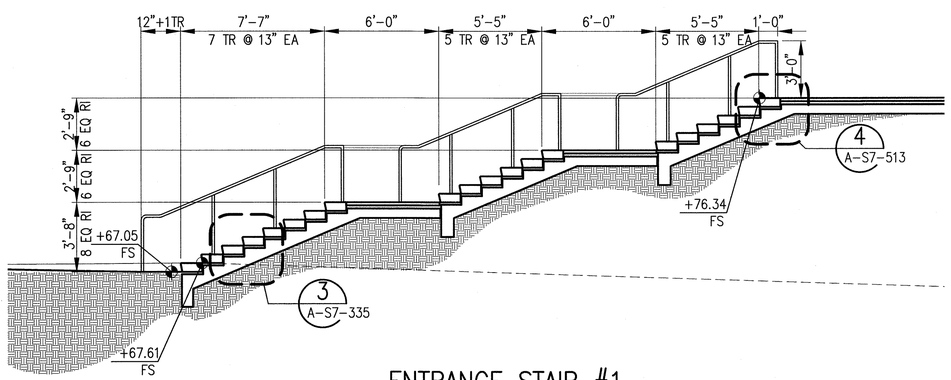

ENTRANCE STAIR #1
SECTION
1/4"=1'-0"
B
A-S7-333

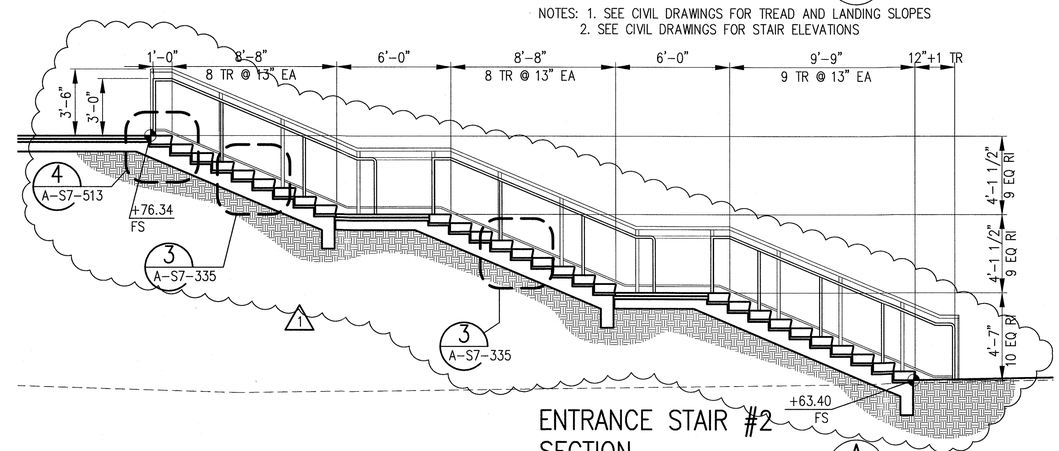

ENTRANCE STAIR #2
SECTION
1/4"=1'-0"
A
A-S7-333

4' 2' 0 4' 8'

SRJV
MAR 03 2014
ISSUED FOR CONSTRUCTION

THE PREPARATION OF THIS DRAWING HAS BEEN FINANCED BY THE TAXES OF THE CITIZENS OF LOS ANGELES COUNTY AND OF THE STATE OF CALIFORNIA.

REV	DATE	BY	APP	REG NO	EXPIRES	SEAL HOLDER	DESCRIPTION
1	1/8/14	JJ	JT	C21914	8/31/15	JOHN TRAUTMANN	ECI 79
0	5/30/13	CS	JT	C21914	8/31/13	JOHN TRAUTMANN	APPROVED FOR CONSTRUCTION

DESIGNED BY J. JACOBSEN
DRAWN BY M. KHANBABIAN
CHECKED BY C. SUERO
IN CHARGE J. TRAUTMANN
DATE 5/30/13

LICENSED ARCHITECT JOHN F. TRAUTMANN No. C21914 Exp. 08-31-15 ARCHITECTURAL STATE OF CALIFORNIA

Exposition Metro Line Construction Authority
Expo
Exposition Construction Authority Approved for Construction Drawings - AFC
FEB 28 2014
SKANSKA RADOS
444 South Flower Street
Suite 2200
Los Angeles, CA 90071
TEL (213) 443-7463
FAX (213) 362-9481
PARSONS BRINCKERHOFF
CURRENT STATUS

EXPOSITION LRT PROJECT- PHASE 2
COLORADO/4TH STREET STATION
ENTRANCE STAIRS

CONTRACT NO XP8902-002
DRAWING NO A-S7-333
REV 1
SCALE 1/4" = 1'-0"
SHEET NO

C:\projectwise\pb\projectwisein\jacobsenj\dms11025\expo2-A-S7-333.dwg
7-Jan-14
1:28 PM
Jay Jacobsen

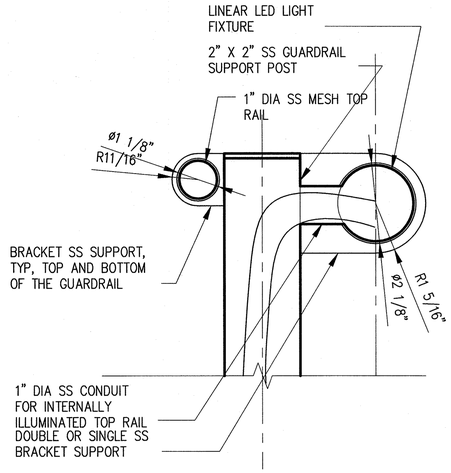

SECTION DETAIL GUARDRAIL (7 / A-S7-334)

3"=1'-0"

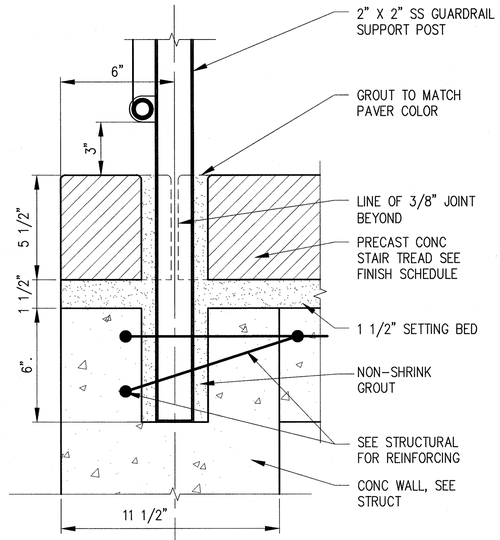

GUARDRAIL SECTION AT PRE-CAST TREAD (5 / A-S7-334)

3"=1'-0"

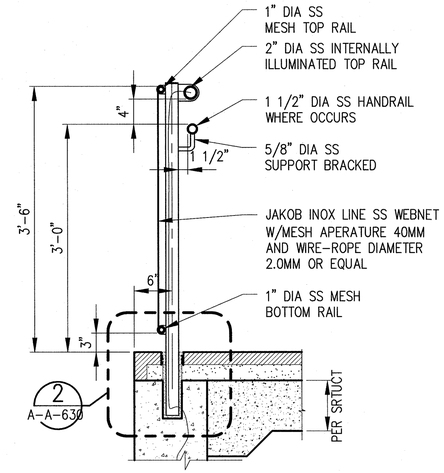

GUARDRAIL SECTION (B / A-S7-334)

1"=1'-0"

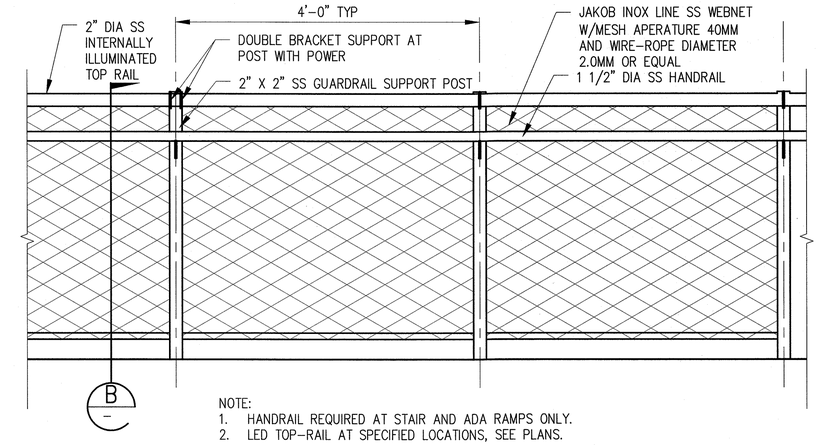

NOTE:
1. HANDRAIL REQUIRED AT STAIR AND ADA RAMPS ONLY.
2. LED TOP-RAIL AT SPECIFIED LOCATIONS, SEE PLANS.

GUARDRAIL ELEVATION (A / A-S7-334)

1"=1'-0"

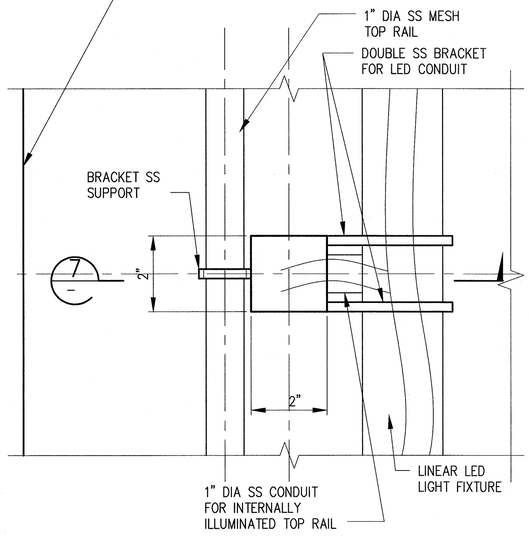

PLAN DETAIL GUARDRAIL (8 / A-S7-334)

3"=1'-0"

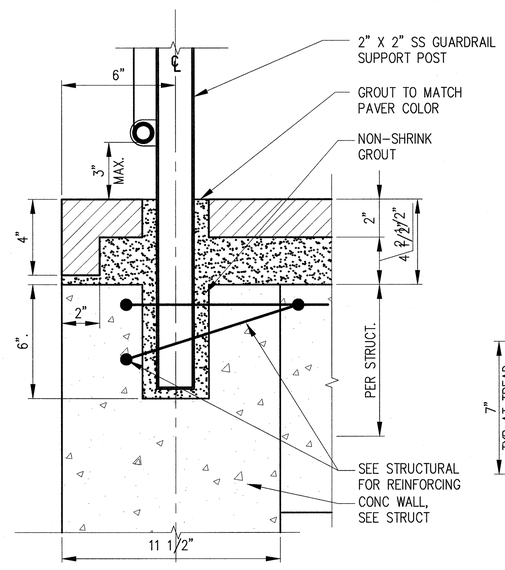

GUARDRAIL SECTION AT PAVER (6 / A-S7-334)

3"=1'-0"

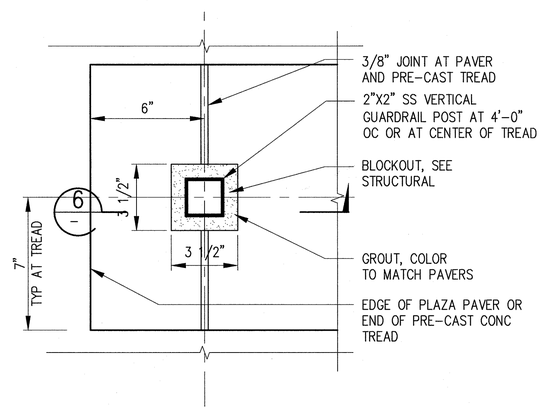

GUARDRAIL POST AT PAVER AND TREAD (4 / A-S7-334)

3"=1'-0"

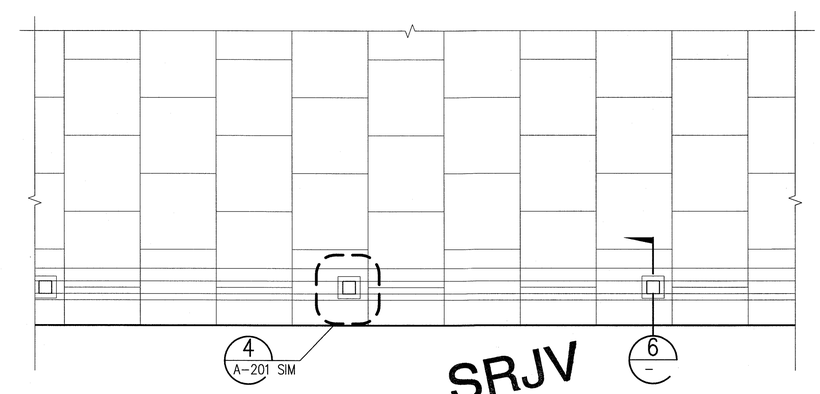

SRJV
MAR 03 2014
ISSUED FOR CONSTRUCTION

GUARDRAIL PLAN (2 / A-S7-334)

1"=1'-0"

THE PREPARATION OF THIS DRAWING HAS BEEN FINANCED BY THE TAXES OF THE CITIZENS OF LOS ANGELES COUNTY AND OF THE STATE OF CALIFORNIA.

REV	DATE	BY	APP	REG NO	EXPIRES	SEAL HOLDER	DESCRIPTION
0	1/8/14	JJ	JT	C21914	8/31/15	JOHN TRAUTMANN	ECI 79

DESIGNED BY J. JACOBSEN
DRAWN BY M. KHANBABIAN
CHECKED BY C. SUERO
IN CHARGE J. TRAUTMANN
DATE 1/8/14

LICENSED ARCHITECT — JOHN P. TRAUTMANN No. C21914 Exp. 08-31-15 ARCHITECTURAL — STATE OF CALIFORNIA

Exposition Metro Line Construction Authority
Expo
Exposition Construction Authority Approved for Construction Drawings - AFC
FEB 28 2014

SKANSKA RADOS
444 South Flower Street
Suite 2200
Los Angeles, CA 90071
TEL (213) 443-7463
FAX (213) 362-9481

PARSONS BRINCKERHOFF

CURRENT STATUS

EXPOSITION LRT PROJECT- PHASE 2
COLORADO/4TH STREET STATION
PLAZA LEVEL
HANDRAIL AND GUARDRAIL DETAILS

CONTRACT NO XP8902-002
DRAWING NO A-S7-334
REV 0
SCALE 1" = 1'-0"
SHEET NO

C:\projectwise\pb\projectwise\in\jacobsenj\dms11025\expo2-A-S7-334.dwg
7-Jan-14 10:51 AM Jay Jacobsen

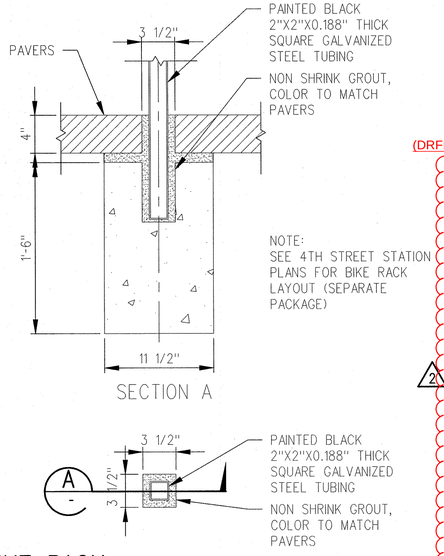

BIKE RACK EMBEDMENT DETAIL

1 1/2"=1'-0" — 7 / A-S7-335

(DRFI 10480)

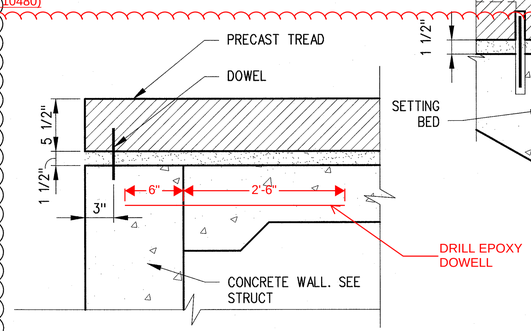

PRECAST TREAD AT WEST WALL

1 1/2"=1'-0" — 5 / A-S7-335 A-S7-333

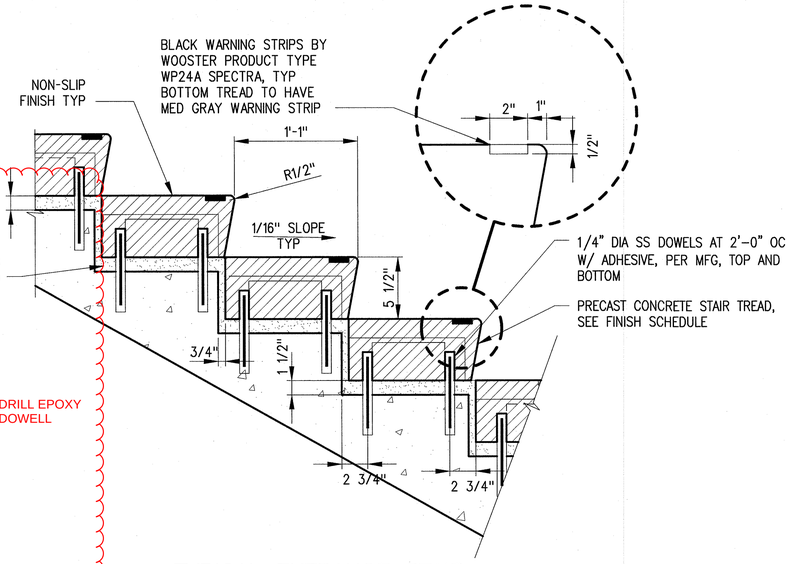

TYPICAL ENTRANCE STAIR PRECAST TREAD DETAIL

1 1/2"=1'-0" — 3 / A-S7-335

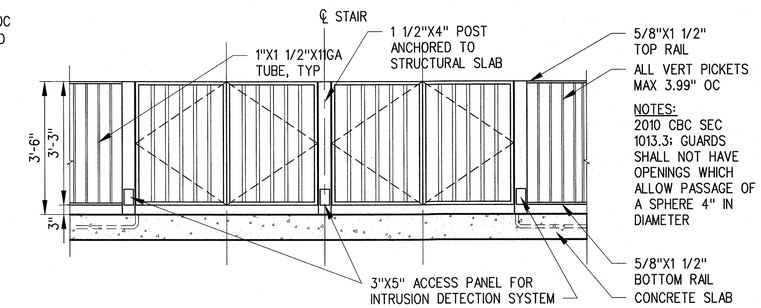

EMERGENCY GATE DETAIL ELEVATION

1/2"=1'-0" — 1 / A-S7-335

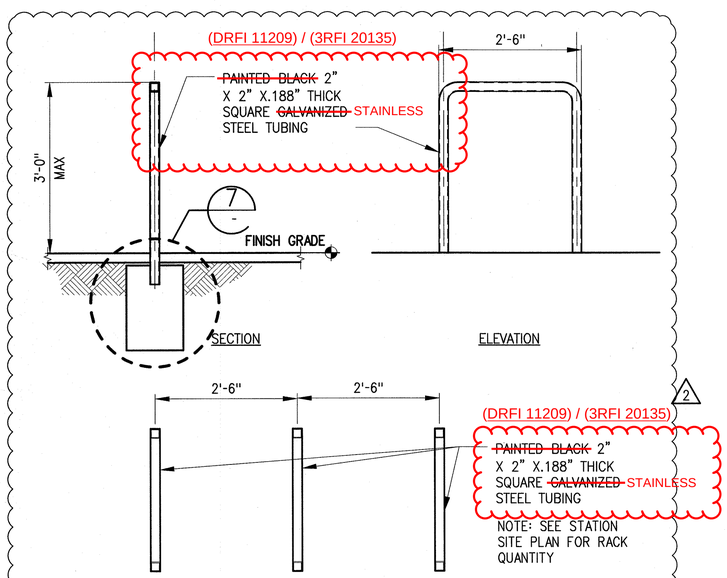

PARTIAL BICYCLE RACK DETAIL

3/4"=1'-0" — 6 / A-S7-335

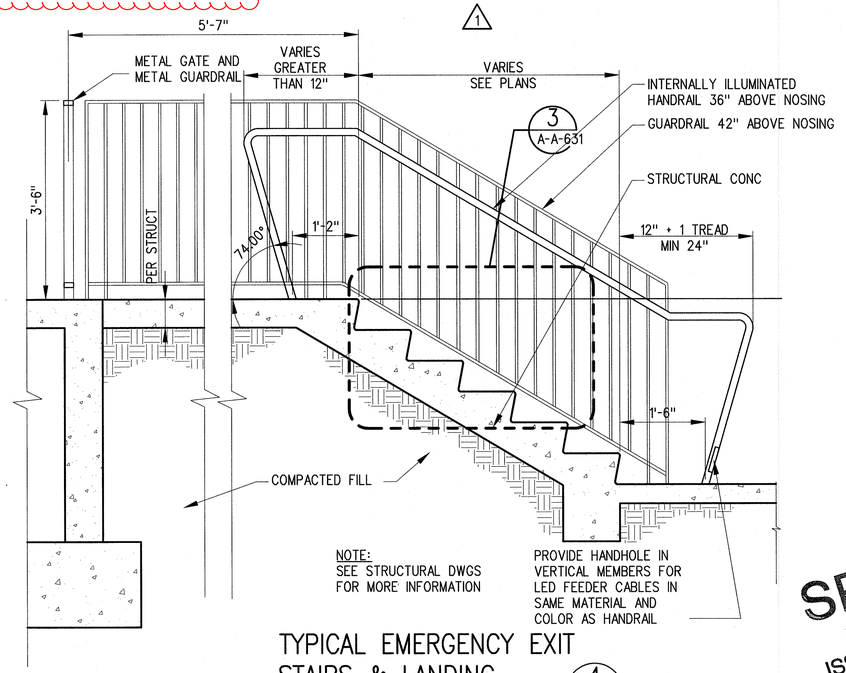

TYPICAL EMERGENCY EXIT STAIRS & LANDING

3/4"=1'-0" — 4 / A-S7-335

SRJV
OCT 01 2014
ISSUED FOR CONSTRUCTION

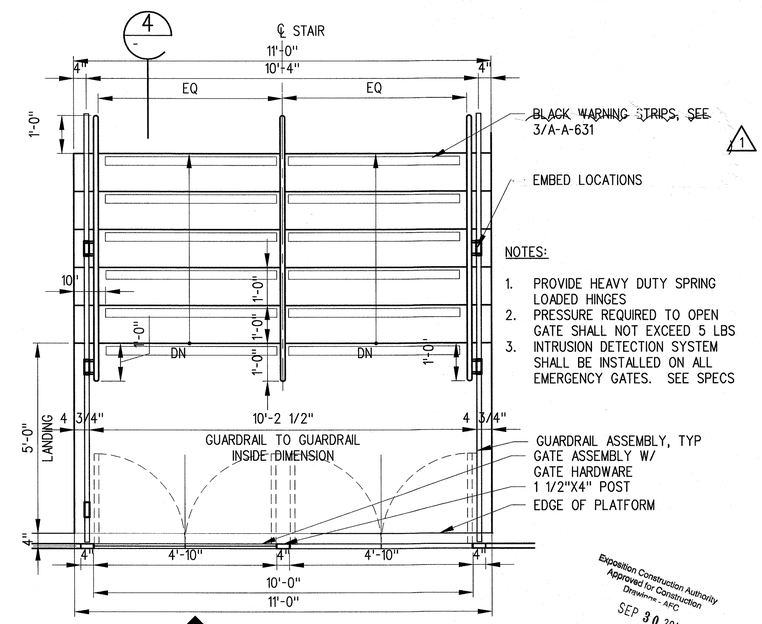

NOTES:

1. PROVIDE HEAVY DUTY SPRING LOADED HINGES
2. PRESSURE REQUIRED TO OPEN GATE SHALL NOT EXCEED 5 LBS
3. INTRUSION DETECTION SYSTEM SHALL BE INSTALLED ON ALL EMERGENCY GATES. SEE SPECS

Exposition Construction Authority Approved for Construction Drawing - AFC SEP 30 2014

EMERGENCY GATE DETAIL PLAN

1/2"=1'-0" — 2 / A-S7-335

THE PREPARATION OF THIS DRAWING HAS BEEN FINANCED BY THE TAXES OF THE CITIZENS OF LOS ANGELES COUNTY AND OF THE STATE OF CALIFORNIA.

REV	DATE	BY	APP	REG NO	EXPIRES	SEAL HOLDER	DESCRIPTION
2	7/22/14	JJ	JT	C21914	8/31/15	JOHN TRAUTMANN	ECI 98
1	1/8/14	JJ	JT	C21914	8/31/15	JOHN TRAUTMANN	ECI 79
0	5/30/13	CS	JT	C21914	8/31/13	JOHN TRAUTMANN	APPROVED FOR CONSTRUCTION

DESIGNED BY J. JACOBSEN
DRAWN BY M. KHANBABIAN
CHECKED BY 21914
IN CHARGE J. TRAUTMANN
DATE 5/30/13

LICENSED ARCHITECT — JOHN P. TRAUTMANN — No. C21914 — Exp. 08-31-15 — ARCHITECTURAL — STATE OF CALIFORNIA

Exposition Metro Line Construction Authority
Expo

EXPO SKANSKA RADOS
444 South Flower Street
Suite 2200
Los Angeles, CA 90071
TEL (213) 443-7463
FAX (213) 362-9481

PARSONS BRINCKERHOFF

CURRENT STATUS

EXPOSITION LRT PROJECT- PHASE 2
COLORADO/4TH STREET STATION
STAIRWAY AND EMERGENCY GATE DETAILS

CONTRACT NO XP8902-002
DRAWING NO A-S7-335
REV 2
SCALE AS NOTED
SHEET NO

C:\projectwise\pb\projectwise\intljacobsenj\dms11025\expo2-A-S7-335.dwg
22-Jul-14 2:33 PM Jacobsen, John J.

DOOR SCHEDULE

DOOR NO.	LOCATION	DOOR TYPE	SIZE			MATERIAL		DETAILS			HARDWARE GROUP	FIRE RATING	REMARKS
			W	H	T	DOOR	FRAME	HEAD	JAMB	SILL			
001	C/S BLDG	A	3'-0"	7'-0"	1-3/4"	HM	HM	2/A-A-640	1/A-A-640	2/A-A-640	08	-	METAL LOUVER W/BIRD SCREEN
002	C/S BLDG	D	3'-0"	6'-8"	-	CK		1/A-A-612	1/A-A-612	1/A-A-612	05	-	CHAIN LINK FENCE
003	TOS BLDG	B	3'-0"	7'-0"	1-3/4"	HM	HM	2/A-A-640	1/A-A-640	2/A-A-640	08	-	
004	TOS BLDG	B	3'-0"	7'-0"	1-3/4"	HM	HM	4/A-S7-414	4/A-S7-414		13	-	UNDERCUT DOOR 1"
005	TOS BLDG	B	3'-0"	7'-0"	1-3/4"	HM	HM	5/A-S7-414	5/A-S7-414		14	-	UNDERCUT DOOR 1"

DOOR TYPE

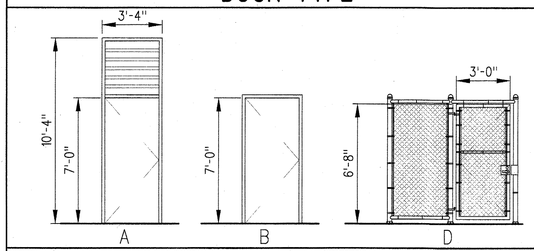

NOTES

1. DOOR 001 AND 003 SHALL HAVE GE STEEL DOOR CONTACT 1078/1076 SERIES OR APPROVED EQUIVALENT INTRUSION DETECTION SYSTEM PRE-INSTALLED.

2. CONTINUOUS CONDUCTORS WITHOUT SPLICES FOR ALL CONTROL WIRING SHALL BE ROUTED INSIDE OF FRAME AND INCLUDE 6-FOOT PIGTAIL LENGTH ON TOP OF DOOR 001, SEE COMMON ELECTRICAL PLANS.

MATERIAL LEGEND

HM- HOLLOW METAL
CK- CHAIN LINK

LOUVER AND GATE SCHEDULE

DOOR NO.	LOCATION	DOOR TYPE	SIZE			MATERIAL		DETAILS			HARDWARE GROUP	FIRE RATING	REMARKS
			W	H	T	DOOR	FRAME	HEAD	JAMB	SILL			
L01	STATION PLATFORM	C	2'-0"	2'-0"	1-3/4"	STL	HM	6/A-A-640	5/A-A-640	6/A-A-640	15	-	ALUM LOUVER W/BIRD SCREEN (DRFI 10587)
L02	C/S BLDG	B	3'-0~~3'-0"~~	5'-4"~~6'-10"~~	2"~~1-3/4"~~	METAL	HM	4/A-A-640	3/A-A-640	4/A-A-640	-	-	METAL LOUVER W/BIRD SCREEN
G01	C/S BLDG	G	3'-0"	3'-6"	-	-	-	-	5/A-A-612	-	15	-	ALUM LOUVERED ACCESS GATE

(DRFI 10587)

LOUVER TYPE

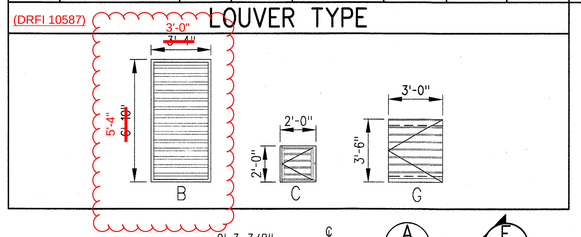

EXITING ANALYSIS

OCCUPANT LOAD COLORADO/ 4TH STREET STATION				
ROOM NAME	OCCUPANCY CLASSIFICATION	ROOM AREA SQ FT	OCCUPANT LOAD FACTOR	NUMBER OF OCCUPANTS
C/S BLDG	S-2	700	300	3

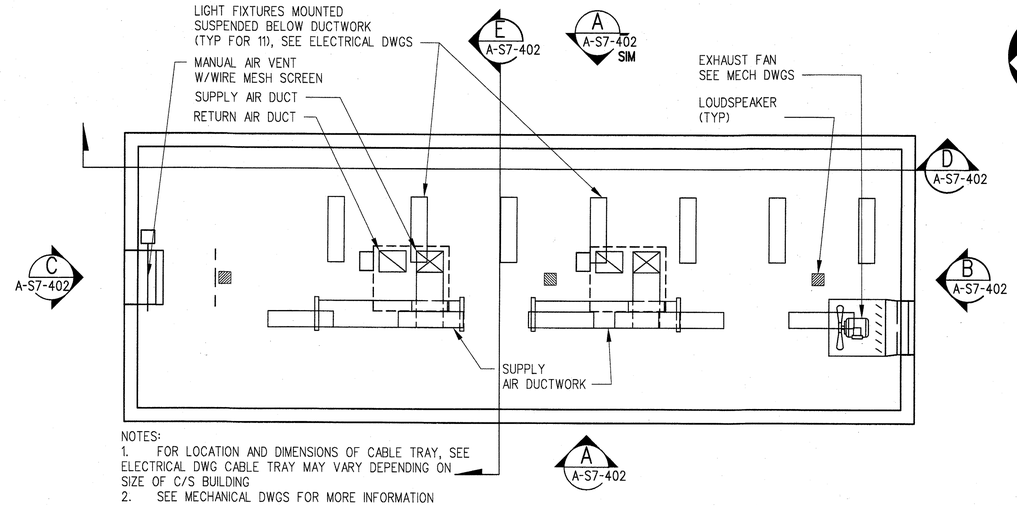

NOTES:
1. FOR LOCATION AND DIMENSIONS OF CABLE TRAY, SEE ELECTRICAL DWG CABLE TRAY MAY VARY DEPENDING ON SIZE OF C/S BUILDING
2. SEE MECHANICAL DWGS FOR MORE INFORMATION

REFLECTED CEILING PLAN

1/4"=1'-0"

1 A-S7-401

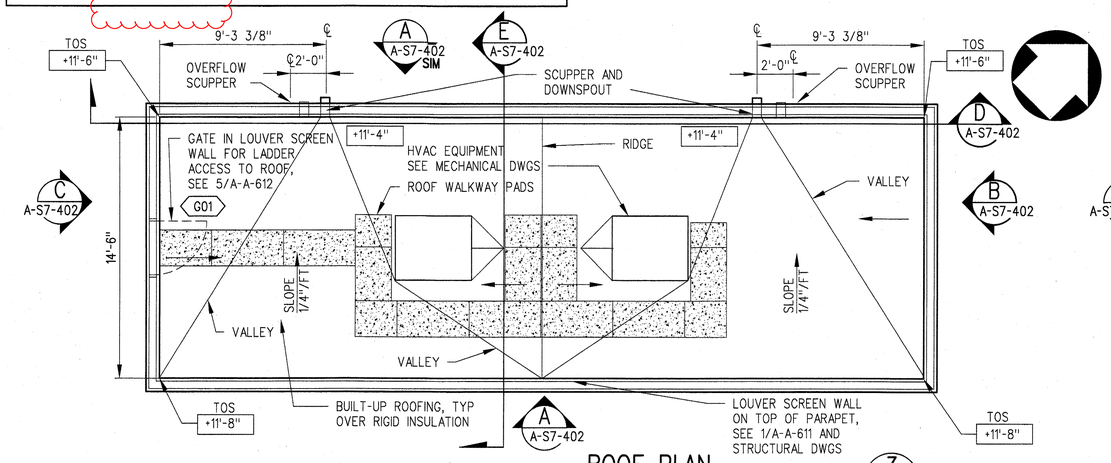

ROOF PLAN

1/4"=1'-0"

3 A-S7-401

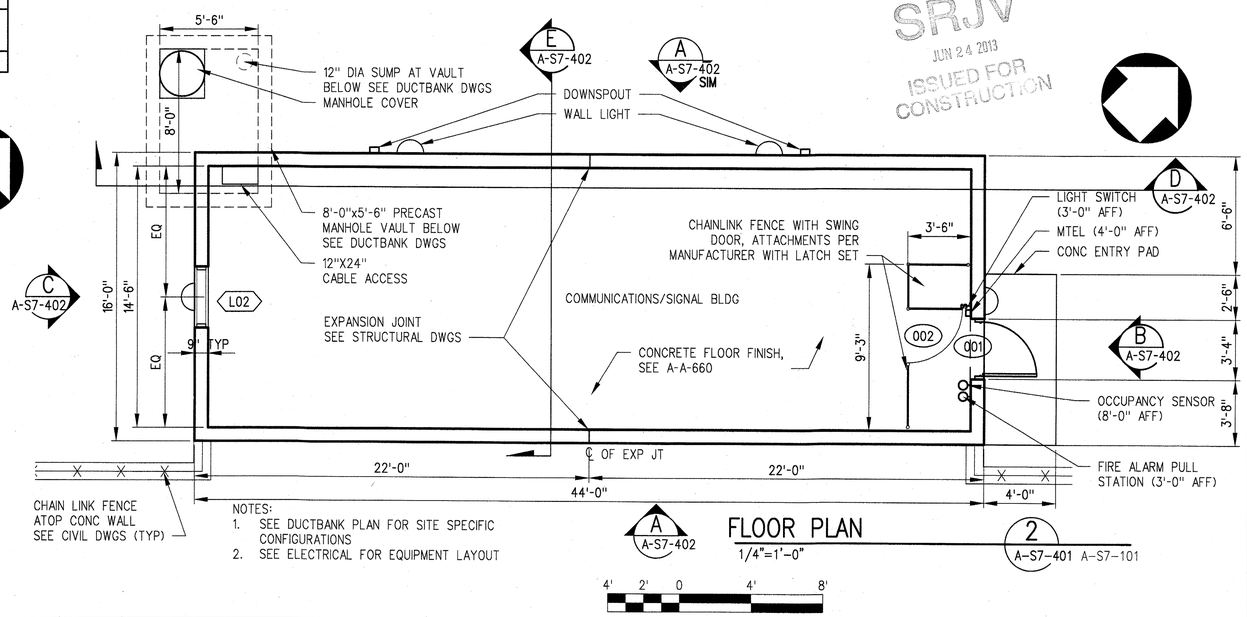

NOTES:
1. SEE DUCTBANK PLAN FOR SITE SPECIFIC CONFIGURATIONS
2. SEE ELECTRICAL FOR EQUIPMENT LAYOUT

FLOOR PLAN

1/4"=1'-0"

2 A-S7-401 A-S7-101

4' 2' 0 4' 8'

SRJV
JUN 24 2013
ISSUED FOR CONSTRUCTION

THE PREPARATION OF THIS DRAWING HAS BEEN FINANCED BY THE TAXES OF THE CITIZENS OF LOS ANGELES COUNTY AND OF THE STATE OF CALIFORNIA.

REV	DATE	BY	APP	REG NO	EXPIRES	SEAL HOLDER	DESCRIPTION
0	5/30/13	CS	JT	C21914	8/31/13	JOHN TRAUTMANN	APPROVED FOR CONSTRUCTION

DESIGNED BY J. JACOBSEN
DRAWN BY M. KHANBABIAN
CHECKED BY C. SUERO
IN CHARGE J. TRAUTMANN
DATE 5/30/13

LICENSED ARCHITECT JOHN P. TRAUTMANN No. C21914 Exp. 08-31-13 ARCHITECTURAL STATE OF CALIFORNIA

Exposition Metro Line Construction Authority
Expo
Exposition Construction Authority Approved for Construction Drawings - AFC
JUN 21 2013

EXPO SKANSKA RADOS
444 South Flower Street
Suite 2200
Los Angeles, CA 90071
TEL (213) 443-7463
FAX (213) 362-9481

PARSONS BRINCKERHOFF

CURRENT STATUS

EXPOSITION LRT PROJECT- PHASE 2
COLORADO/4TH STREET STATION
COMMUNICATIONS/SIGNAL BUILDING
ENLARGED PLANS AND DOOR SCHEDULE

CONTRACT NO XP8902-002
DRAWING NO A-S7-401
REV 0
SCALE AS NOTED
SHEET NO

C:\Users\khanbabian\Desktop\sheet-pop\expo2-A-S7-401.dwg
29-May-13 9:08 AM Khanbabian, Melineh

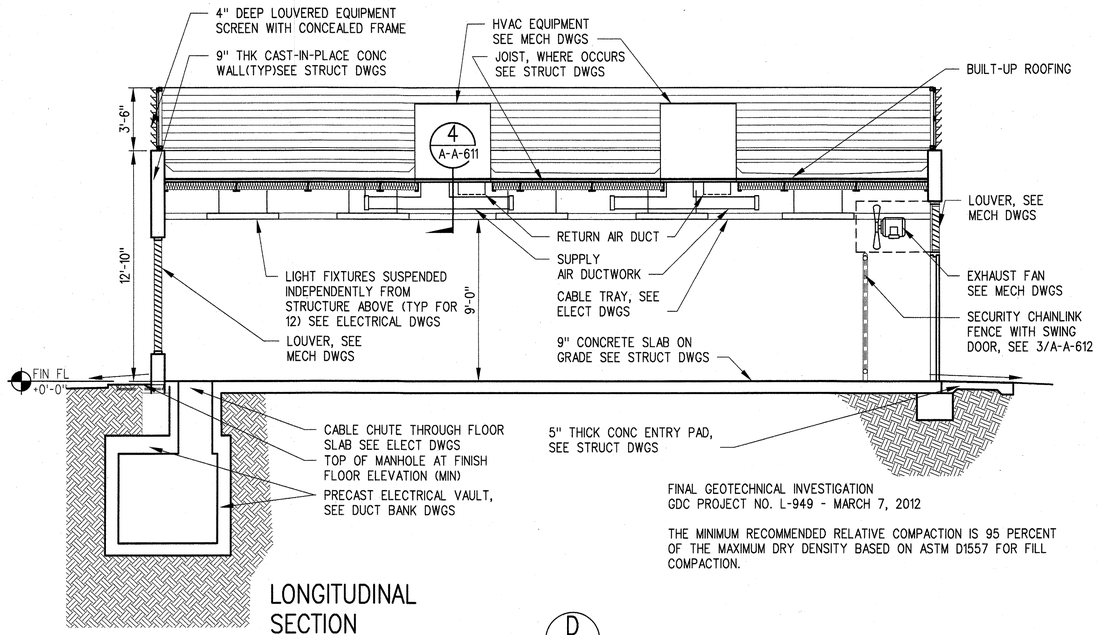

FINAL GEOTECHNICAL INVESTIGATION
GDC PROJECT NO. L-949 - MARCH 7, 2012

THE MINIMUM RECOMMENDED RELATIVE COMPACTION IS 95 PERCENT OF THE MAXIMUM DRY DENSITY BASED ON ASTM D1557 FOR FILL COMPACTION.

LONGITUDINAL SECTION

1/4"=1'-0" — D / A-S7-402 A-S7-401

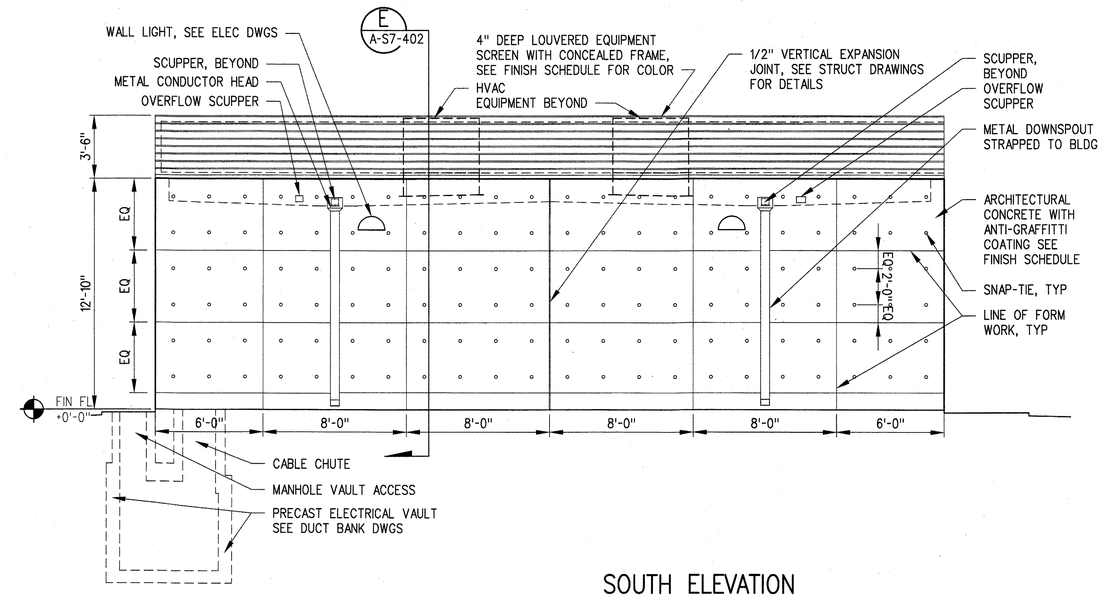

SOUTH ELEVATION NORTH (SIMILAR)

1/4"=1'-0" — A / A-S7-402 A-S7-401

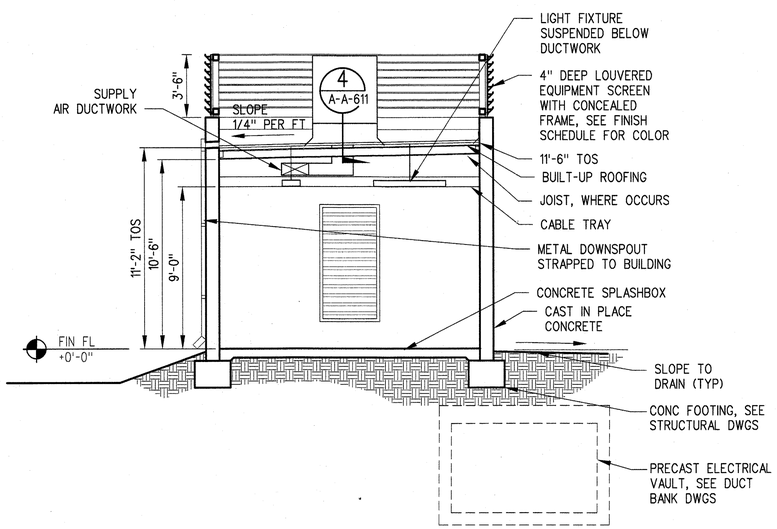

SECTION

1/4"=1'-0" — E / A-S7-402 A-S7-401

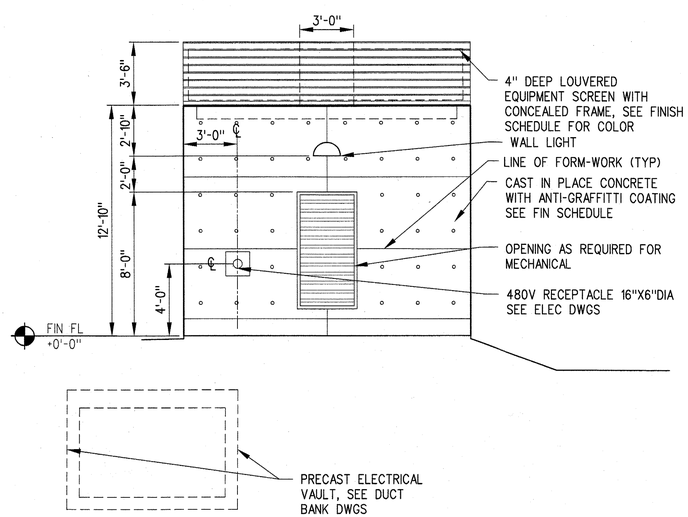

WEST ELEVATION

1/4"=1'-0" — C / A-S7-402 A-S7-401

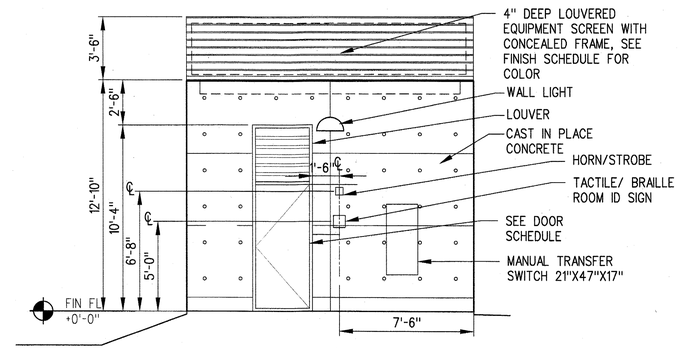

EAST ELEVATION

1/4"=1'-0" — B / A-S7-402 A-S7-401

SRJV
JUN 24 2013
ISSUED FOR CONSTRUCTION

THE PREPARATION OF THIS DRAWING HAS BEEN FINANCED BY THE TAXES OF THE CITIZENS OF LOS ANGELES COUNTY AND OF THE STATE OF CALIFORNIA.

REV	DATE	BY	APP	REG NO	EXPIRES	SEAL HOLDER	DESCRIPTION
0	5/30/13	CS	JT	C21914	8/31/13	JOHN TRAUTMANN	APPROVED FOR CONSTRUCTION

DESIGNED BY J. JACOBSEN
DRAWN BY M. KHANBABIAN
CHECKED BY C. SUERO
IN CHARGE J. TRAUTMANN
DATE 5/30/13

LICENSED ARCHITECT — JOHN P. TRAUTMANN — No. C21914 — Exp. 08-31-13 — ARCHITECTURAL — STATE OF CALIFORNIA

Exposition Metro Line Construction Authority
Expo
Exposition Construction Authority Approved for Construction Drawings - AFC
JUN 21 2013
PARSONS BRINCKERHOFF
CURRENT STATUS

EXPO SKANSKA RADOS
444 South Flower Street
Suite 2200
Los Angeles, CA 90071
TEL (213) 443-7463
FAX (213) 362-9481

EXPOSITION LRT PROJECT- PHASE 2
COLORADO/4TH STREET STATION
COMMUNICATIONS/SIGNAL BUILDING
ELEVATIONS AND SECTIONS

CONTRACT NO XP8902-002
DRAWING NO A-S7-402 REV 0
SCALE 1/4" = 1'-0"
SHEET NO

C:\Users\khanbabiannm\Desktop\sheet-poplexpo2-A-S7-402.dwg
29-May-13 9:08 AM Khanbabian, Melineh

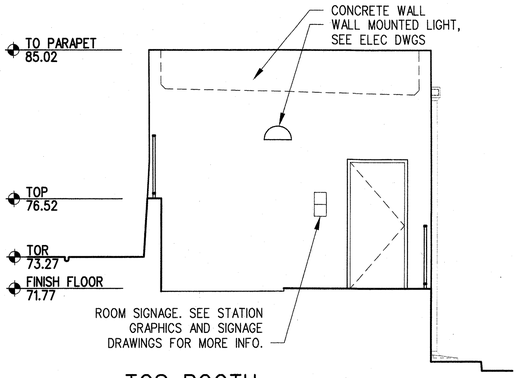

TOS BOOTH
WEST ELEVATION (C / A-S7-411)
1/4"=1'-0"

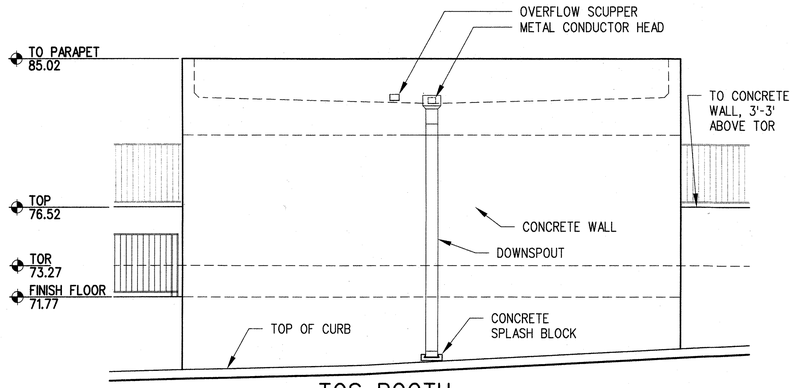

TOS BOOTH
SOUTH ELEVATION (A / A-S7-411)
1/4"=1'-0"

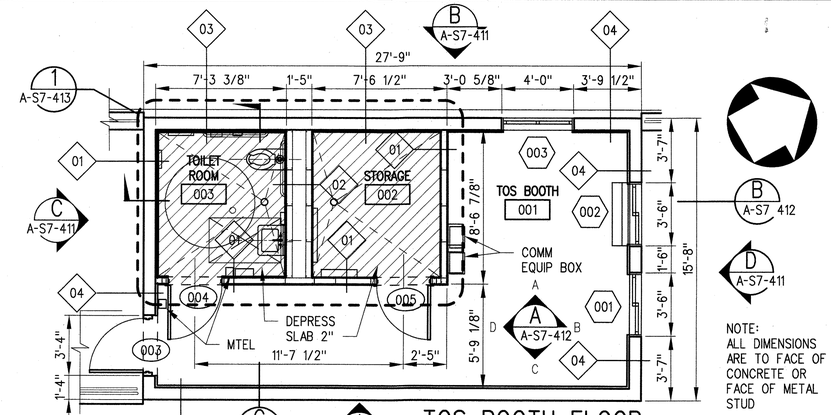

TOS BOOTH FLOOR PLAN (1 / A-S7-411) A-S7-101
1/4"=1'-0"

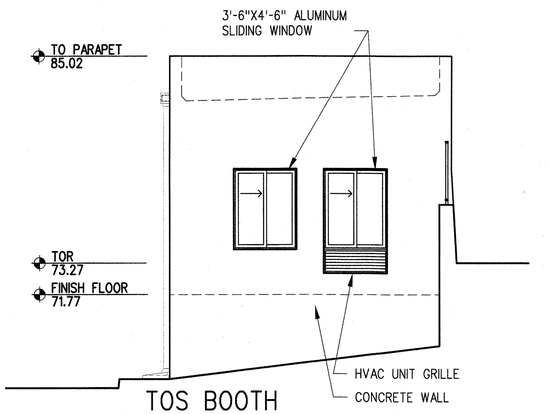

TOS BOOTH
EAST ELEVATION (D / A-S7-411)
1/4"=1'-0"

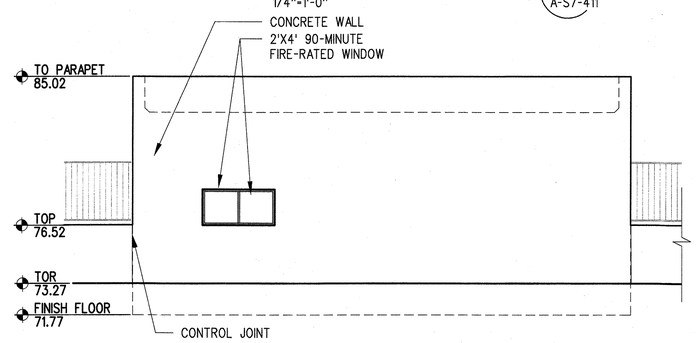

TOS BOOTH
NORTH ELEVATION (B / A-S7-411)
1/4"=1'-0"

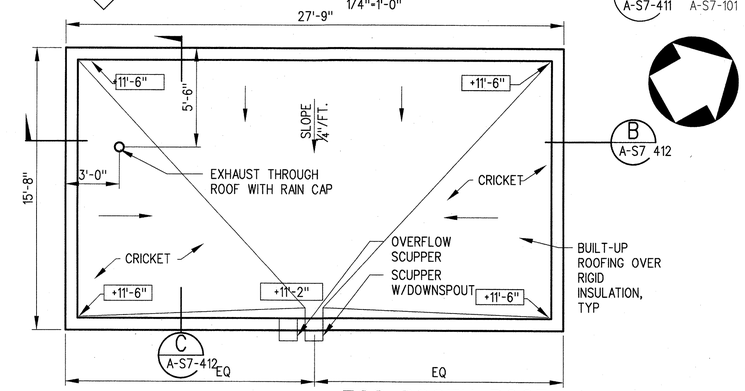

TOS BOOTH ROOF PLAN (2 / A-S7-411)
1/4"=1'-0"

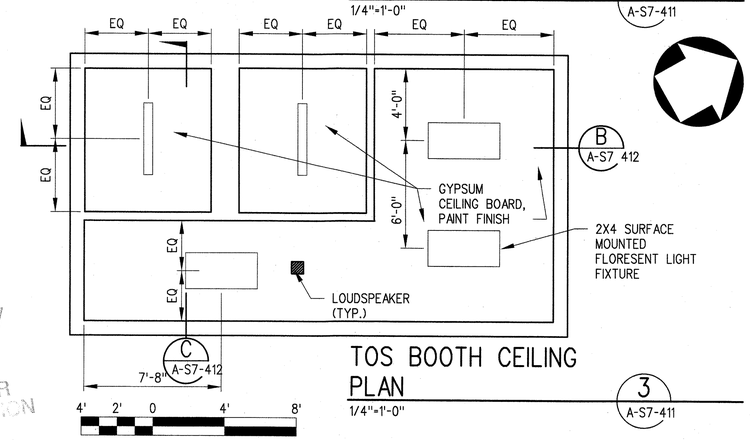

TOS BOOTH CEILING PLAN (3 / A-S7-411)
1/4"=1'-0"

WINDOW SCHEDULE

WINDOW NO.	LOCATION	WINDOW TYPE	SIZE		MATERIAL	DETAILS			SILL HEIGHT	FIRE RATING	REMARKS
			W	H		HEAD	JAMB	SILL			
001	TOS BOOTH	A	3'-6"	4'-6"	ALUM	7/A-S7-414	7/A-S7-414	8/A-S7-414	2'-6"	-	SLIDING ALUM WINDOW
002	TOS BOOTH	A	3'-6"	4'-6"	ALUM	7/A-S7-414	7/A-S7-414	8/A-S7-414	2'-6"	-	SLIDING ALUM WINDOW OVER HVAC UNIT
003	TOS BOOTH	B	4'-0"	2'-0"	HM	1/A-S7-412	1/A-S7-412	2/A-S7-412	5'-0"	90	FIXED HM WINDOW WITH FIRELITE TYPE GLAZING

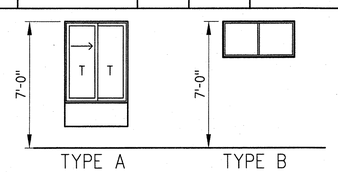

LEGEND

ALUM	ALUMINUM
HM	HOLLOW METAL
T	TEMPERED

NOTES:
1. ALL ALUMINUM WINDOWS DOUBLE GLAZED WITH SOLAR GREY TINT.
2. FOR FIRE-RATED WINDOW, DESIGN BASED ON FIRELITE GLAZING. OTHER MANUFACTUERS ARE ACCEPTABLE.

EXITING ANALYSIS OF TOS BOOTH

OCCUPANT LOAD		4TH STREET/COLORADO STATION		
ROOM NAME	OCCUPANCY CLASSIFICATION	ROOM AREA SQ. FT.	OCCUPANT LOAD FACTOR	NUMBER OF OCCUPANTS
TOS BOOTH	B	230	100	3
TOILET ROOM	B	70	100	1
STORAGE	B	70	100	1

NOTE:

ELECTRICAL CONDUITS AND FIRE SPRINKLER LINES CAN BE RUN THROUGH STRUCTURAL JOISTS. AVOID HAVING EXPOSED PIPING AND CONDUITS.

SRJV
JUN 24 2013
ISSUED FOR CONSTRUCTION

THE PREPARATION OF THIS DRAWING HAS BEEN FINANCED BY THE TAXES OF THE CITIZENS OF LOS ANGELES COUNTY AND OF THE STATE OF CALIFORNIA.

REV	DATE	BY	APP	REG NO	EXPIRES	SEAL HOLDER	DESCRIPTION
0	5/30/13	CS	JT	C21914	8/31/13	JOHN TRAUTMANN	APPROVED FOR CONSTRUCTION

DESIGNED BY J. JACOBSEN
DRAWN BY M. KHANBABIAN
CHECKED BY C. SUERO
IN CHARGE J. TRAUTMANN
DATE 5/30/13

LICENSED ARCHITECT — JOHN P. TRAUTMANN No. C21914 Exp. 08-31-13 ARCHITECTURAL — STATE OF CALIFORNIA

Exposition Metro Line Construction Authority
Expo
Exposition Construction Authority Approved for Construction Drawings - AFC
JUN 21 2013
PARSONS BRINCKERHOFF
CURRENT STATUS

EXPO SKANSKA RADOS
444 South Flower Street
Suite 2200
Los Angeles, CA 90071
TEL (213) 443-7463
FAX (213) 362-9481

EXPOSITION LRT PROJECT- PHASE 2
COLORADO/4TH STREET STATION
TOS BOOTH
PLANS, SECTIONS, ELEVATIONS AND WINDOW SCHEDULE

CONTRACT NO XP8902-002
DRAWING NO A-S7-411 REV 0
SCALE 1/4" = 1'-0"
SHEET NO

C:\Users\khanbabiamm\Desktop\sheet-poplexpo2-A-S7-411.dwg
29-May-13 9:09 AM Khanbabian, Melineh

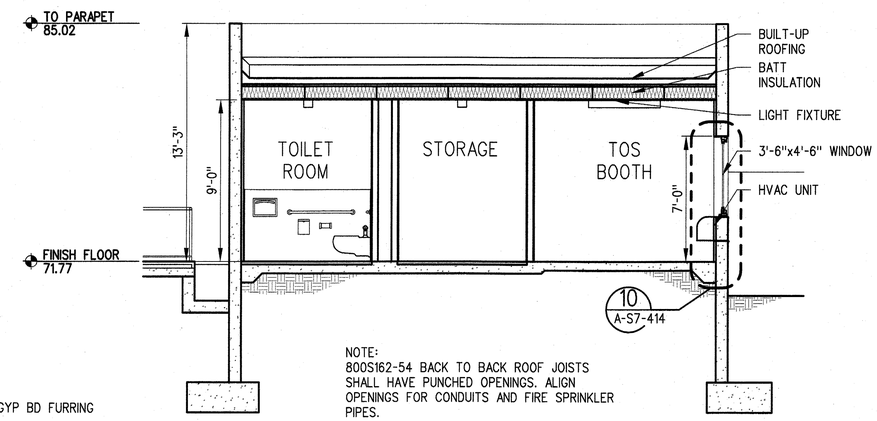

NOTE:
800S162-54 BACK TO BACK ROOF JOISTS SHALL HAVE PUNCHED OPENINGS. ALIGN OPENINGS FOR CONDUITS AND FIRE SPRINKLER PIPES.

TOS BOOTH SECTION (B / A-S7-412)

1/4"=1'-0"

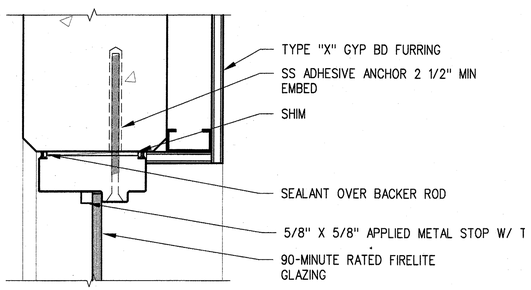

WINDOW HEAD/JAMB DET (1 / A-S7-412)

3"=1'-0"

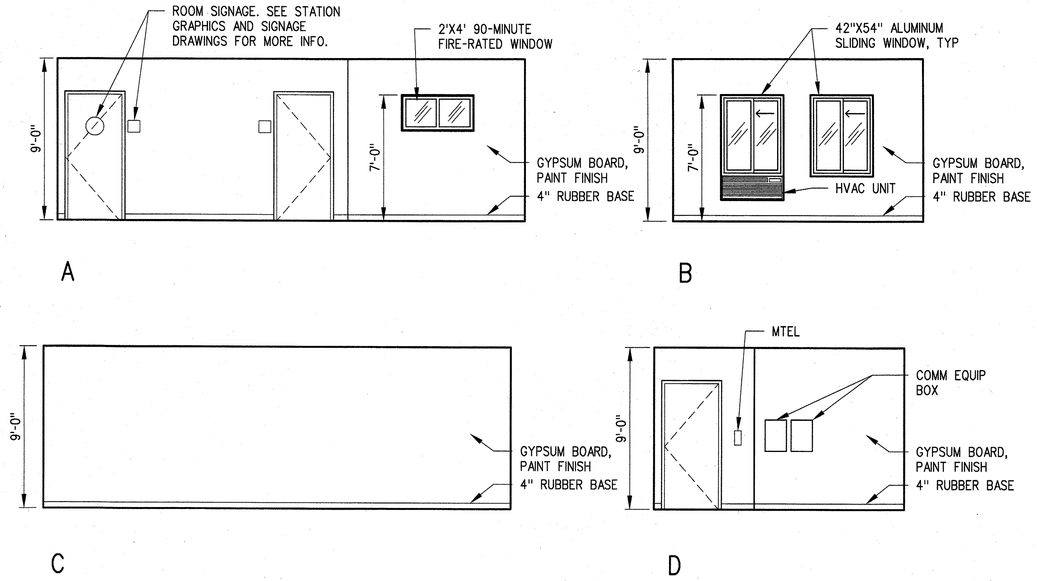

TOS BOOTH INTERIOR ELEVATIONS (A / A-S7-412 A-S7-411)

1/4"=1'-0"

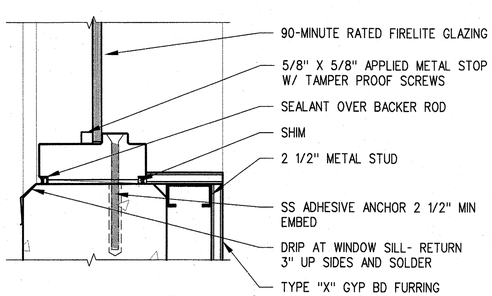

WINDOW SILL DETAIL (2 / A-S7-412)

3"=1'-0"

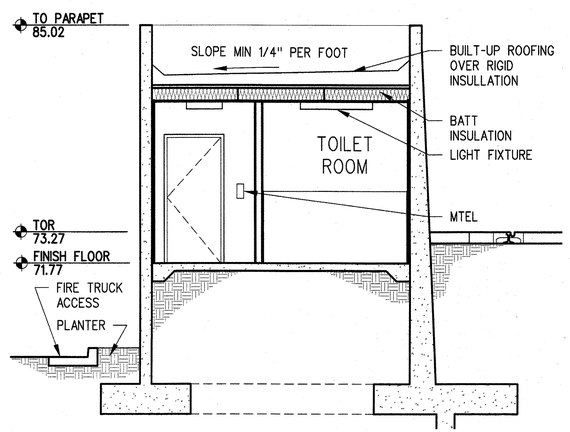

TOS BOOTH SECTION (C / A-S7-412 A-S7-411)

1/4"=1'-0"

ROOM FINISH SCHEDULE

ROOM NO.	ROOM NAME	FLOOR FINISH	NORTH			EAST			WEST			SOUTH			CEILING FINISH	REMARKS
			MATERIAL	FINISH	BASE	MATERIAL	FINISH	BASE	MATERIAL	FINISH	BASE	MATERIAL	FINISH	BASE		
001	TOS BOOTH	VCT-1	GB	P-1	RB-1	GB	P-1	RB-1	GB	P-1	RB-1	GB	P-1	RB-1	GB	
002	STORAGE	CT-2	GB	P-1	CT-3	GB	P-1	CT-3	GB	P-1	CT-3	GB	P-1	CT-3	GB	
003	TOILET ROOM	CT-2	CB	CT-1	CT-3	CB	CT-1	CT-3	CB	CT-1	CT-3	CB	CT-1	CT-3	MG	

MATERIALS ABBREVIATIONS

CB CEMENTITIOUS BOARD
GB GYPSUM BOARD
MG MOISTURE RESISTANT GYPSUM BOARD

ROOM FINISH NOTES

1. ALL INTERIOR FINISHES SHALL COMPLY WITH CBC 2010

FINISHES

PAINT
P-1 (INTERIOR WALL)- WHITE

VINYL COMPOSITE TILE
VCT-1 ARMSTRONG, STANDARD EXCELON IMPERIAL TEXTURE, 51903 BLUE GRAY

RUBBER BASE
RB-1 RUBBER BASE

CERAMIC TILE
CT-1 4x4 CERAMIC TILE
CT-2 2x2 CERAMIC TILE
CT-3 4x4 CERAMIC BASE

4' 2' 0 4' 8'

SRJV
JUN 24 2013
ISSUED FOR CONSTRUCTION

THE PREPARATION OF THIS DRAWING HAS BEEN FINANCED BY THE TAXES OF THE CITIZENS OF LOS ANGELES COUNTY AND OF THE STATE OF CALIFORNIA.

REV	DATE	BY	APP	REG NO	EXPIRES	SEAL HOLDER	DESCRIPTION
0	5/30/13	CS	JT	C21914	8/31/13	JOHN TRAUTMANN	APPROVED FOR CONSTRUCTION

DESIGNED BY J. JACOBSEN
DRAWN BY M. KHANBABIAN
CHECKED BY C. SUERO
IN CHARGE J. TRAUTMANN
DATE 5/30/13

LICENSED ARCHITECT JOHN P. TRAUTMANN No. C21914 Exp. 08-31-13 ARCHITECTURAL STATE OF CALIFORNIA

Exposition Metro Line Construction Authority
Expo
Exposition Construction Authority Approved for Construction Drawings - AFC
JUN 21 2013
PARSONS BRINCKERHOFF
CURRENT STATUS

EXPO SKANSKA RADOS
444 South Flower Street
Suite 2200
Los Angeles, CA 90071
TEL (213) 443-7463
FAX (213) 362-9481

EXPOSITION LRT PROJECT- PHASE 2
COLORADO/4TH STREET STATION
TOS BOOTH
INTERIOR ELEVATIONS AND SECTIONS

CONTRACT NO XP8902-002
DRAWING NO A-S7-412
REV 0
SCALE 1/2" = 1'-0"
SHEET NO

C:\projectwise\pb\projectwise\mf\khanbabiam\dms11025\expo2-A-S7-412.dwg
29-May-13 11:09 AM Khanbabian, Melineh

C:\Users\khanbabianm\Desktop\sheet-poptexpo2\A-S7-413.dwg

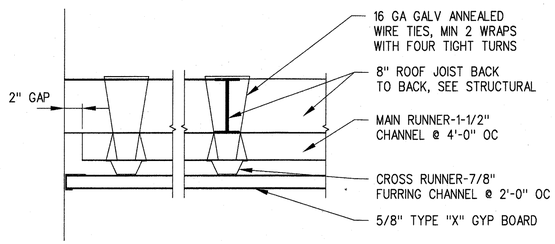

THRESHOLD DETAIL 3 / A-S7-413

3"=1'-0"

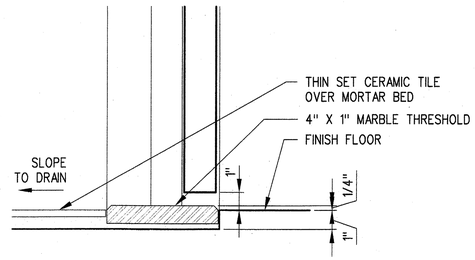

THRESHOLD DETAIL 2 / A-S7-413

3"=1'-0"

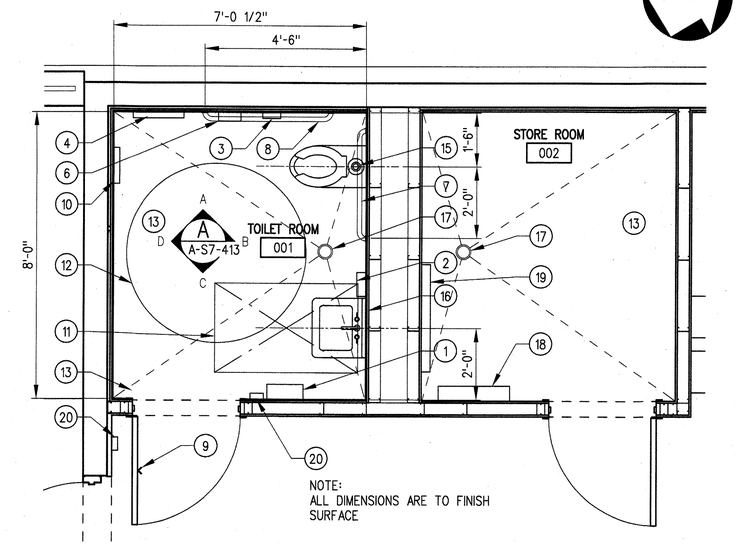

ENLARGED TOILET ROOM PLAN 1 / A-S7-413

1/2"=1'-0"

KEYNOTES:

1. PAPER TOWEL DISPENSER AND WASTE RECEPTACLE
2. SOAP DISPENSER
3. TOILET TISSUE DISPENSER
4. TOILET SEAT COVER DISPENSER
5. 24"X30" FRAMED MIRROR WITH INTEGRAL SHELF
6. SANITARY NAPKIN DISPOSAL
7. 36" GRAB BAR WITH BACKING PLATE, SEE 2/A-A-S7-415
8. 42" GRAB BAR WITH BACKING PLATE, SEE 2/A-A-S7-415
9. COAT HOOK MOUNTED 48" AFF
10. SANITARY NAPKIN DISPENSER
11. 30"X48" ADA CLEAR FLOOR SPACE
12. 60" DIAMETER ADA CLEAR FLOOR SPACE
13. 2"X2" INTEGRAL COLOR CERAMIC FLOOR TILE OVER SETTING BED, SLOPE TO DRAIN
14. THIN-SET 4X4 CERAMIC TILE WAINSCOT WITH EPOXY GROUT OVER 5/8" CEMENT BD W/ BULLNOSE AT TOP COURSE
15. WALL MOUNTED WATER CLOSET W/FLUSH ACTIVATOR ON WIDE SIDE
16. WALL MOUNTED LAVATORY W/INSULATED DRAIN LINE
17. FLOOR DRAIN, SEE PLUMBING DWGS
18. STAINLESS STEEL SHELF
19. STAINLESS STEEL MOP AND BROOM HOLDER
20. MTEL

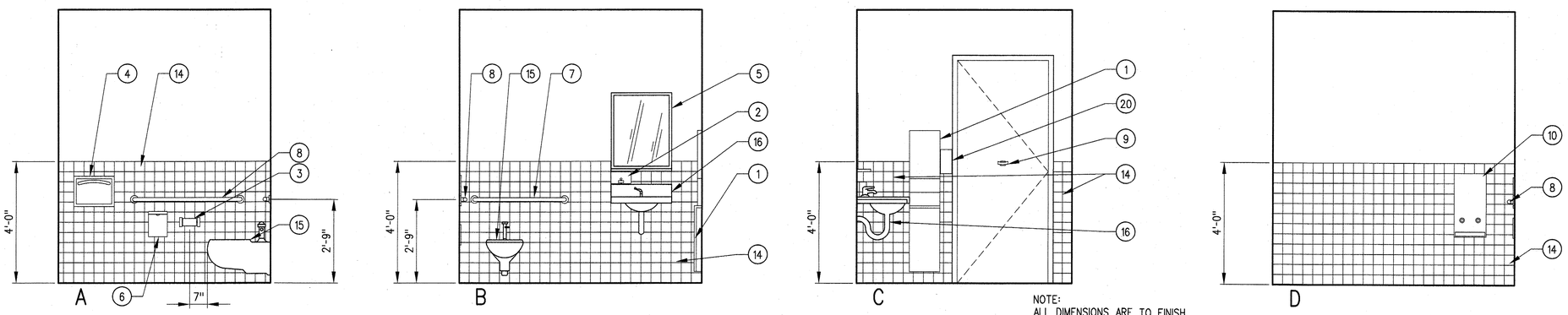

TOILET ROOM INTERIOR ELEVATIONS A / A-S7-413

1/2"=1'-0"

STOP
JUN 24 2013
ISSUED FOR CONSTRUCTION

THE PREPARATION OF THIS DRAWING HAS BEEN FINANCED BY THE TAXES OF THE CITIZENS OF LOS ANGELES COUNTY AND OF THE STATE OF CALIFORNIA.

REV	DATE	BY	APP	REG NO	EXPIRES	SEAL HOLDER	DESCRIPTION
0	5/30/13	CS	JT	C21914	8/31/13	JOHN TRAUTMANN	APPROVED FOR CONSTRUCTION

DESIGNED BY J. JACOBSEN
DRAWN BY M. KHANBABIAN
CHECKED BY C. SUERO
IN CHARGE J. TRAUTMANN
DATE 5/30/13

LICENSED ARCHITECT JOHN P. TRAUTMANN No. C21914 Exp. 08-31-13 ARCHITECTURAL STATE OF CALIFORNIA

Exposition Metro Line Construction Authority
Expo

Exposition Construction Authority Approved for Construction Drawings - AFC

EXPO SKANSKA RADOS

444 South Flower Street
Suite 2200
Los Angeles, CA 90071
TEL (213) 443-7463
FAX (213) 362-9481

PARSONS BRINCKERHOFF

JUN 21 2013

CURRENT STATUS

EXPOSITION LRT PROJECT- PHASE 2
COLORADO/4TH STREET STATION
TOS BOOTH ENLARGED
TOILET ROOM PLAN AND
INTERIOR ELEVATIONS

CONTRACT NO XP8902-002
DRAWING NO A-S7-413
REV 0
SCALE 1/2" = 1'-0"
SHEET NO

Khanbabian, Melinah 9:09 AM 29-May-13

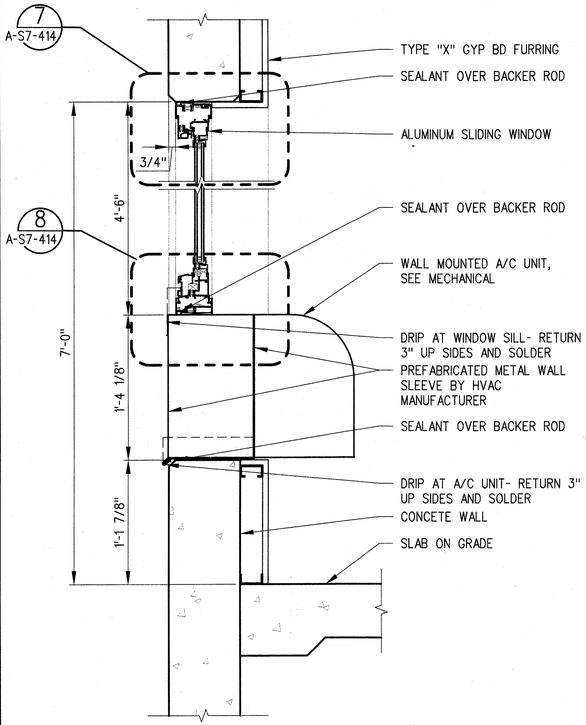

WALL SECTION AT WINDOW/HVAC (10 / A-S7-414)
1 1/2"=1'-0"

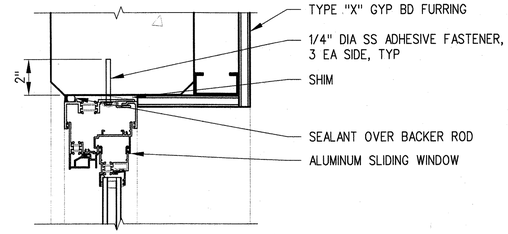

WINDOW HEAD/JAMB DET (7 / A-S7-414)
3"=1'-0"

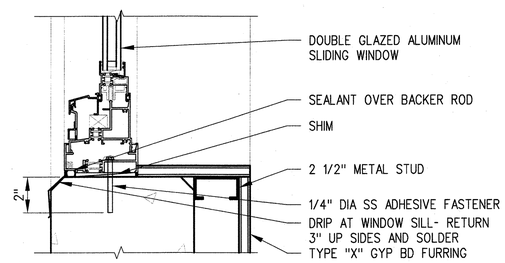

WINDOW SILL DETAIL (8 / A-S7-414)
3"=1'-0"

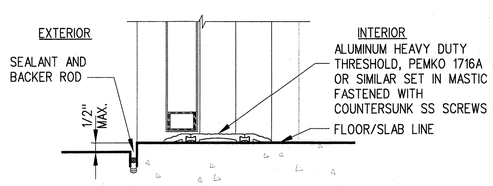

DOOR THRESHOLD DET (9 / A-S7-414)
3"=1'-0"

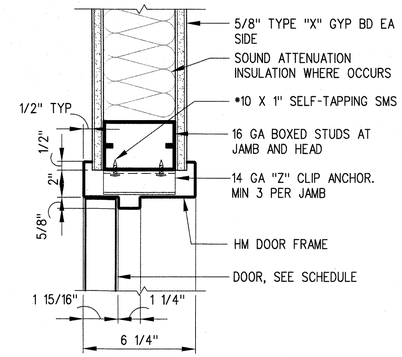

DOOR HEAD/JAMB DET (4 / A-S7-414)
3"=1'-0"

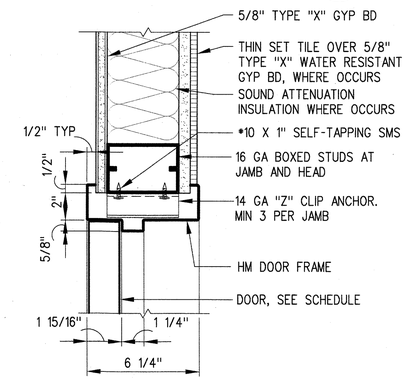

DOOR HEAD/JAMB DET (5 / A-S7-414)
3"=1'-0"

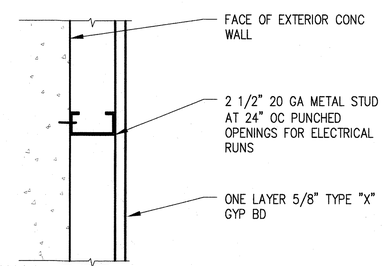

WALL TYPE 4
3 1/8"GYP BD FURRING (6 / A-S7-414)
3"=1'-0"

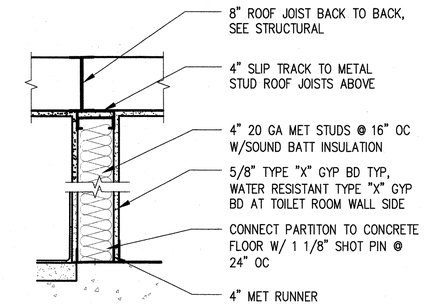

WALL TYPE 1:
4" MTL STUD PARTITION (1 / A-S7-414)
1 1/2"=1'-0"

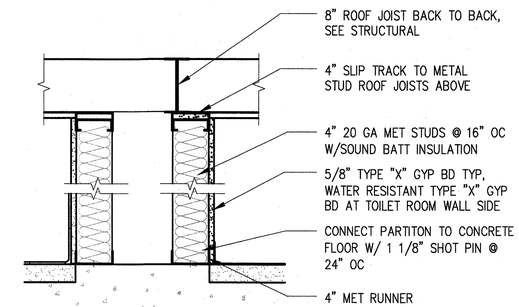

WALL TYPE 2:
PLUMBING PARTITION (2 / A-S7-414)
1 1/2"=1'-0"

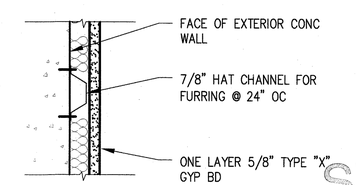

SECTION
WALL TYPE 3
1 1/2"GYP BD FURRING (3 / A-S7-414)
3"=1'-0"

SRJV
JUN 24 2013
ISSUED FOR CONSTRUCTION

THE PREPARATION OF THIS DRAWING HAS BEEN FINANCED BY THE TAXES OF THE CITIZENS OF LOS ANGELES COUNTY AND OF THE STATE OF CALIFORNIA.

REV	DATE	BY	APP	REG NO	EXPIRES	SEAL HOLDER	DESCRIPTION
0	5/30/13	CS	JT	C21914	8/31/13	JOHN TRAUTMANN	APPROVED FOR CONSTRUCTION

DESIGNED BY J. JACOBSEN
DRAWN BY M. KHANBABIAN
CHECKED BY C. SUERO
IN CHARGE J. TRAUTMANN
DATE 5/30/13

LICENSED ARCHITECT JOHN P. TRAUTMANN No. C21914 Exp. 08-31-13 ARCHITECTURAL STATE OF CALIFORNIA

Exposition Metro Line Construction Authority
Expo
Exposition Construction Authority Approved for Construction Drawings - AFC
JUN 21 2013
EXPO SKANSKA RADOS
444 South Flower Street
Suite 2200
Los Angeles, CA 90071
TEL (213) 443-7463
FAX (213) 362-9481
PARSONS BRINCKERHOFF
CURRENT STATUS

EXPOSITION LRT PROJECT- PHASE 2
COLORADO/4TH STREET STATION
TOS BOOTH
DETAILS

CONTRACT NO XP8902-002
DRAWING NO A-S7-414
REV 0
SCALE 1 1/2" = 1'-0"
SHEET NO

C:\Users\khanbabiamm\Desktop\sheet-pop\expo2-A-S7-414.dwg
23-May-13 9:09 AM Khanbabian, Melineh

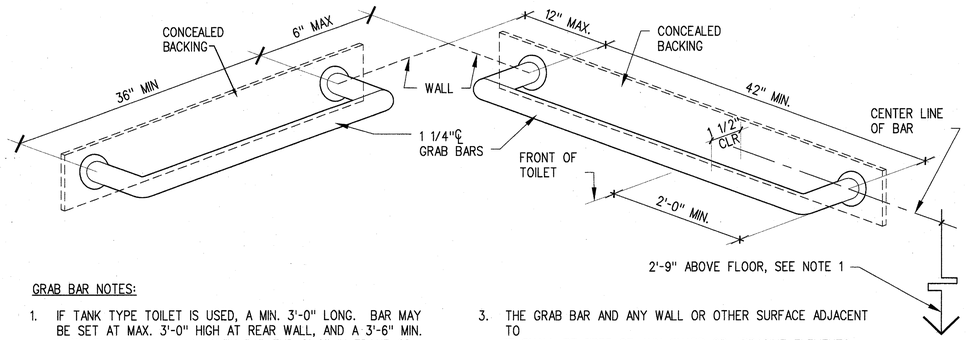

GRAB BAR NOTES:

1. IF TANK TYPE TOILET IS USED, A MIN. 3'-0" LONG. BAR MAY BE SET AT MAX. 3'-0" HIGH AT REAR WALL, AND A 3'-6" MIN. LONG SIDE AT 2'-9" HIGH WITH BAR END 2'-0" IN FRONT OF TOILET.
2. DIMENSIONS INDICATED ABOVE, EXCEPT (2'-9" ABOVE FLOOR), ARE TYPICAL AND ARE SUBJECT TO VERIFICATION WITH EACH GRAB BAR MANUFACTURER PRIOR TO INSTALLATION.
3. THE GRAB BAR AND ANY WALL OR OTHER SURFACE ADJACENT TO IT SHALL BE FREE OF ANY SHARP OR ABRASIVE ELEMENTS. EDGES SHALL HAVE A MIN. RADIUS OF 1/8".
4. SEE 2/A-S7-415 FOR BACKING PLATE INFORMATION.

GRAB BAR DIMENSIONS (5 / A-S7-415)

NOT TO SCALE

X=52" MINIMUM WHEN WATER CLOSETS ARE IN STALLS
X=54" MINIMUM WHEN WATER CLOSETS ARE NOT IN STALLS
(SUCH AS IN SINGLE ACCOMMODATION ROOMS OR OPEN TOILETING SITUATIONS)

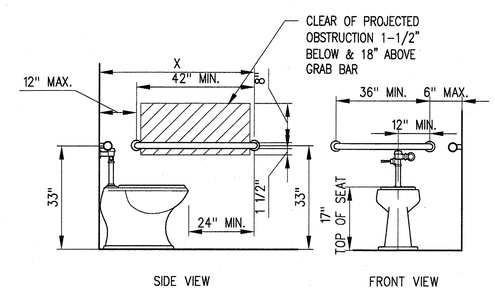

FLOOR MOUNTED WATER CLOSET (3 / A-S7-415)

NOT TO SCALE

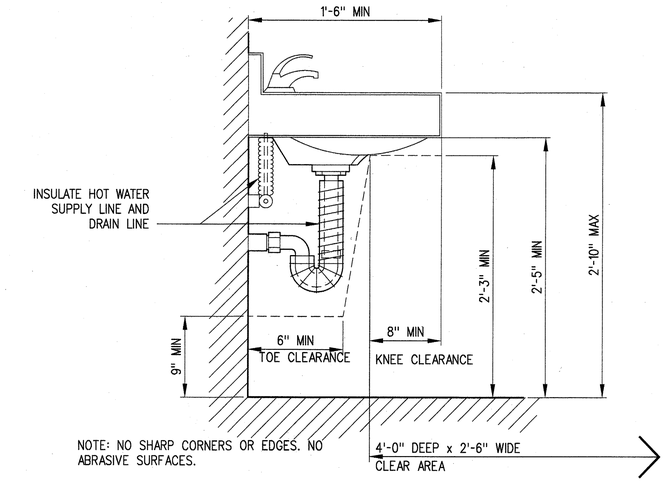

LAVATORY (1 / A-S7-415)

NOT TO SCALE

GENERAL NOTE:

1. PRIOR TO FRAMING OPENINGS OR INSTALLING BACKING, ETC. AS MAY BE REQUIRED, CONTRACTOR TO VERIFY ALL MOUNTING HEIGHTS WITH TOILET ACCESSORY SUPPLIER AS REQUIREMENTS MAY VARY DEPENDING UPON MANUFACTURER.

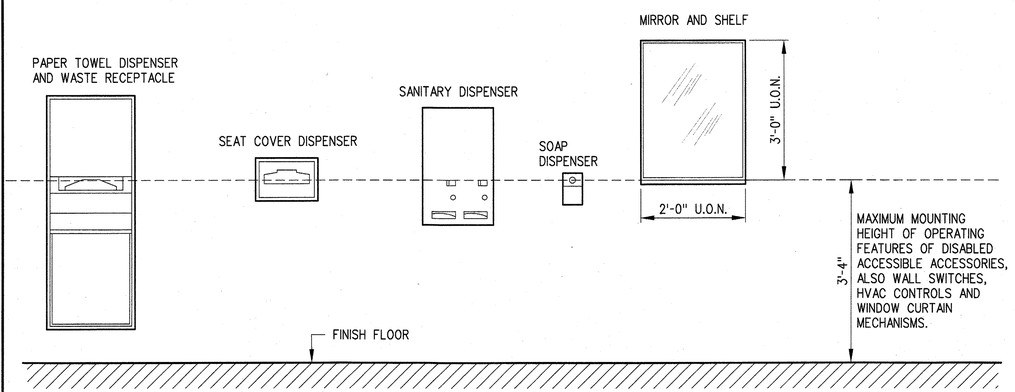

TOILET ROOM ACCESSORIES (6 / A-S7-415)

NOT TO SCALE

NOTE:
IF TANK TYPE WATER CLOSET IS USED, WIDE SIDE OF TOILET SPACE SHALL BE ON HANDLE SIDE

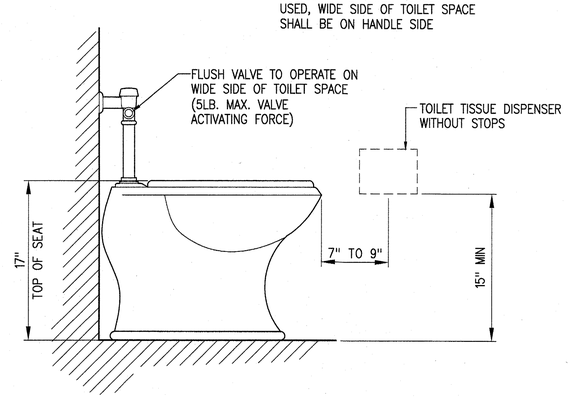

WATER CLOSET (4 / A-S7-415)

NOT TO SCALE

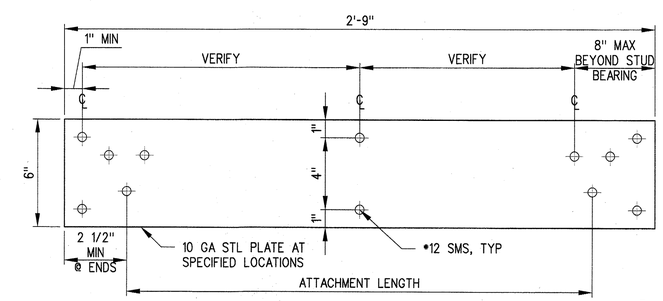

SRJV
JUN 24 2013
ISSUED FOR CONSTRUCTION

BACKING PLATE (2 / A-S7-415)

NOT TO SCALE

THE PREPARATION OF THIS DRAWING HAS BEEN FINANCED BY THE TAXES OF THE CITIZENS OF LOS ANGELES COUNTY AND OF THE STATE OF CALIFORNIA.

REV	DATE	BY	APP	REG NO	EXPIRES	SEAL HOLDER	DESCRIPTION
0	5/30/13	CS	JT	C21914	8/31/13	JOHN TRAUTMANN	APPROVED FOR CONSTRUCTION

DESIGNED BY J. JACOBSEN
DRAWN BY M. KHANBABIAN
CHECKED BY C. SUERO
IN CHARGE J. TRAUTMANN
DATE 5/30/13

LICENSED ARCHITECT JOHN P. TRAUTMANN No. C21914 Exp. 08-31-13 ARCHITECTURAL STATE OF CALIFORNIA

Exposition Metro Line Construction Authority
Expo
Exposition Construction Authority
Approved for Construction
Drawings - AFC

EXPO SKANSKA RADOS
444 South Flower Street
Suite 2200
Los Angeles, CA 90071
TEL (213) 443-7463
FAX (213) 362-9481

PARSONS BRINCKERHOFF
JUN 21 2013
CURRENT STATUS

EXPOSITION LRT PROJECT- PHASE 2
COLORADO/4TH STREET STATION
TOS BOOTH
ACCESSIBLE DETAILS

CONTRACT NO XP8902-002
DRAWING NO A-S7-415
REV 0
SCALE AS NOTED
SHEET NO

C:\Users\khanbabiam\Desktop\sheet-pop\expo2-A-S7-415.dwg
29-May-13 9:09 AM Khanbabian, Melineh

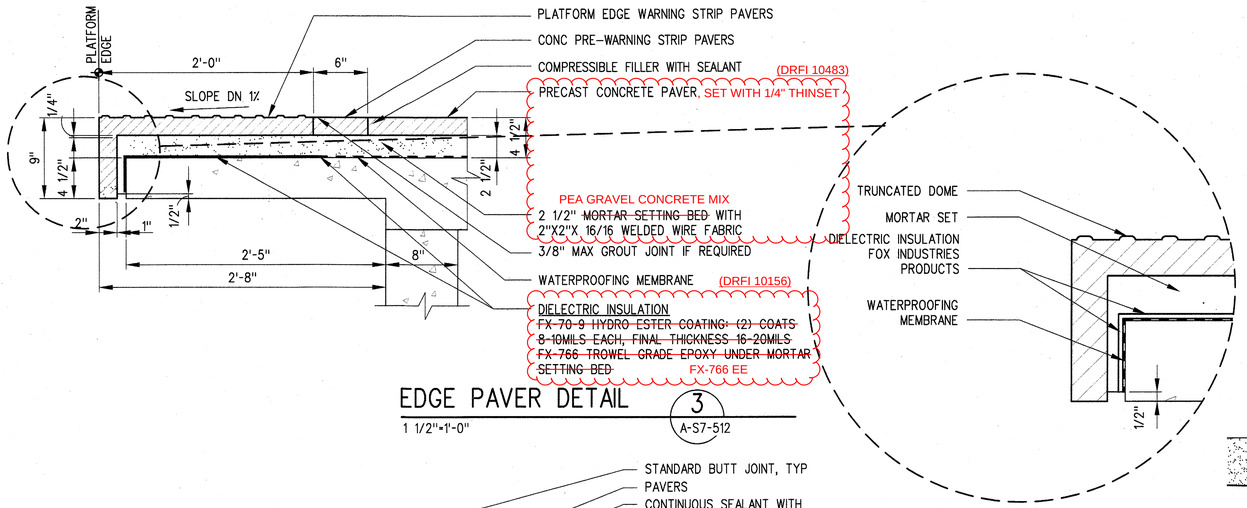

EDGE PAVER DETAIL 3 A-S7-512

1 1/2"=1'-0"

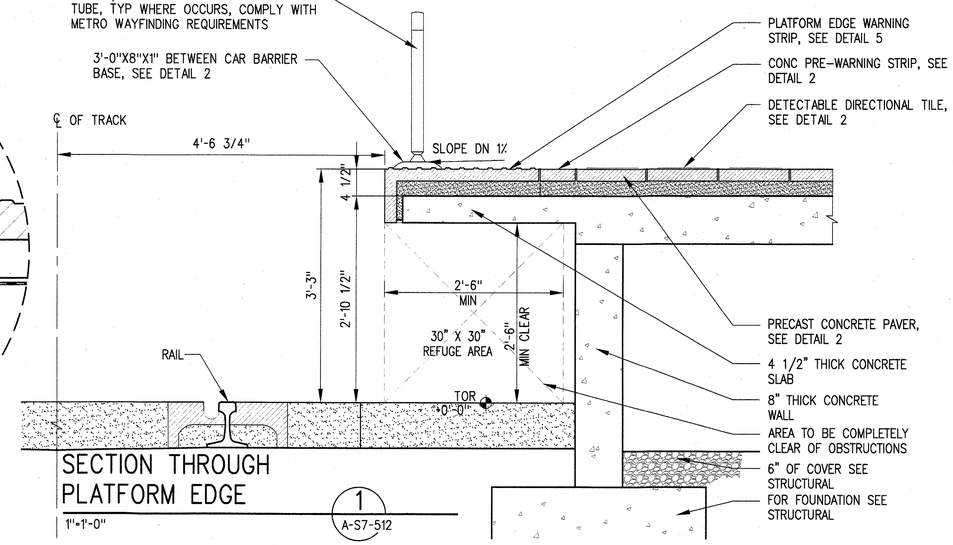

SECTION THROUGH PLATFORM EDGE 1 A-S7-512

1"=1'-0"

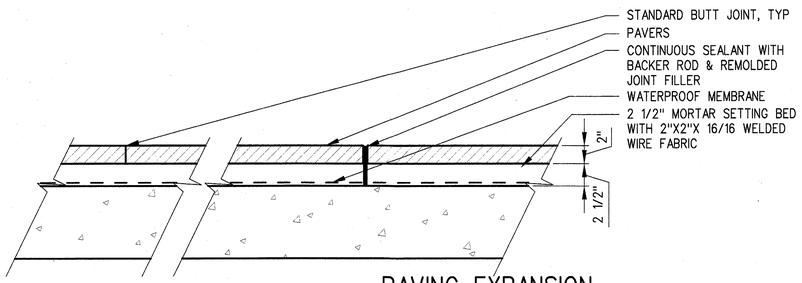

PAVING EXPANSION JOINT 4 A-S7-512

1 1/2"=1'-0"

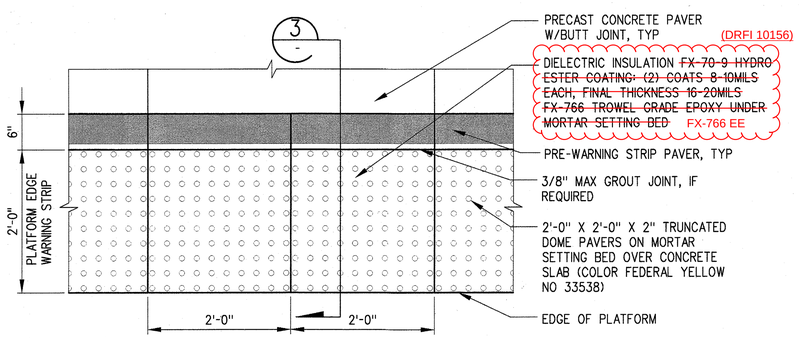

EDGE PAVER PLAN 5 A-S7-512

1"=1'-0"

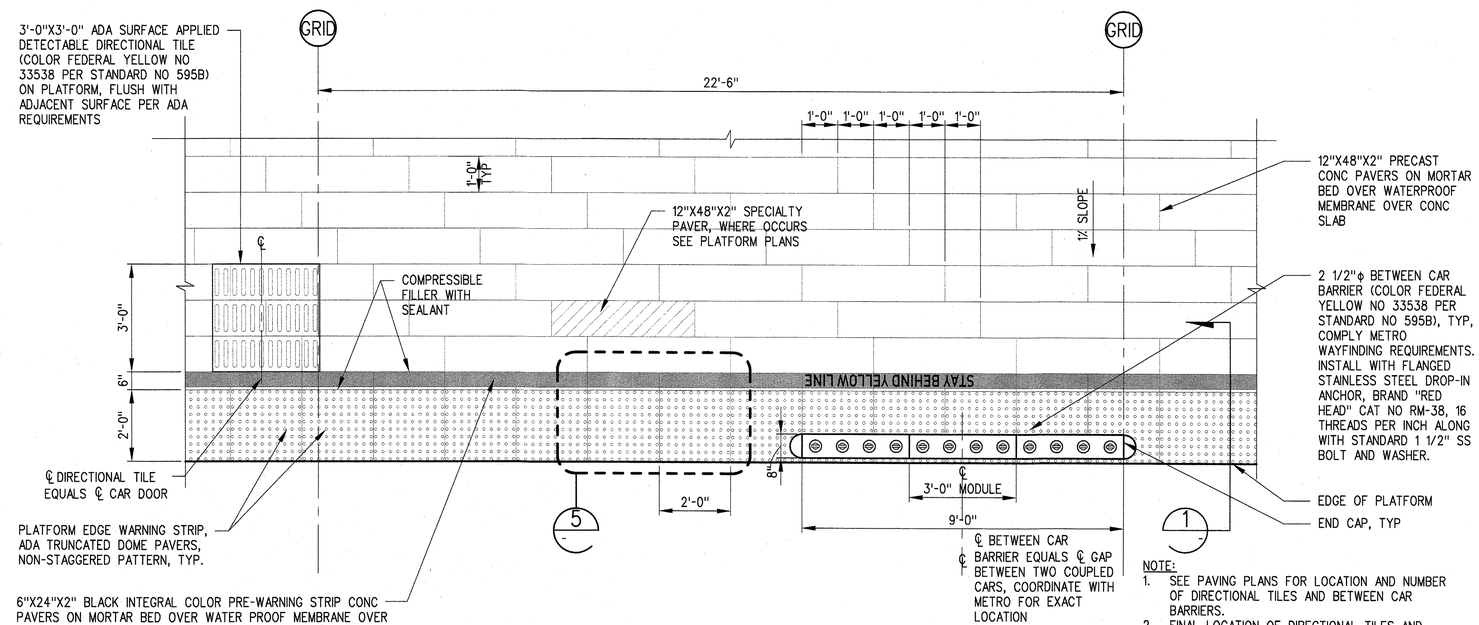

NOTE:
1. SEE PAVING PLANS FOR LOCATION AND NUMBER OF DIRECTIONAL TILES AND BETWEEN CAR BARRIERS.
2. FINAL LOCATION OF DIRECTIONAL TILES AND BETWEEN CAR BARRIERS PER METRO

PLATFORM PAVING DETAIL 2 A-S7-512

1/2"=1'-0"

SRJV
JUN 24 2013
ISSUED FOR CONSTRUCTION

THE PREPARATION OF THIS DRAWING HAS BEEN FINANCED BY THE TAXES OF THE CITIZENS OF LOS ANGELES COUNTY AND OF THE STATE OF CALIFORNIA.

REV	DATE	BY	APP	REG NO	EXPIRES	SEAL HOLDER	DESCRIPTION
0	5/30/13	CS	JT	C21914	8/31/13	JOHN TRAUTMANN	APPROVED FOR CONSTRUCTION

DESIGNED BY J. JACOBSEN
DRAWN BY M. KHANBABIAN
CHECKED BY C. SUERO
IN CHARGE J. TRAUTMANN
DATE 5/30/13

LICENSED ARCHITECT JOHN P. TRAUTMANN No. C21914 Exp. 08-31-13 ARCHITECTURAL STATE OF CALIFORNIA

Exposition Metro Line Construction Authority
Expo
Exposition Construction Authority Approved for Construction Drawings - AFC
JUN 21 2013

EXPO SKANSKA RADOS
444 South Flower Street
Suite 2200
Los Angeles, CA 90071
TEL (213) 443-7463
FAX (213) 362-9481

PARSONS BRINCKERHOFF

CURRENT STATUS

EXPOSITION LRT PROJECT- PHASE 2
COLORADO/4TH STREET STATION
PLATFORM PAVER DETAILS

CONTRACT NO XP8902-002
DRAWING NO A-S7-512
REV 0
SCALE AS NOTED
SHEET NO

C:\Users\khanbabiamm\Desktop\steel-poplexpo2-A-S7-512.dwg
29-May-13 9:09 AM Khanbabian, Melineh

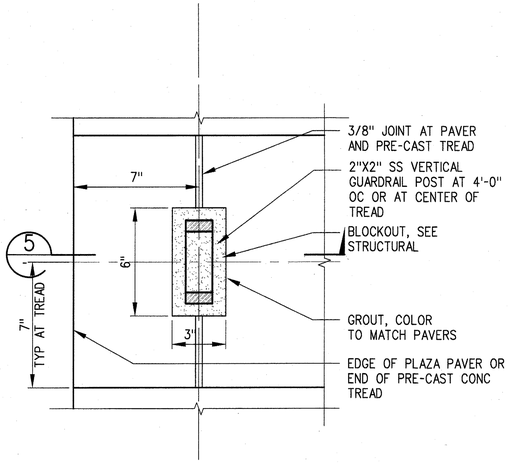

PLAN DETAIL AT TREAD (6) A-S7-513 A-S7-133
3"=1'-0"

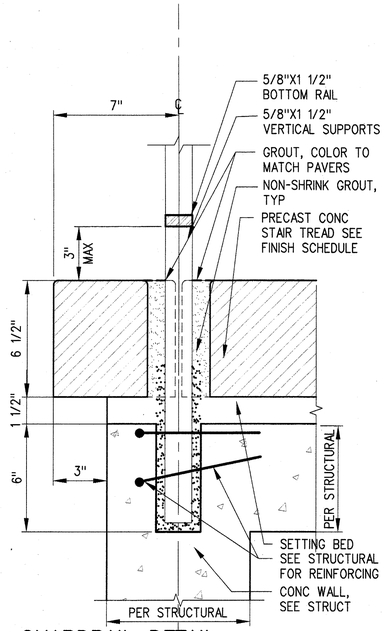

GUARDRAIL DETAIL AT TREAD (5) A-S7-513 A-S7-133
3"=1'-0"

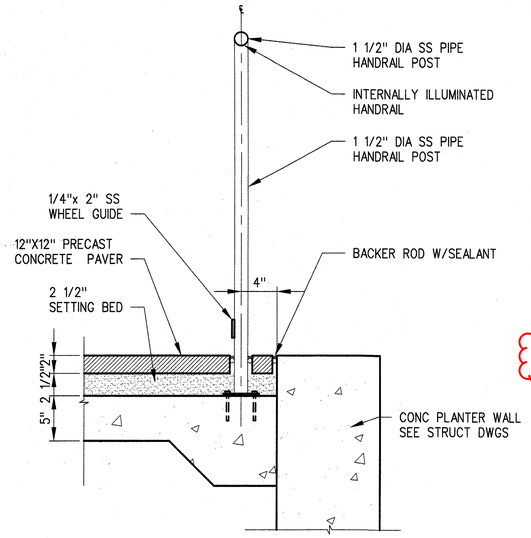

EDGE OF PLANTER DETAIL (3) A-S7-513 A-S7-133
1 1/2"=1'-0"

NOTES:

1. ALL STATION FENCE AND GUARDRAIL SHALL BE GROUNDED AT LEAST EVERY 500 FEET AND AT LOCATIONS WHERE FENCE CROSSES HIGH VOLTAGE LINES.
2. EVERY FENCE AND GUARDRAIL SHALL HAVE AT LEAST ONE GROUND.
3. ALL END POST SHALL BE GROUNDED.
4. SEE ELECTRICAL DRAWINGS FOR ADDITIONAL GROUNDING REQUIREMENTS.
5. ALL CONNECTIONS BETWEEN FENCING AND CONNECTION BETWEEN GUARDRAILS SHALL PROVIDE ELECTRICAL CONTINUITY.
6. LED AT SPECIFIED LOCATIONS, SEE PLANS.

(DRFI 11046)
(3RFI 20102)

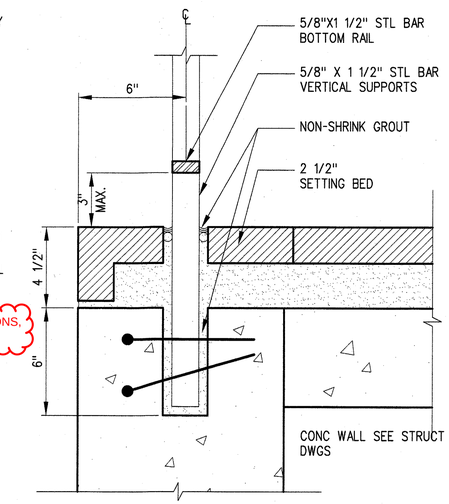

42" GUARDRAIL SLEEVE (1) A-S7-513
3"=1'-0"

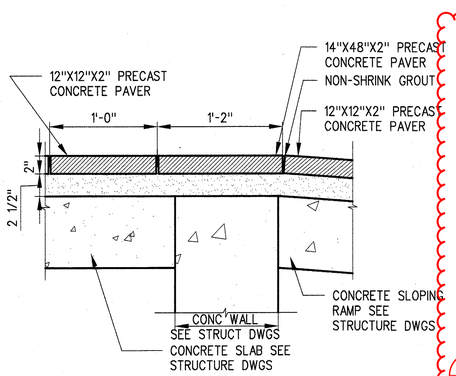

TRANSITION TO SLOPE DETAIL (7) A-S7-513 A-S7-133
1-1/2"=1'-0"

(DRFI 11046)
(3RFI 20102)

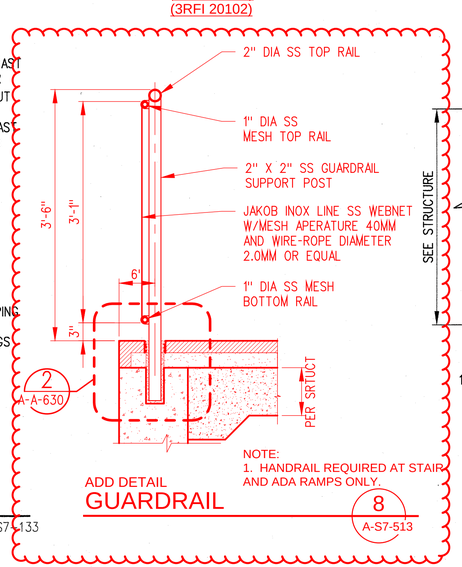

ADD DETAIL
GUARDRAIL (8) A-S7-513

NOTE:
1. HANDRAIL REQUIRED AT STAIR AND ADA RAMPS ONLY.

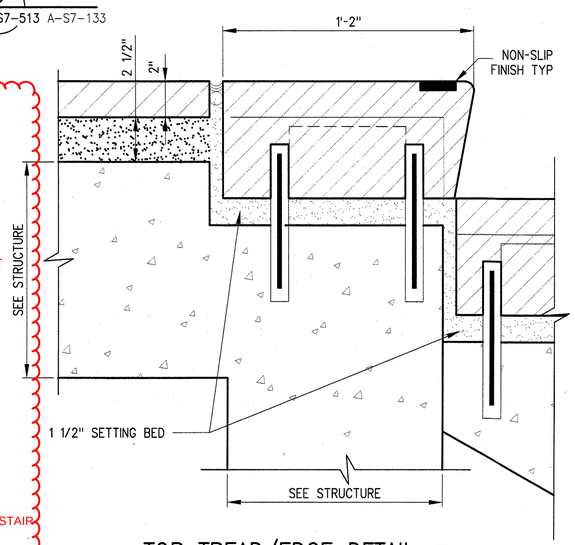

TOP TREAD/EDGE DETAIL (4) A-S7-513 A-S7-133
3"=1'-0"

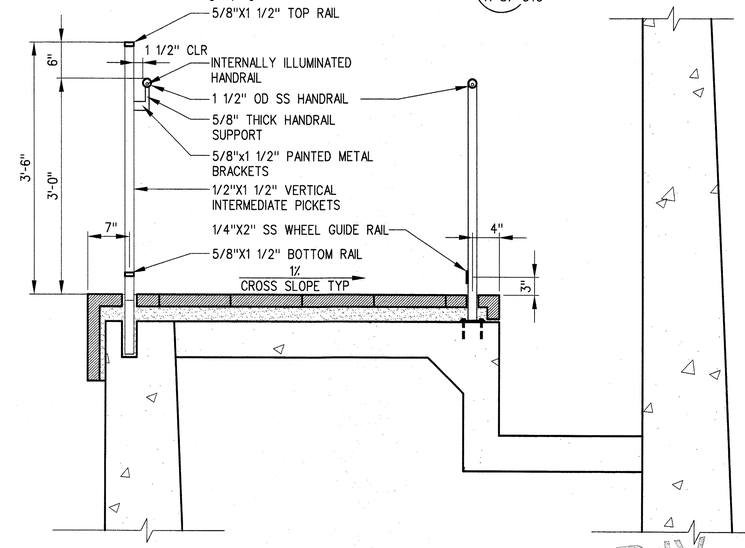

GUARDRAIL AT WALKWAY DETAIL (2) A-S7-513
1"=1'-0"

SRJV
JUN 24 2013
ISSUED FOR CONSTRUCTION

THE PREPARATION OF THIS DRAWING HAS BEEN FINANCED BY THE TAXES OF THE CITIZENS OF LOS ANGELES COUNTY AND OF THE STATE OF CALIFORNIA.

REV	DATE	BY	APP	REG NO	EXPIRES	SEAL HOLDER	DESCRIPTION
0	5/30/13	CS	JT	C21914	8/31/13	JOHN TRAUTMANN	APPROVED FOR CONSTRUCTION

DESIGNED BY J. JACOBSEN
DRAWN BY M. KHANBABIAN
CHECKED BY C. SUERO
IN CHARGE J. TRAUTMANN
DATE 5/30/13

LICENSED ARCHITECT JOHN P. TRAUTMANN No. C21914 Exp. 08-31-13 ARCHITECTURAL STATE OF CALIFORNIA

Exposition Metro Line Construction Authority
Expo
Exposition Construction Authority Approved for Construction Drawings - AFC
JUN 21 2013
EXPO SKANSKA RADOS
444 South Flower Street
Suite 2200
Los Angeles, CA 90071
TEL (213) 443-7463
FAX (213) 362-9481
PARSONS BRINCKERHOFF
CURRENT STATUS

EXPOSITION LRT PROJECT- PHASE 2
COLORADO/4TH STREET STATION
MISCELLANEOUS STATION DETAILS

CONTRACT NO XP8902-002
DRAWING NO A-S7-513
REV 0
SCALE AS NOTED
SHEET NO

C:\Users\khanbabiamm\Desktop\steel-poplexo\2-A-S7-513.dwg
29-May-13 9:09 AM Khanbabian, Melinah

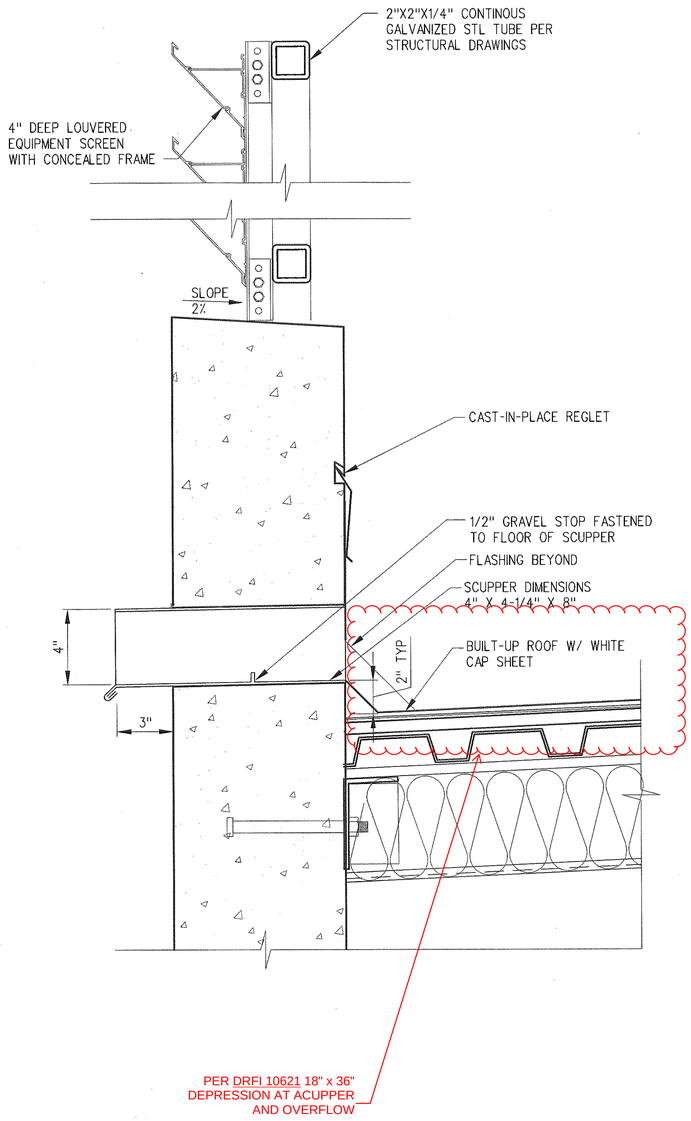

WALL SECTION AT OVERFLOW SCUPPER (3 / A-A-611)
3"=1'-0"

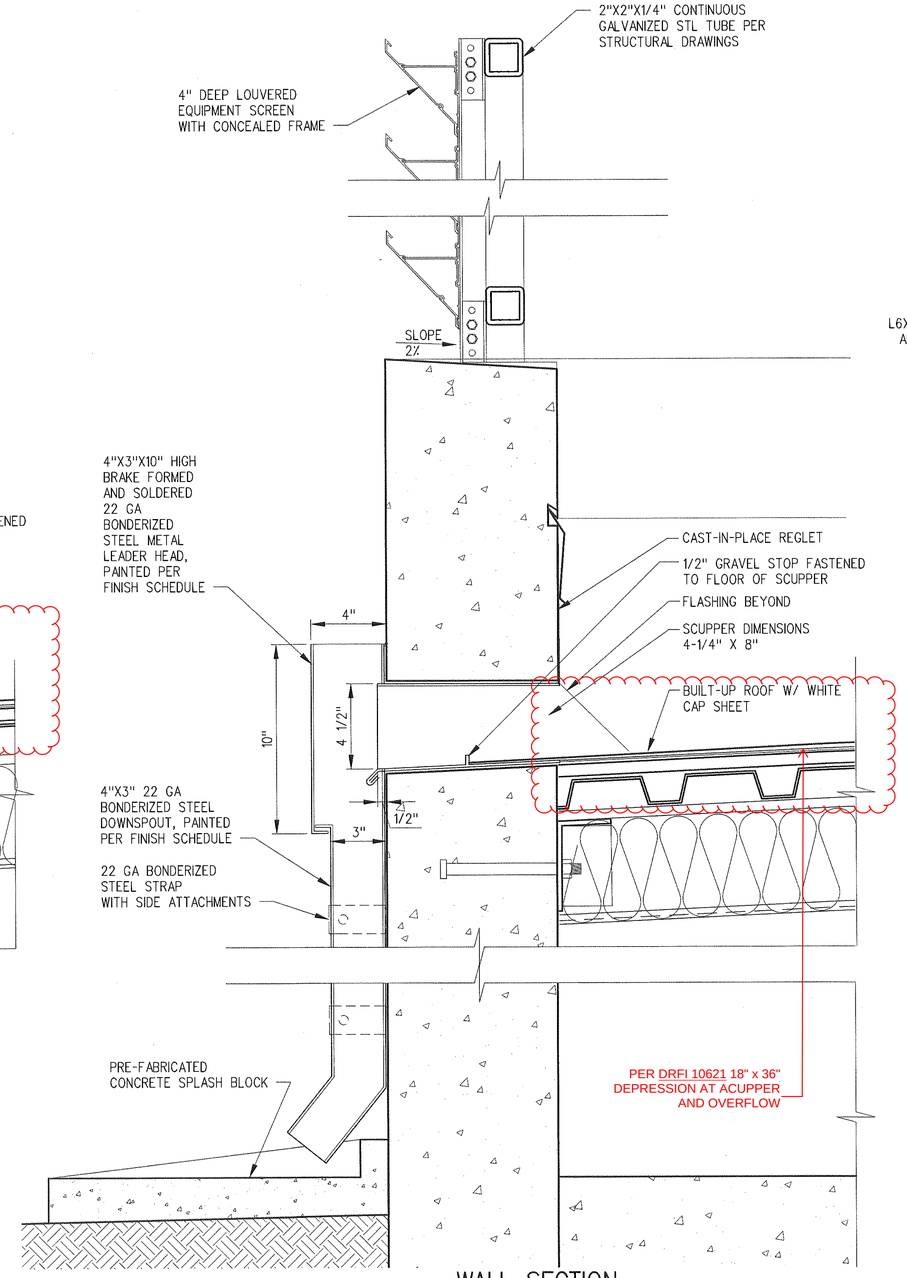

WALL SECTION AT DOWNSPOUT (2 / A-A-611)
3"=1'-0"

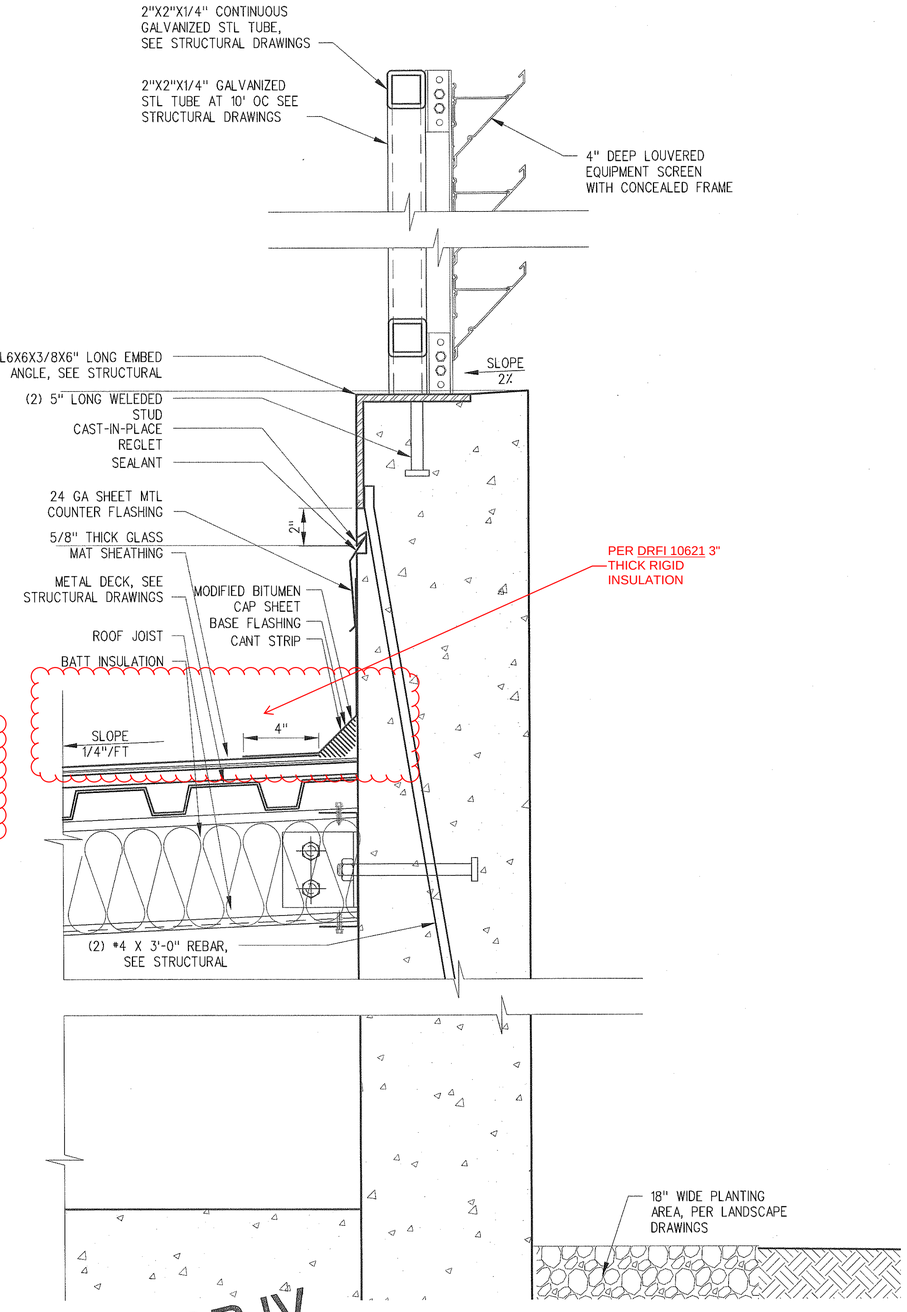

WALL SECTION (1 / A-A-611)
3"=1'-0"

SRJV
FEB 01 2013
ISSUED FOR CONSTRUCTION

THE PREPARATION OF THIS DRAWING HAS BEEN FINANCED BY THE TAXES OF THE CITIZENS OF LOS ANGELES COUNTY AND OF THE STATE OF CALIFORNIA.

REV	DATE	BY	APP	REG NO	EXPIRES	SEAL HOLDER	DESCRIPTION
0	1/24/13	CS	JT	C21914	8/31/13	JOHN TRAUTMANN	APPROVED FOR CONSTRUCTION

DESIGNED BY J. JACOBSEN
DRAWN BY M. KHANBABIAN
CHECKED BY C. SUERO
IN CHARGE J. TRAUTMANN
DATE 1/24/13

LICENSED ARCHITECT JOHN P. TRAUTMANN No. C21914 Exp. 08-31-13 ARCHITECTURAL STATE OF CALIFORNIA

Exposition Metro Line Construction Authority
Expo
Exposition Construction Authority Approved for Construction Drawings - AFC
JAN 31 2013
EXPO SKANSKA RADOS
444 South Flower Street
Suite 2200
Los Angeles, CA 90071
TEL (213) 443-7463
FAX (213) 362-9481
PARSONS BRINCKERHOFF
CURRENT STATUS

EXPOSITION LRT PROJECT- PHASE 2
COMMON STATION DETAILS
COMMUNICATIONS/SIGNAL BUILDING DETAILS
SHEET 1 OF 2

CONTRACT NO XP8902-002
DRAWING NO A-A-611
REV 0
SCALE 3" = 1'-0"
SHEET NO

C:\Expo2 Sheets\Common Details\expo2-A-A-611.dwg
24-Jan-13 1:35 PM Jacobsen, John J.

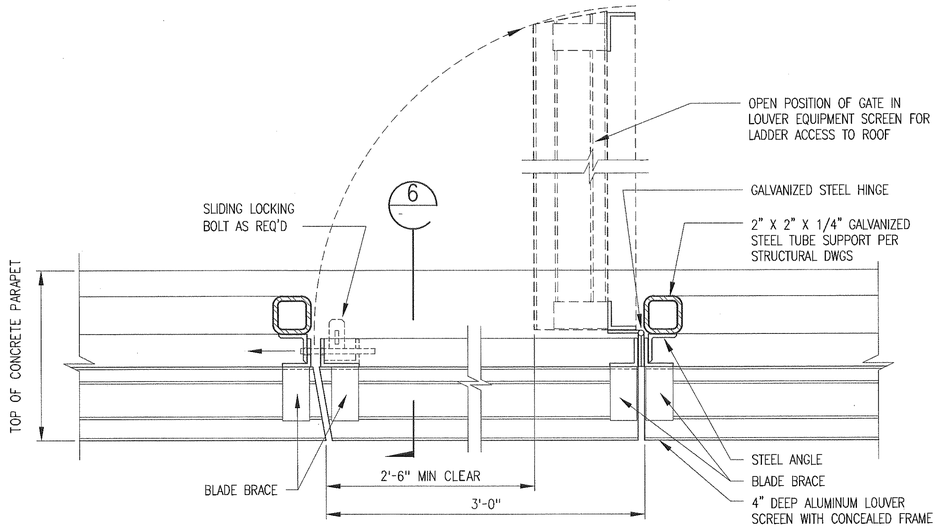

PLAN OF ACCESS GATE IN LOUVER SCREEN (5 / A-A-612)

3"=1'-0"

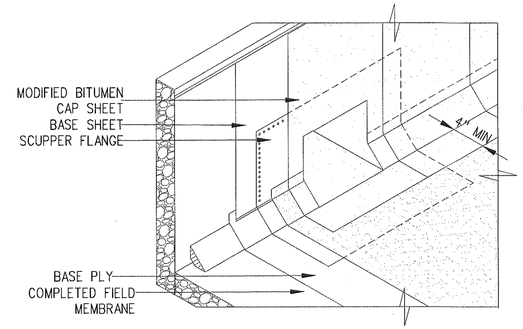

SCUPPER WATERPROOFING DETAIL (3 / A-A-612)

NO SCALE

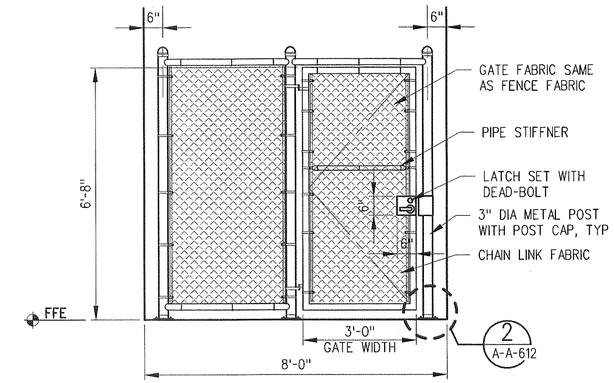

GATE ELEVATION (1 / A-A-612)

1/2"=1'-0"

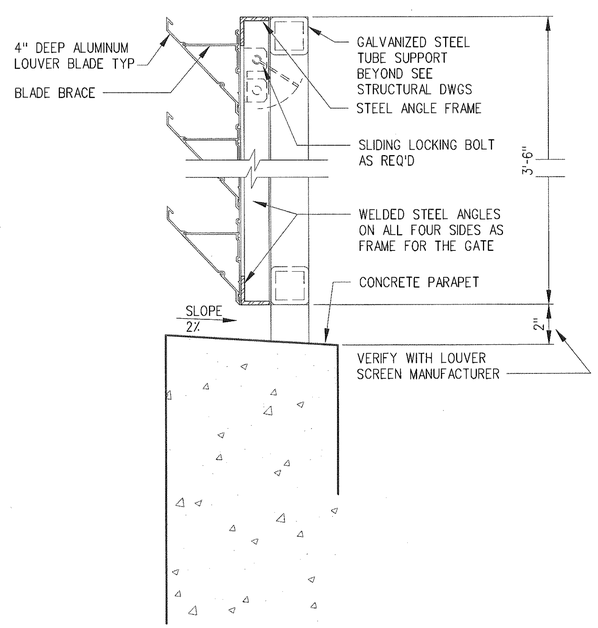

ACCESS GATE DETAIL (6 / A-A-612)

3"=1'-0"

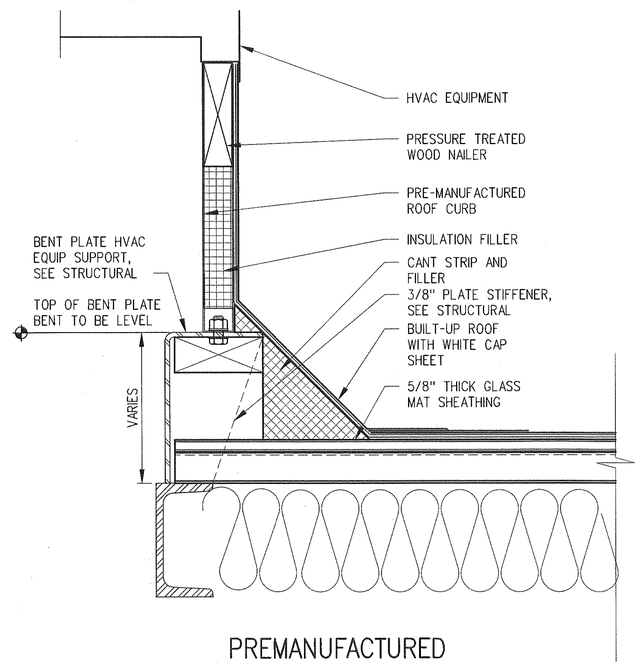

PREMANUFACTURED HVAC ROOF CURB (4 / A-A-612)

3"=1'-0"

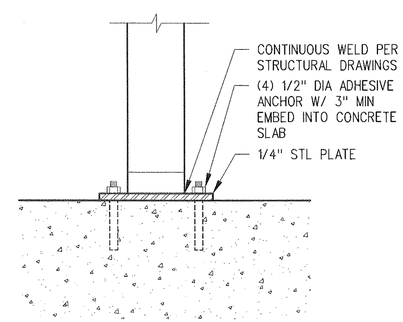

SECTION

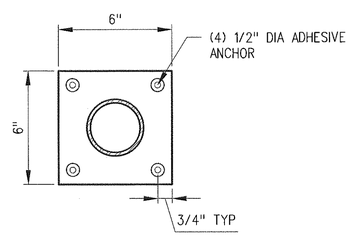

PLAN

GATE POST DETAIL (2 / A-A-612)

3"=1'-0"

SRJV
FEB 01 2013
ISSUED FOR CONSTRUCTION

THE PREPARATION OF THIS DRAWING HAS BEEN FINANCED BY THE TAXES OF THE CITIZENS OF LOS ANGELES COUNTY AND OF THE STATE OF CALIFORNIA.

REV	DATE	BY	APP	REG NO	EXPIRES	SEAL HOLDER	DESCRIPTION
0	1/24/13	CS	JT	C21914	8/31/13	JOHN TRAUTMANN	APPROVED FOR CONSTRUCTION

DESIGNED BY J. JACOBSEN
DRAWN BY M. KHANBABIAN
CHECKED BY C. SUERO
IN CHARGE J. TRAUTMANN
DATE 1/24/13

LICENSED ARCHITECT JOHN P. TRAUTMANN No. C21914 Exp. 08-31-13 ARCHITECTURAL STATE OF CALIFORNIA

Exposition Metro Line Construction Authority
Expo
Exposition Construction Authority Approved for Construction Drawings - AFC
JAN 31 2013
PARSONS BRINCKERHOFF
EXPO SKANSKA RADOS
444 South Flower Street
Suite 2200
Los Angeles, CA 90071
TEL (213) 443-7463
FAX (213) 362-9481
CURRENT STATUS

EXPOSITION LRT PROJECT- PHASE 2
COMMON STATION DETAILS
COMMUNICATIONS/SIGNAL BUILDING DETAILS
SHEET 2 OF 2

CONTRACT NO XP8902-002
DRAWING NO A-A-612
REV 0
SCALE AS NOTED
SHEET NO

C:\Expo2 Sheets\Common Details\expo2-A-A-612.dwg
24-Jan-13 1:05 PM Jacobsen, John J.

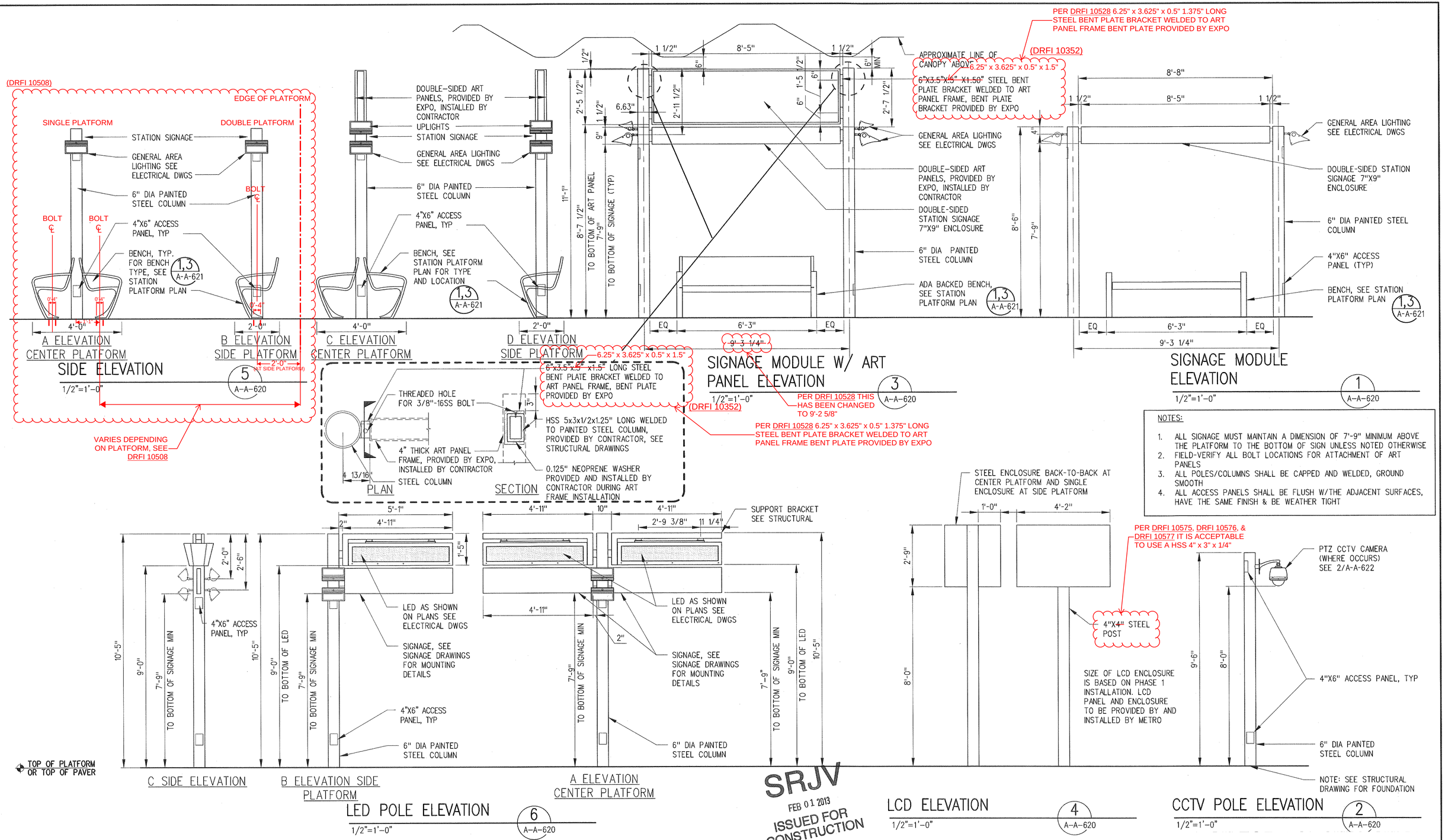

NOTES:

1. ALL SIGNAGE MUST MAINTAIN A DIMENSION OF 7'-9" MINIMUM ABOVE THE PLATFORM TO THE BOTTOM OF SIGN UNLESS NOTED OTHERWISE
2. FIELD-VERIFY ALL BOLT LOCATIONS FOR ATTACHMENT OF ART PANELS
3. ALL POLES/COLUMNS SHALL BE CAPPED AND WELDED, GROUND SMOOTH
4. ALL ACCESS PANELS SHALL BE FLUSH W/THE ADJACENT SURFACES, HAVE THE SAME FINISH & BE WEATHER TIGHT

SRJV
FEB 01 2013
ISSUED FOR CONSTRUCTION

THE PREPARATION OF THIS DRAWING HAS BEEN FINANCED BY THE TAXES OF THE CITIZENS OF LOS ANGELES COUNTY AND OF THE STATE OF CALIFORNIA.

REV	DATE	BY	APP	REG NO	EXPIRES	SEAL HOLDER	DESCRIPTION
0	1/24/13	CS	JT	C21914	8/31/13	JOHN TRAUTMANN	APPROVED FOR CONSTRUCTION

DESIGNED BY J. JACOBSEN
DRAWN BY M. KHANBABIAN
CHECKED BY C. SUERO
IN CHARGE J. TRAUTMANN
DATE 1/24/13

LICENSED ARCHITECT JOHN P. TRAUTMANN No. C21914 Exp. 08-31-13 ARCHITECTURAL STATE OF CALIFORNIA

Exposition Metro Line Construction Authority
Expo
Exposition Construction Authority Approved for Construction Drawings - AFC
JAN 31 2013
EXPO SKANSKA RADOS
444 South Flower Street
Suite 2200
Los Angeles, CA 90071
TEL (213) 443-7463
FAX (213) 362-9481
PARSONS BRINCKERHOFF
CURRENT STATUS

EXPOSITION LRT PROJECT- PHASE 2
COMMON STATION DETAILS
SIGNAGE/SYSTEMS MODULE, VMS
PTZ CCTV AND SIGNAGE

CONTRACT NO XP8902-002
DRAWING NO A-A-620
REV 0
SCALE 1/2" = 1'-0"
SHEET NO

C:\projectwise\pb\projectwise\ln\jacobsenj\lans09990\exp02-A-a-620.dwg
30-Jan-13 9:55 AM Jacobsen, John J.

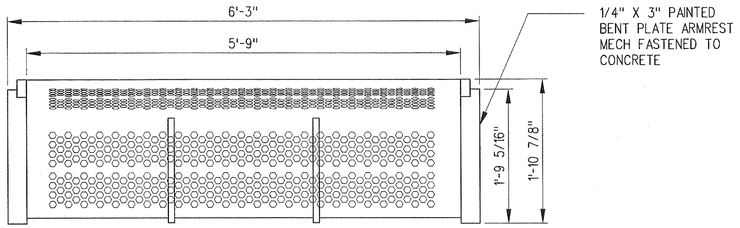

ADA BACKED BENCH PLAN

1"=1'-0" 3 A-A-621

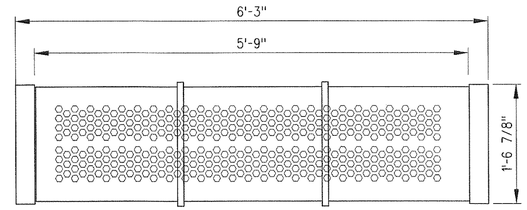

BACKLESS BENCH PLAN

1"=1'-0" 1 A-A-621

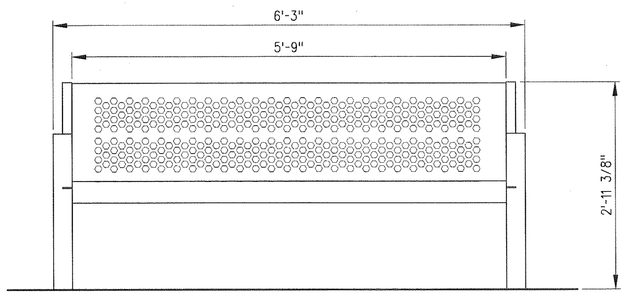

ELEVATION A

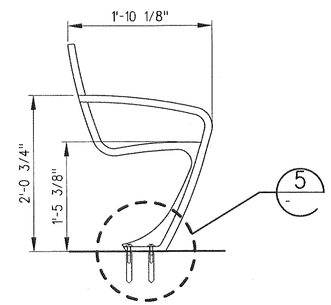

ELEVATION B

ADA BACKED BENCH ELEVATIONS

1"=1'-0" 4 A-A-621

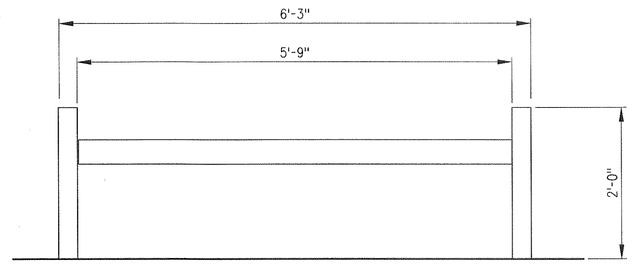

ELEVATION A

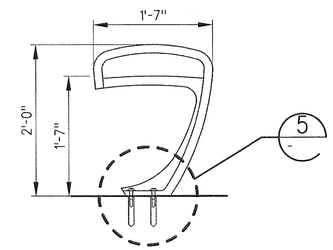

ELEVATION B

BACKLESS BENCH ELEVATIONS

1"=1'-0" 2 A-A-621

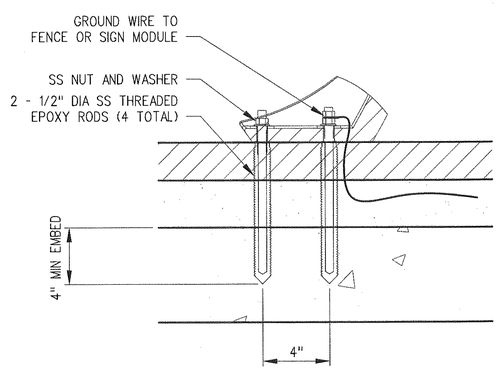

BENCH ANCHOR DETAIL

3"=1'-0" 5 A-A-621

NOTES: (BACKED AND BACKLESS BENCHES)

1. MANUFACTURER:
   A. FORMS+SURFACES
2. MODEL
   BACKED AND BACKLESS 6' "BALANCE BENCH"
3. MATERIALS
   A. BENCH FRAMES: CAST ALUMINUM CANTILEVER TYPE WITH INTEGRAL ARMRESTS.
   B. SEATS: FORMED STAINLESS STEEL, 2mm (NOM. 14 GAUGE)THICKNESS WITH 1.2" HEXAGONAL PERFORATIONS AND TWO SEAT DIVIDERS
4. FINISHES
   A. BENCH FRAMES: POLYESTER POWDERCOAT
   POWDERCOAT COLOR: BRIGHT SILVER OR APPROVAL EQUAL
   B. SEATS: STAINLESS STEEL WITH SANDSTONE FINISH.
5. MOUNTING
   SURFACE MOUNT. D/B CONTRACTOR TO PROVIDE ANCHORS AND STAINLESS STEEL MOUNTING SCREWS
6. TOTAL WEIGHT OF EACH BENCH SHALL NOT EXCEED 1750 LBS PER STRUCT DWGS

SRJV
FEB 01 2013
ISSUED FOR CONSTRUCTION

THE PREPARATION OF THIS DRAWING HAS BEEN FINANCED BY THE TAXES OF THE CITIZENS OF LOS ANGELES COUNTY AND OF THE STATE OF CALIFORNIA.

REV	DATE	BY	APP	REG NO	EXPIRES	SEAL HOLDER	DESCRIPTION
0	1/24/13	CS	JT	C21914	8/31/13	JOHN TRAUTMANN	APPROVED FOR CONSTRUCTION

DESIGNED BY J. JACOBSEN
DRAWN BY M. KHANBABIAN
CHECKED BY C. SUERO
IN CHARGE J. TRAUTMANN
DATE 1/24/13

LICENSED ARCHITECT JOHN P. TRAUTMANN No. C21914 Exp. 08-31-13 ARCHITECTURAL STATE OF CALIFORNIA

Exposition Metro Line Construction Authority
Expo
Exposition Construction Authority Approved for Construction Drawings - AFC
JAN 31 2013

EXPO SKANSKA RADOS

444 South Flower Street
Suite 2200
Los Angeles, CA 90071
TEL (213) 443-7463
FAX (213) 362-9481

PARSONS BRINCKERHOFF

CURRENT STATUS

EXPOSITION LRT PROJECT- PHASE 2
COMMON STATION DETAILS
STATION BENCHES
PLANS, ELEVATIONS AND DETAILS

CONTRACT NO XP8902-002
DRAWING NO A-A-621
REV 0
SCALE 1" = 1'-0"
SHEET NO

C:\Expo2 Sheets\Common Details\expo2-A-A-621.dwg
24-Jan-13 1:06 PM Jacobsen, John J.

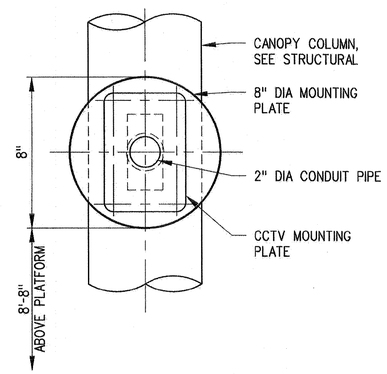

CCTV BRACKET ELEV (E / A-A-622)
3"=1'-0"

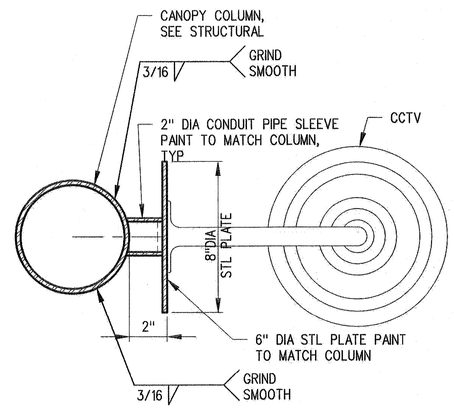

CCTV BRACKET PLAN (2 / A-A-622)
3"=1'-0"

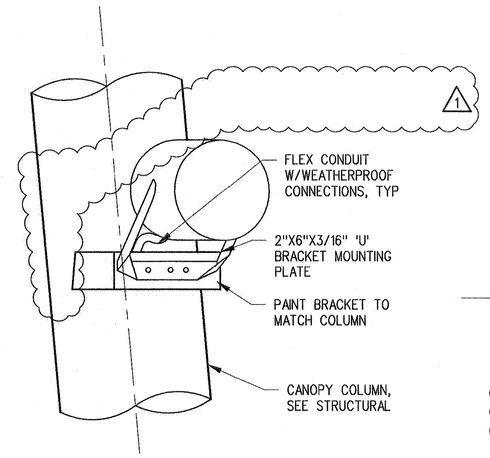

SPEAKER BRACKET ELEVATION (B / A-A-622)
3"=1'-0"

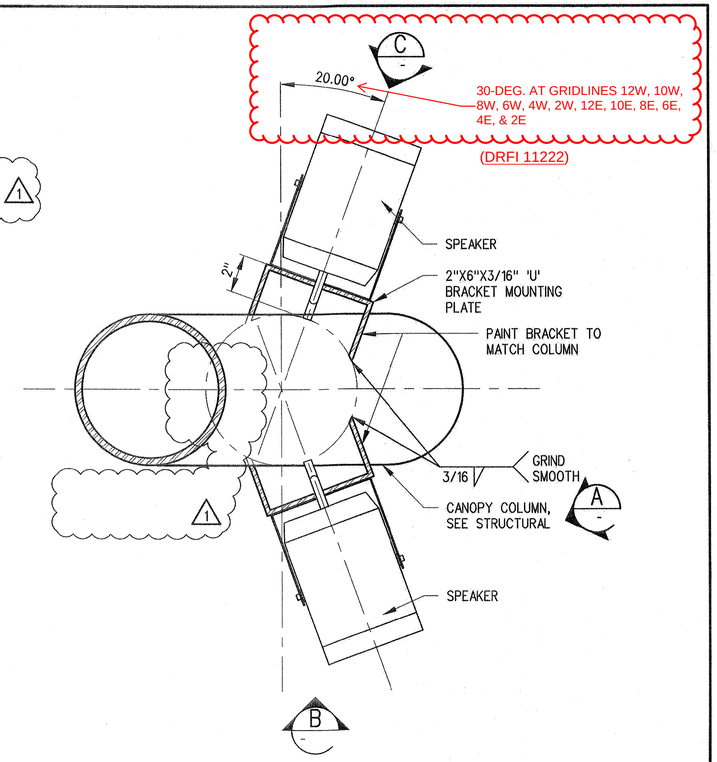

SPEAKER BRACKET PLAN (1 / A-A-622)
3"=1'-0"

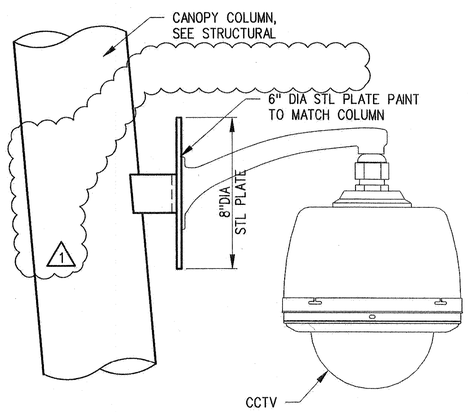

CCTV BRACKET ELEVATION (F / A-A-622)
3"=1'-0"

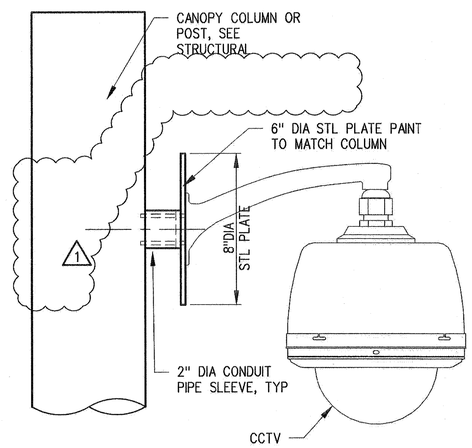

CCTV BRACKET ELEVATION (D / A-A-622)
3"=1'-0"

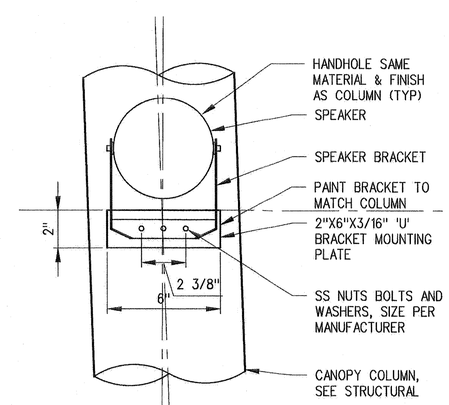

SPEAKER BRACKET ELEVATION (C / A-A-622)
3"=1'-0"

NOTE:
SPEAKER HOUSING AND BRACKET TO HAVE SAME FINISH AS THE POST IT IS MOUNTED TO.

SRJV
JAN 24 2014
ISSUED FOR CONSTRUCTION
Exposition Construction Authority
Approved for Construction
Drawings - AFC
JAN 23 2014

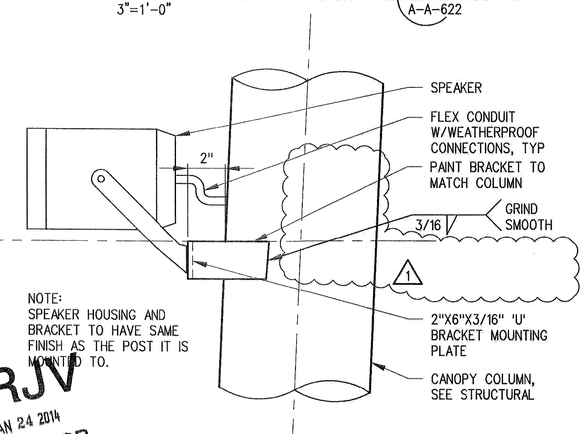

SPEAKER BRACKET ELEVATION (A / A-A-622)
3"=1'-0"

THE PREPARATION OF THIS DRAWING HAS BEEN FINANCED BY THE TAXES OF THE CITIZENS OF LOS ANGELES COUNTY AND OF THE STATE OF CALIFORNIA.

REV	DATE	BY	APP	REG NO	EXPIRES	SEAL HOLDER	DESCRIPTION
1	7/25/13	JJ	JT	C21914	8/31/13	JOHN TRAUTMANN	ECI 17
0	1/24/13	CS	JT	C21914	8/31/13	JOHN TRAUTMANN	APPROVED FOR CONSTRUCTION

DESIGNED BY J. JACOBSEN
DRAWN BY M. KHANBABIAN
CHECKED BY C. SUERO
IN CHARGE J. TRAUTMANN
DATE 7/25/13

LICENSED ARCHITECT JOHN P. TRAUTMANN No. C21914 Exp. 08-31-13 ARCHITECTURAL STATE OF CALIFORNIA

Exposition Metro Line Construction Authority
Expo
EXPO SKANSKA RADOS
444 South Flower Street
Suite 2200
Los Angeles, CA 90071
TEL (213) 443-7463
FAX (213) 362-9481
PARSONS BRINCKERHOFF

CURRENT STATUS

EXPOSITION LRT PROJECT- PHASE 2
COMMON STATION DETAILS
SPEAKER AND CCTV
MOUNTING DETAILS

CONTRACT NO XP8902-002
DRAWING NO A-A-622
REV 1
SCALE 3" = 1'-0"
SHEET NO

C:\projectwise\pb\projectwise\ini\jacobsenj\dms80986\expo2-A-A-622.dwg
19-Aug-13 4:21 PM Jacobsen, John J.

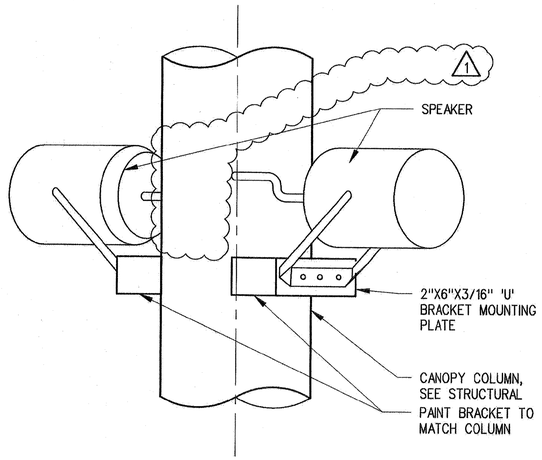

SPEAKER BRACKET ELEVATION (C / A-A-623)
3"=1'-0"

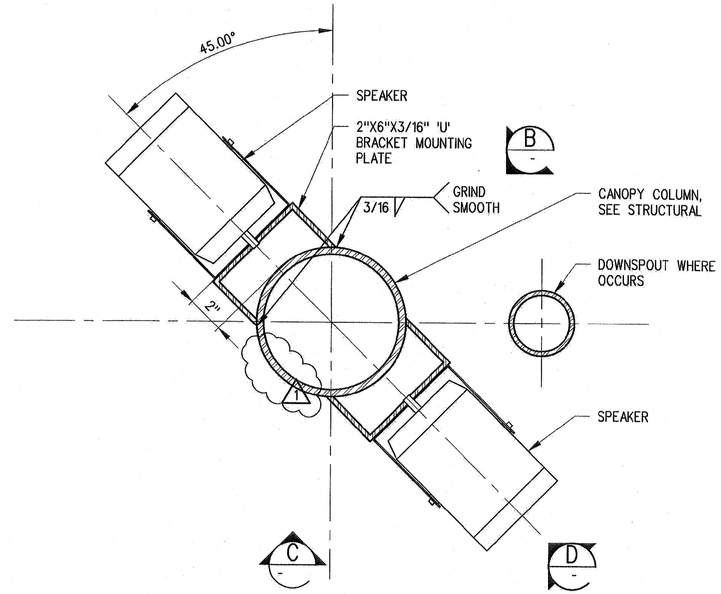

SPEAKER BRACKET PLAN (2 / A-A-623)
3"=1'-0"

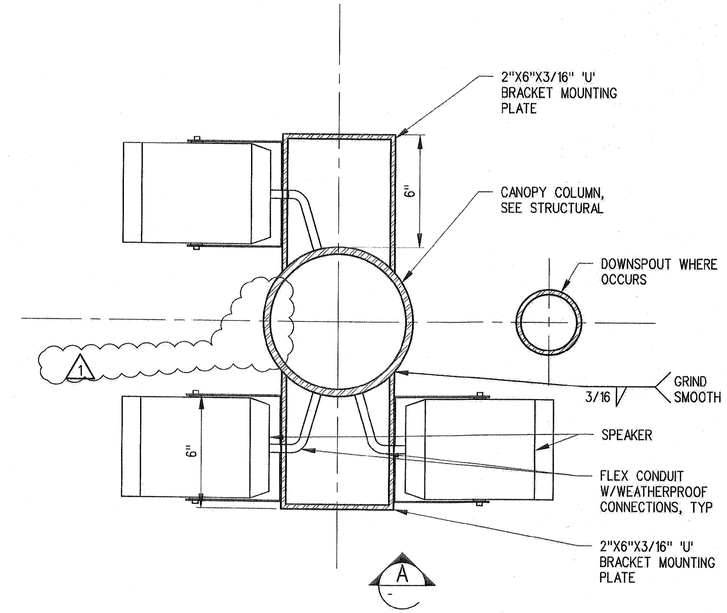

SPEAKER BRACKET PLAN (1 / A-A-623)
3"=1'-0"

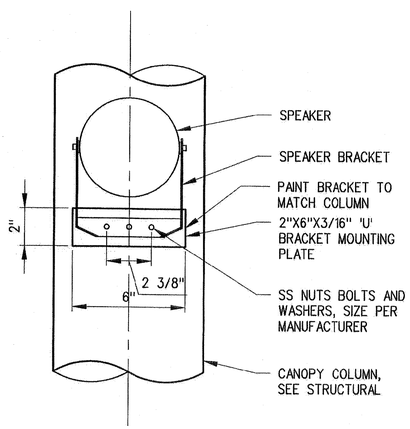

SPEAKER BRACKET ELEVATION (D / A-A-623)
3"=1'-0"

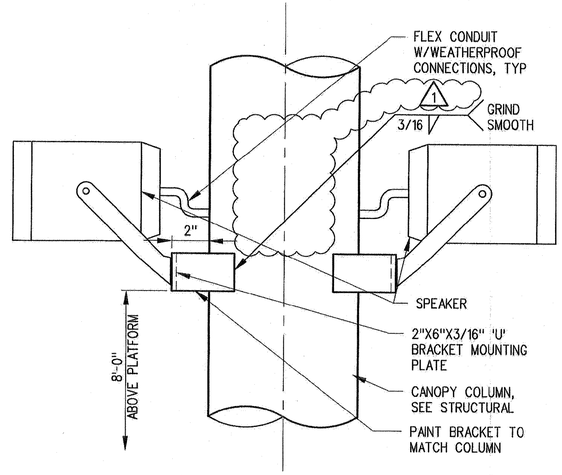

SPEAKER BRACKET ELEVATION (B / A-A-623)
3"=1'-0"

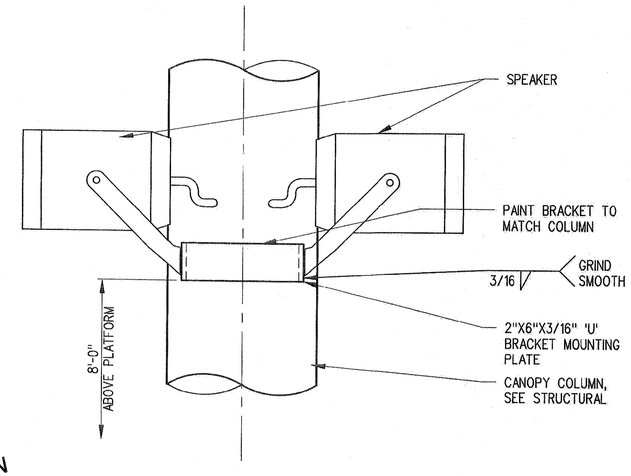

SPEAKER BRACKET ELEVATION (A / A-A-623)
3"=1'-0"

SRJV
JAN 24 2014
ISSUED FOR CONSTRUCTION

Exposition Construction Authority
Approved for Construction
Drawings - AFC
JAN 23 2014

THE PREPARATION OF THIS DRAWING HAS BEEN FINANCED BY THE TAXES OF THE CITIZENS OF LOS ANGELES COUNTY AND OF THE STATE OF CALIFORNIA.

REV	DATE	BY	APP	REG NO	EXPIRES	SEAL HOLDER	DESCRIPTION
1	7/25/13	JJ	JT	C21914	8/31/13	JOHN TRAUTMANN	ECI 17
0	2/8/13	CS	JT	C21914	8/31/13	JOHN TRAUTMANN	APPROVED FOR CONSTRUCTION

DESIGNED BY J. JACOBSEN
DRAWN BY M. KHANBABIAN
CHECKED BY C. SUERO
IN CHARGE J. TRAUTMANN
DATE 7/25/13

LICENSED ARCHITECT — JOHN P. TRAUTMANN — No. C21914 — Exp. 08-31-13 — ARCHITECTURAL — STATE OF CALIFORNIA

Exposition Metro Line Construction Authority
Expo

EXPO SKANSKA RADOS

444 South Flower Street
Suite 2200
Los Angeles, CA 90071
TEL (213) 443-7463
FAX (213) 362-9481

PARSONS BRINCKERHOFF

CURRENT STATUS

EXPOSITION LRT PROJECT- PHASE 2
COMMON STATION DETAILS
SPEAKER MOUNTING DETAILS

CONTRACT NO XP8902-002
DRAWING NO A-A-623
REV 1
SCALE 3" = 1'-0"
SHEET NO

C:\projectwise\pb\projectwise\jacobsenj\jacobsenj\dms18996\expo2-A-A-623.dwg
19-Aug-13 4:22 PM Jacobsen, John J.

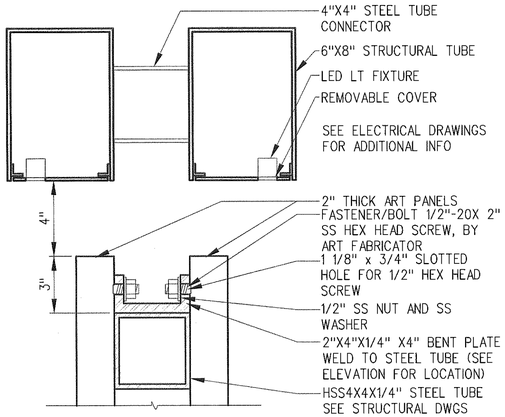

NOTE: FASTENER/BOLT 1/2"-20 X 2" SS HEX HEAD SCREW SHALL HAVE A MIN YIELD STRENGTH OF 30KSI. CONTRACTOR TO PROVIDE AND INSTALL SS NUTS AND WASHERS

SECTION AT TOP OF ARCH WITH LIGHT SLOT

5 / A-A-625

3"=1'-0"

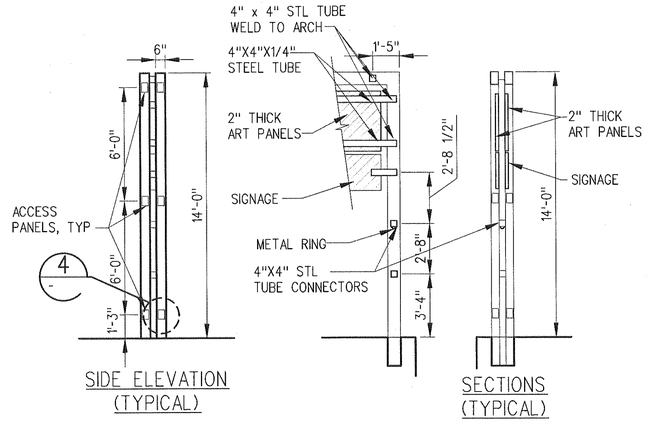

TYPICAL GATEWAY ARCH SIDE ELEVATION AND SECTION

3 / A-A-625

1/4"=1'-0"

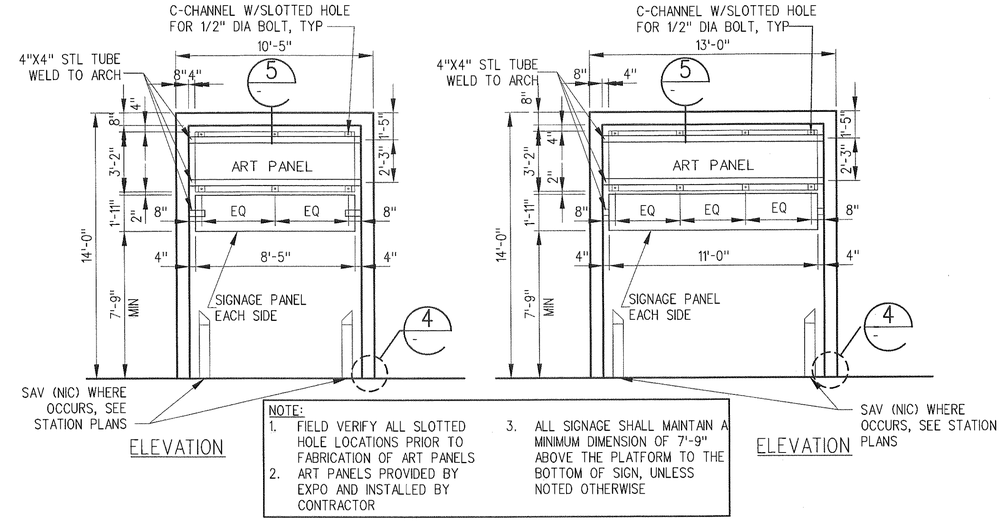

NOTE:
1. FIELD VERIFY ALL SLOTTED HOLE LOCATIONS PRIOR TO FABRICATION OF ART PANELS
2. ART PANELS PROVIDED BY EXPO AND INSTALLED BY CONTRACTOR
3. ALL SIGNAGE SHALL MAINTAIN A MINIMUM DIMENSION OF 7'-9" ABOVE THE PLATFORM TO THE BOTTOM OF SIGN, UNLESS NOTED OTHERWISE

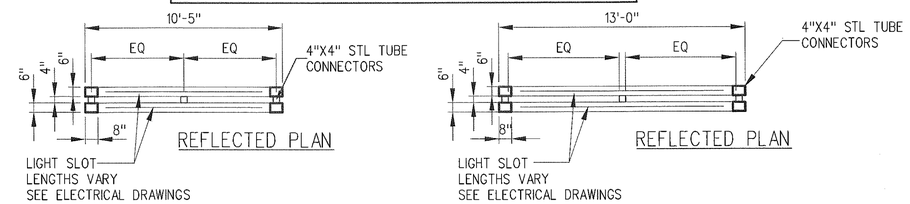

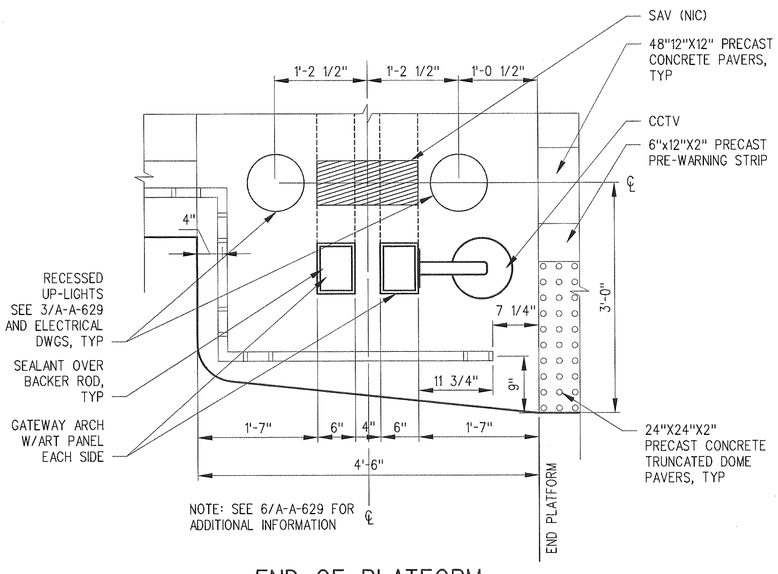

NOTE: SEE 6/A-A-629 FOR ADDITIONAL INFORMATION

END OF PLATFORM DETAIL

6 / A-A-625

1"=1'-0"

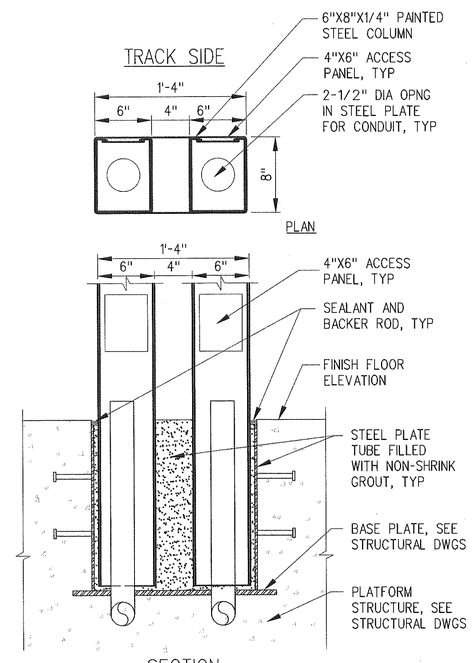

ACCESS PANEL DETAIL

4 / A-A-625

1 1/2"=1'-0"

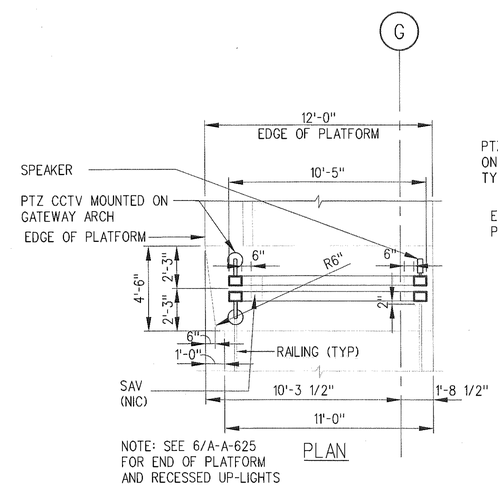

TYPICAL GATEWAY ARCH AT SIDE PLATFORMS

2 / A-A-625

1/4"=1'-0"

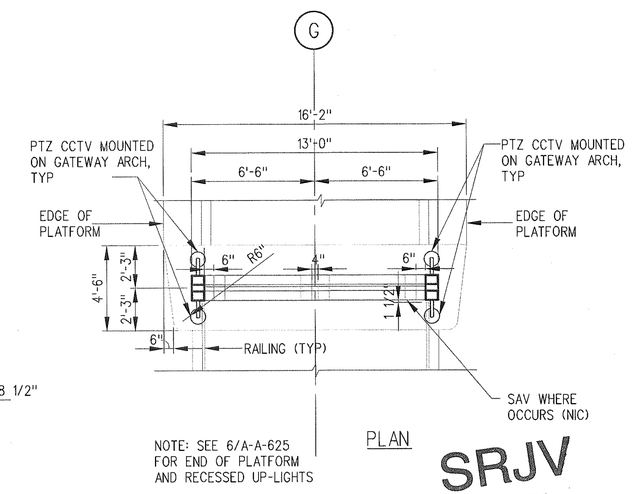

TYPICAL GATEWAY ARCH AT CENTER PLATFORMS

1 / A-A-625

1/4"=1'-0"

SRJV
FEB 01 2013
ISSUED FOR CONSTRUCTION

THE PREPARATION OF THIS DRAWING HAS BEEN FINANCED BY THE TAXES OF THE CITIZENS OF LOS ANGELES COUNTY AND OF THE STATE OF CALIFORNIA.

REV	DATE	BY	APP	REG NO	EXPIRES	SEAL HOLDER	DESCRIPTION
0	1/24/13	CS	JT	C21914	8/31/13	JOHN TRAUTMANN	APPROVED FOR CONSTRUCTION

DESIGNED BY J. JACOBSEN
DRAWN BY M. KHANBABIAN
CHECKED BY C. SUERO
IN CHARGE J. TRAUTMANN
DATE 1/24/13

LICENSED ARCHITECT JOHN P. TRAUTMANN No. C21914 Exp. 08-31-13 ARCHITECTURAL STATE OF CALIFORNIA

Exposition Metro Line Construction Authority
Expo
Exposition Construction Authority Approved for Construction Drawings - AFC
JAN 31 2013
PARSONS BRINCKERHOFF
EXPO SKANSKA RADOS
444 South Flower Street
Suite 2200
Los Angeles, CA 90071
TEL (213) 443-7463
FAX (213) 362-9481
CURRENT STATUS

EXPOSITION LRT PROJECT- PHASE 2
COMMON STATION DETAILS
METAL GATEWAY ARCHES
PLANS,SECTIONS,ELEVATIONS,DETAILS

CONTRACT NO XP8902-002
DRAWING NO A-A-625
REV 0
SCALE AS NOTED
SHEET NO

C:\Expo2 Sheets\Common Details\expo2-4-A-625.dwg
24-Jan-13 1:06 PM Jacobsen, John J.

C:\projectwise\pb\projectwise\int\jacobsenj\dms08896\expo2-A-A-629.dwg

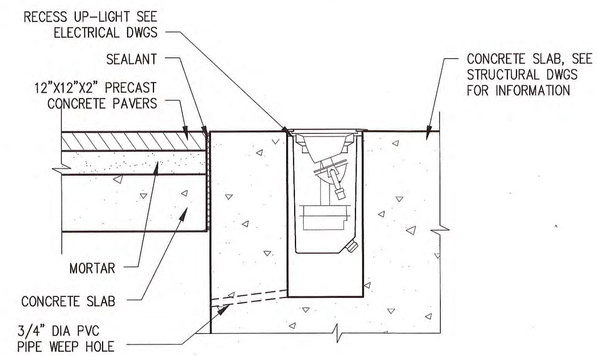

RECESSED FLOOR MOUNTED LIGHT FIXTURE DETAIL (3 / A-A-629)

1-1/2"=1'-0"

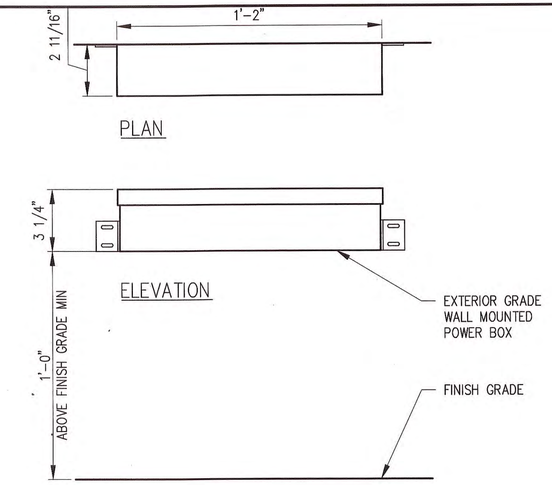

NOTE:
LOCATE AND INSTALL IN CONCEALED LOCATION AND PER COMM DRAWINGS.

WALL MOUNTED LED POWER BOX (1 / A-A-629)

1"=1'-0"

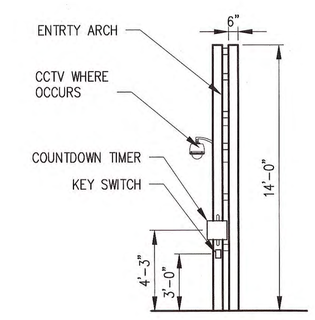

SIDE ELEVATION (TYPICAL)

COUNTDOWN TIMER, 12" PEDESTRIAN SIGNAL HOUSING, CALTRANS SIDE MOUNTING, ALUMINUM BLACK, SP-1/ES-4B & ES-4D.
MANUFACTURED BY MC CAIN (MODIFIED)

SEE 2/A-A-629 FOR PLAN VIEW

COUNTDOWN TIMER LOCATION DETAIL (4 / A-A-629)

1/4"=1'-0"

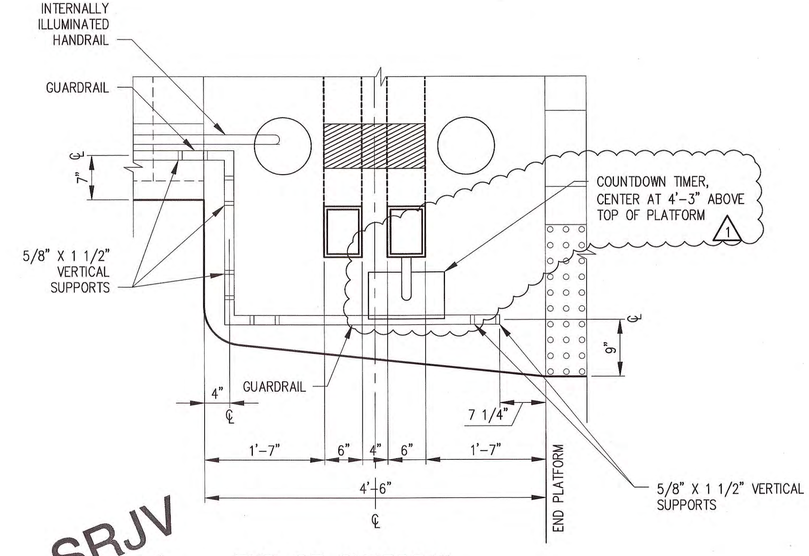

SRJV
JAN 14 2014
ISSUED FOR CONSTRUCTION

END OF GUARDRAIL AT PLATFORM (2 / A-A-629)

1"=1'-0"

THE PREPARATION OF THIS DRAWING HAS BEEN FINANCED BY THE TAXES OF THE CITIZENS OF LOS ANGELES COUNTY AND OF THE STATE OF CALIFORNIA.

REV	DATE	BY	APP	REG NO	EXPIRES	SEAL HOLDER	DESCRIPTION
1	10/22/13	JJ	JT	C21914	8/31/15	JOHN TRAUTMANN	ECI 51
0	1/24/13	CS	JT	C21914	8/31/13	JOHN TRAUTMANN	APPROVED FOR CONSTRUCTION

DESIGNED BY J. JACOBSEN
DRAWN BY M. KHANBABIAN
CHECKED BY C. SUERO
IN CHARGE J. TRAUTMANN
DATE 1/24/13

LICENSED ARCHITECT — JOHN P. TRAUTMANN — No. C21914 — Exp. 08-31-15 — ARCHITECTURAL — STATE OF CALIFORNIA

Exposition Metro Line Construction Authority
Expo
Exposition Construction Authority Approved for Construction Drawings - AFC
JAN 13 2014

SKANSKA RADOS

444 South Flower Street
Suite 2200
Los Angeles, CA 90071
TEL (213) 443-7463
FAX (213) 362-9481

PARSONS BRINCKERHOFF

CURRENT STATUS

EXPOSITION LRT PROJECT- PHASE 2
COMMON STATION DETAILS
HANDRAIL LED DRIVER DETAILS

CONTRACT NO XP8902-002
DRAWING NO A-A-629
REV 1
SCALE AS NOTED
SHEET NO

Jay Jacobsen 10:09 AM 4-Nov-13

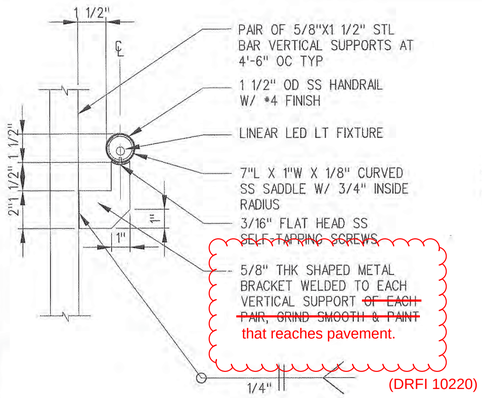

TYPICAL HANDRAIL SUPPORT DETAIL

3 / A-A-630

3"=1'-0"

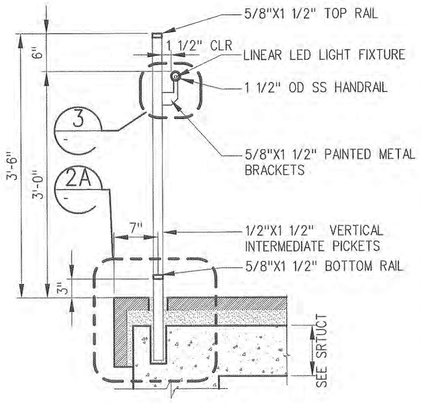

TYPICAL HANDRAIL AND GUARDRAIL SECTION

B / A-A-630

1"=1'-0"

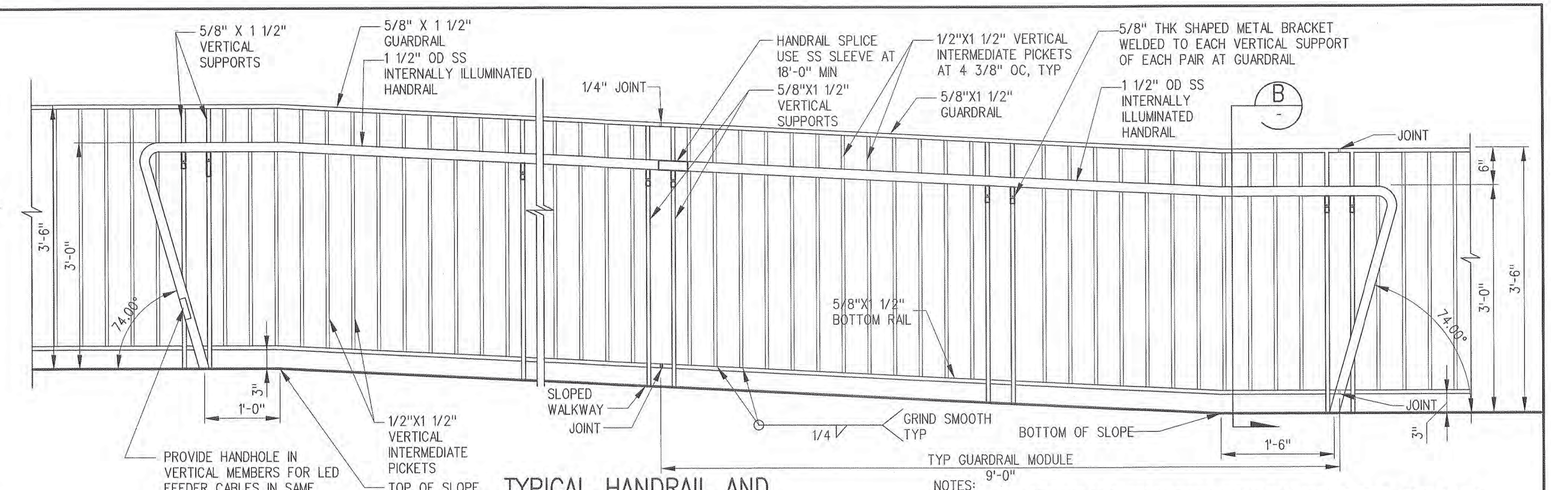

TYPICAL HANDRAIL AND GUARDRAIL ELEVATION

A / A-A-630

1"=1'-0"

NOTES:

1. 2010 CBC, SEC 1013.3: REQUIRED GUARDS SHALL NOT HAVE OPENINGS WHICH ALLOW PASSAGE OF A SPHERE 4" IN DIAMETER.
2. LED POWER BOXES ARE LOCATED IN CRAWL SPACE BELOW PLATFORM. PROVIDE CONDUIT TO HANDRAIL, SEE 1/A-A-629 AND 2B/A-A-630.
3. LED POWER BOX IS REQUIRED FOR EACH 12 FEET OF LED LIGHT FIXTURE.

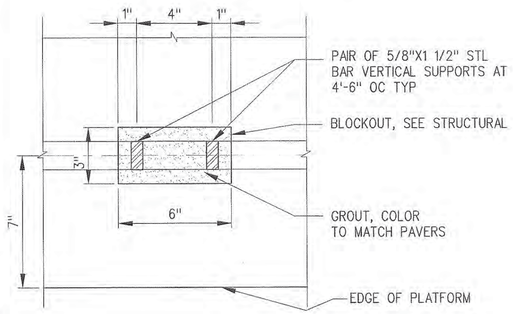

TYPICAL GUARDRAIL POST DETAIL

4 / A-A-630

3"=1'-0"

NOTES:

1. ALL GUARDRAILS AND HANDRAILS SHALL BE GROUNDED AT LEAST EVERY 500 FEET AND AT LOCATIONS WHERE FENCE CROSSES HIGH VOLTAGE LINES.
2. EVERY GUARDRAIL AND HANDRAIL SHALL HAVE AT LEAST ONE GROUND.
3. ALL END POST SHALL BE GROUNDED.
4. SEE ELECTRICAL DRAWINGS FOR ADDITIONAL GROUNDING REQUIREMENTS.
5. ALL CONNECTIONS BETWEEN GUARDRAILS SHALL PROVIDE ELECTRICAL CONTINUITY.
6. A #1/0 COPPER CABLE SHALL BE CONNECTED FROM GUARDRAILS AND HANDRAILS (AS DESCRIBED ON NOTE"2") TO GROUND ROD.

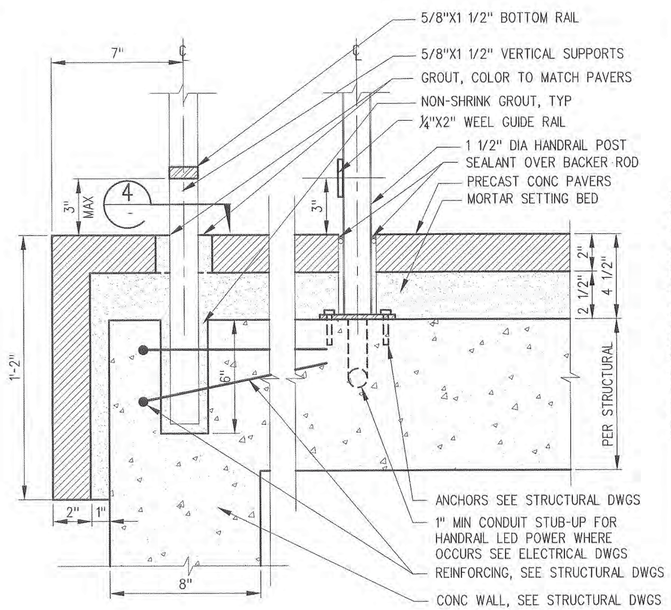

A - GUARDRAIL

B - HANDRAIL

HANDRAIL AND GUARDRAIL POST BASE DETAIL

2 / A-A-630

3"=1'-0"

NOTE: ANCHOR BOLTS SHALL HAVE MIN PENETRATION INTO STRUCTURAL SLAB AS SPECIFIED IN STRUCTURAL DRAWINGS.

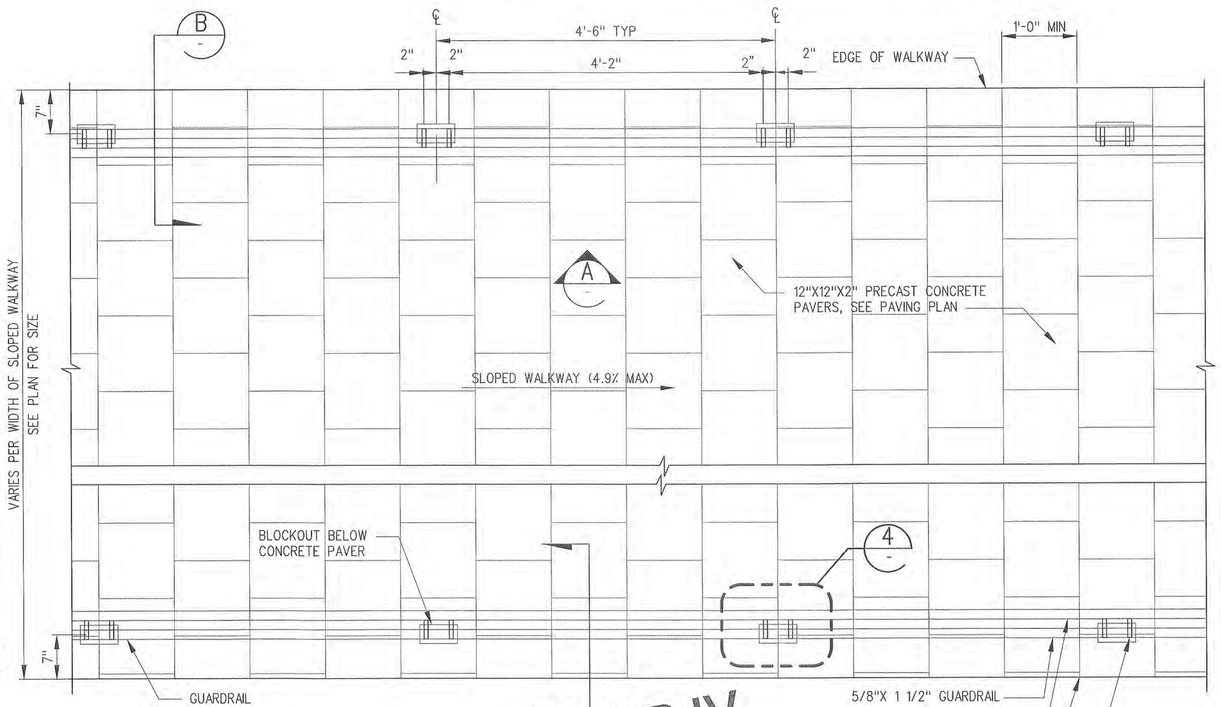

TYPICAL HANDRAIL AND GUARDRAIL PLAN

1 / A-A-630

1"=1'-0"

SRJV
FEB 01 2013
ISSUED FOR CONSTRUCTION

C:\Expo2 Sheets\Common Details\expo2-A-A-630.dwg

24-Jan-13 1:06 PM Jacobsen, John J.

THE PREPARATION OF THIS DRAWING HAS BEEN FINANCED BY THE TAXES OF THE CITIZENS OF LOS ANGELES COUNTY AND OF THE STATE OF CALIFORNIA.

REV	DATE	BY	APP	REG NO	EXPIRES	SEAL HOLDER	DESCRIPTION
0	1/24/13	CS	JT	C21914	8/31/13	JOHN TRAUTMANN	APPROVED FOR CONSTRUCTION

DESIGNED BY J. JACOBSEN
DRAWN BY M. KHANBABIAN
CHECKED BY C. SUERO
IN CHARGE J. TRAUTMANN
DATE 1/24/13

LICENSED ARCHITECT JOHN P. TRAUTMANN No. C21914 Exp. 08-31-13 ARCHITECTURAL STATE OF CALIFORNIA

Exposition Metro Line Construction Authority
Expo
Exposition Construction Authority Approved for Construction Drawings - AFC
JAN 31 2013
EXPO SKANSKA RADOS
444 South Flower Street
Suite 2200
Los Angeles, CA 90071
TEL (213) 443-7463
FAX (213) 362-9461
PARSONS BRINCKERHOFF
CURRENT STATUS

EXPOSITION LRT PROJECT- PHASE 2
COMMON STATION DETAILS
HANDRAIL AND GUARDRAIL DETAILS

CONTRACT NO XP8902-002
DRAWING NO A-A-630
REV 0
SCALE AS NOTED
SHEET NO

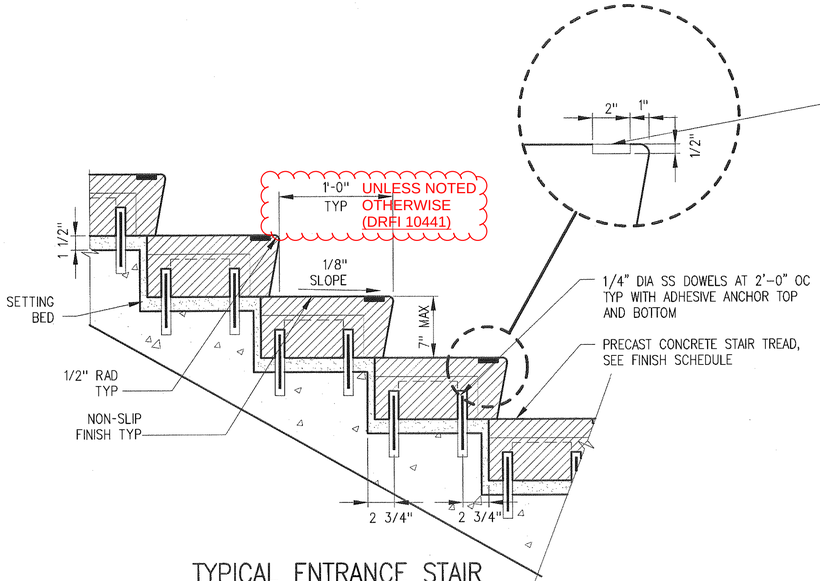

TYPICAL ENTRANCE STAIR PRECAST TREAD DETAIL (5) A-A-631

1 1/2"=1'-0"

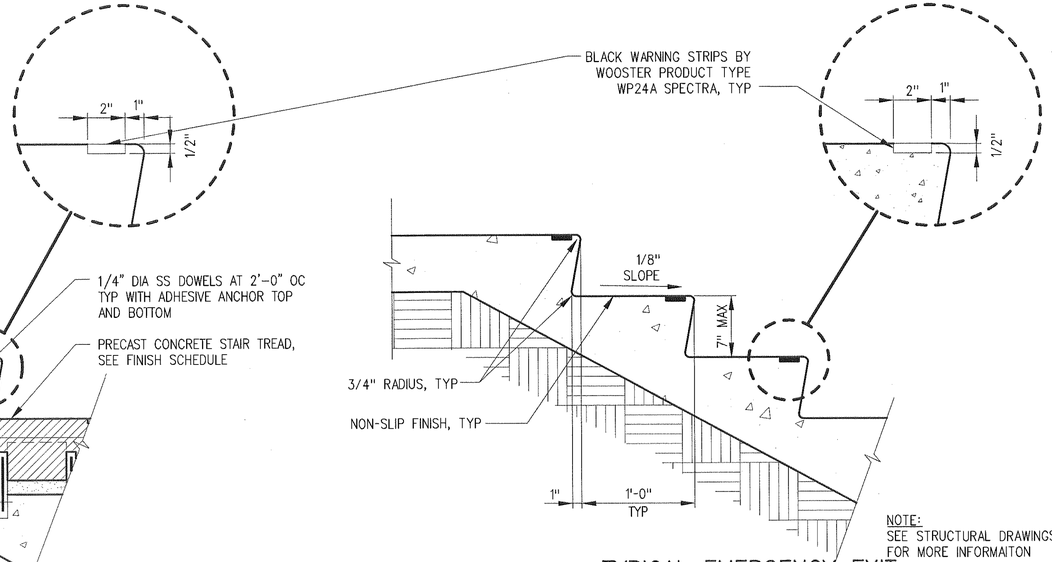

NOTE:
SEE STRUCTURAL DRAWINGS FOR MORE INFORMAITON

TYPICAL EMERGENCY EXIT CONC TREAD DETAIL (3) A-A-631

1 1/2"=1'-0"

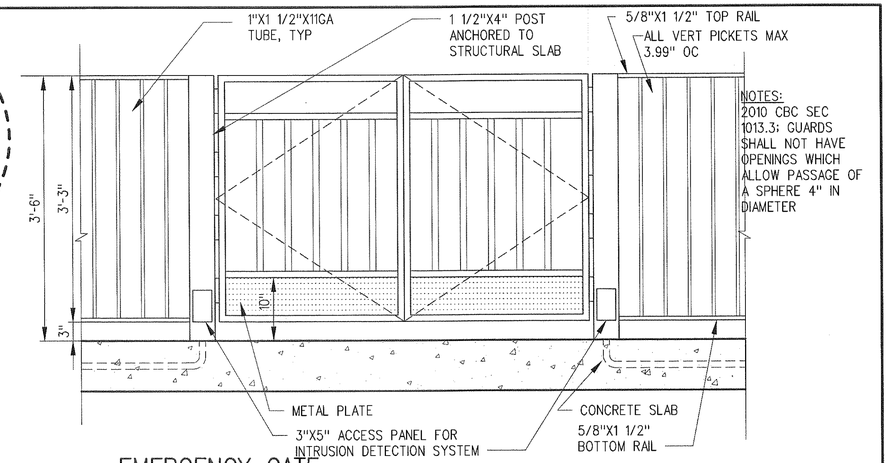

EMERGENCY GATE DETAIL ELEVATION (1) A-A-631

1"=1'-0"

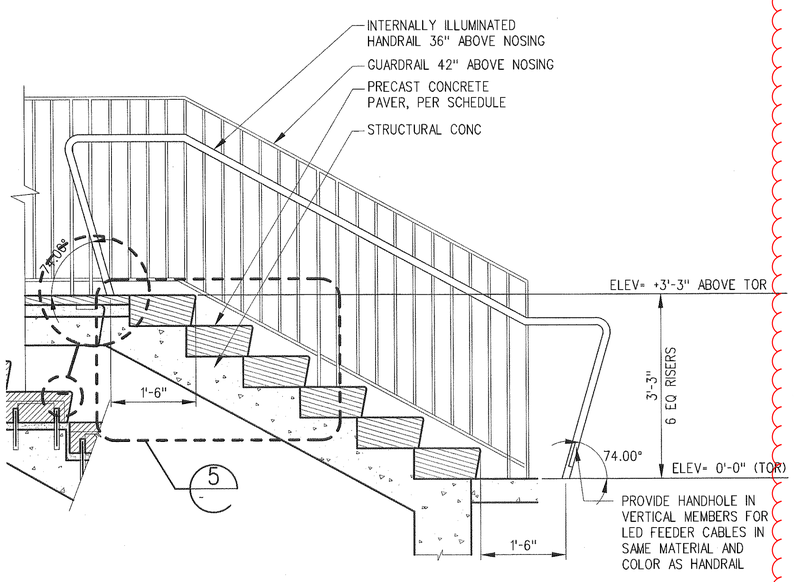

TYPICAL ENTRANCE STAIRS AND LANDING SECTION (6) A-A-631

3/4"=1'-0"

DRFI 10250

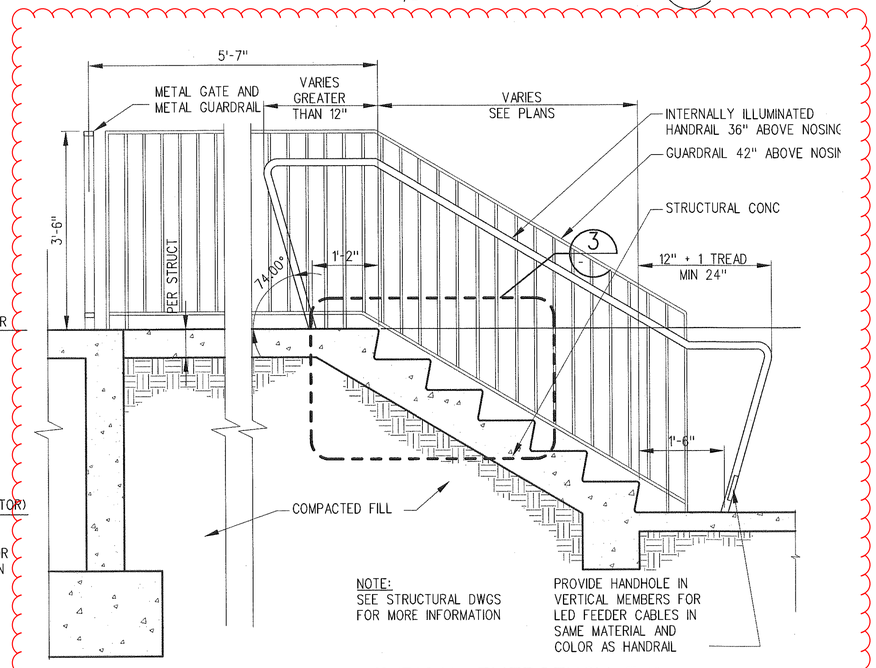

IN DRFI 10250, PM&S DRAWS AN ALTERNATE LAYOUT FOR STAIRS WITH EXPANSION JOINT, WHICH INCLUDES ONLY ONE POST AT TOP OF STAIRS.

TYPICAL EMERGENCY EXIT STAIRS & LANDING (4) A-A-631

3/4"=1'-0"

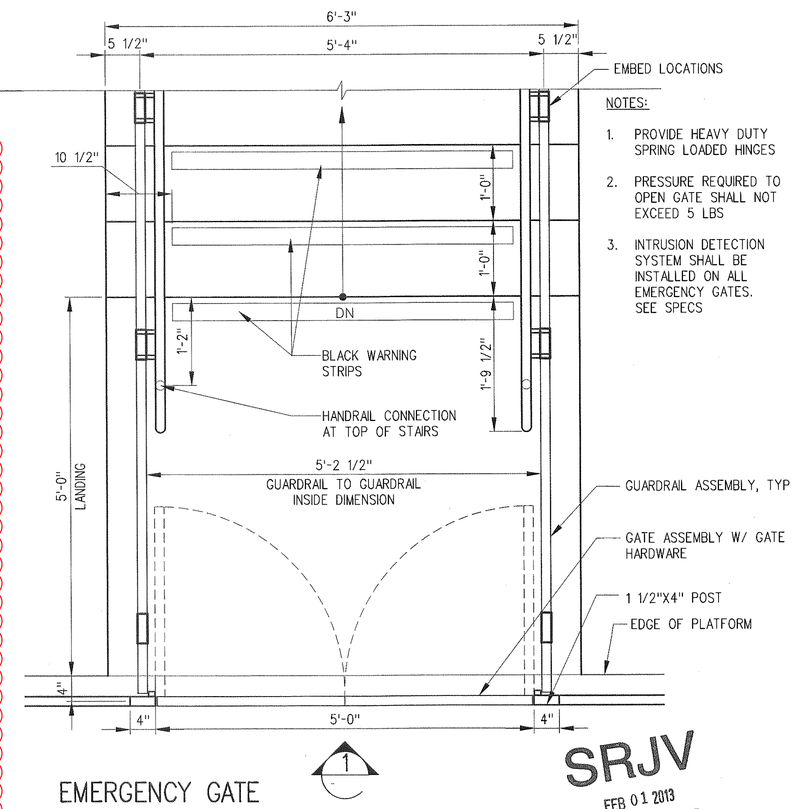

EMERGENCY GATE DETAIL PLAN (2) A-A-631

1"=1'-0"

SRJV
FEB 01 2013
ISSUED FOR CONSTRUCTION

THE PREPARATION OF THIS DRAWING HAS BEEN FINANCED BY THE TAXES OF THE CITIZENS OF LOS ANGELES COUNTY AND OF THE STATE OF CALIFORNIA.

REV	DATE	BY	APP	REG NO	EXPIRES	SEAL HOLDER	DESCRIPTION
0	1/24/13	CS	JT	C21914	8/31/13	JOHN TRAUTMANN	APPROVED FOR CONSTRUCTION

DESIGNED BY J. JACOBSEN
DRAWN BY M. KHANBABIAN
CHECKED BY C. SUERO
IN CHARGE J. TRAUTMANN
DATE 1/24/13

LICENSED ARCHITECT JOHN P. TRAUTMANN No. C21914 Exp. 08-31-13 ARCHITECTURAL STATE OF CALIFORNIA

Exposition Metro Line Construction Authority
Expo
Exposition Construction Authority Approved for Construction Drawings - AFC
JAN 31 2013
EXPO SKANSKA RADOS
444 South Flower Street
Suite 2200
Los Angeles, CA 90071
TEL (213) 443-7463
FAX (213) 362-9461
PARSONS BRINCKERHOFF
CURRENT STATUS

EXPOSITION LRT PROJECT- PHASE 2
COMMON STATION DETAILS
STAIRWAY AND EMERGENCY GATE DETAILS

CONTRACT NO XP8902-002
DRAWING NO A-A-631
REV 0
SCALE AS NOTED
SHEET NO

C:\Expo2 Sheets\Common Details\expo2-A-A-631.dwg
24-Jan-13 1:36 PM Jacobsen, John J.

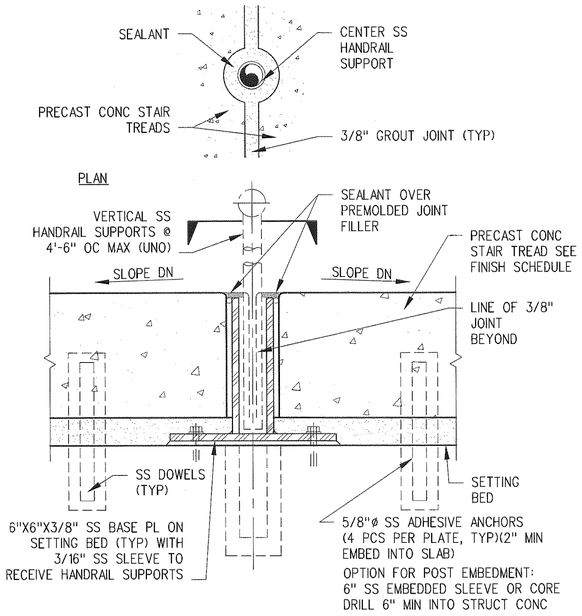

POST MOUNTING AT CENTER OF STAIR

6 A-A-632

3"=1'-0"

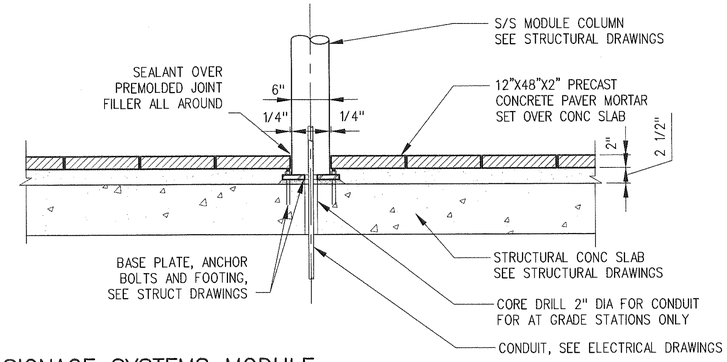

SIGNAGE SYSTEMS MODULE COLUMN DETAIL

3 A-A-632

1"=1'-0"

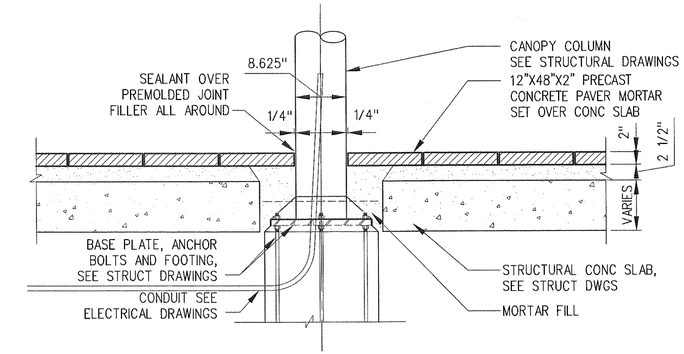

CENTER CANOPY PLATFORM POST DETAIL

1 A-A-632

1"=1'-0"

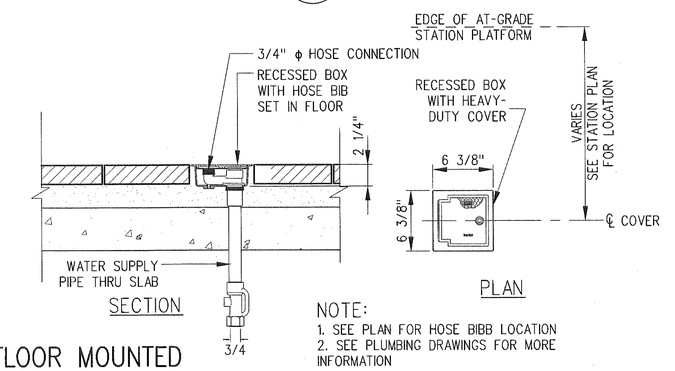

NOTE:
1. SEE PLAN FOR HOSE BIBB LOCATION
2. SEE PLUMBING DRAWINGS FOR MORE INFORMATION

FLOOR MOUNTED HOSE BIBB DETAIL

4 A-A-632

1 1/2"=1'-0"

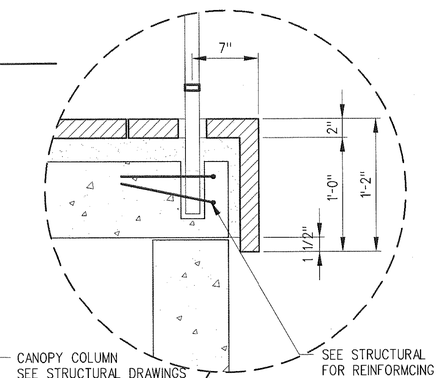

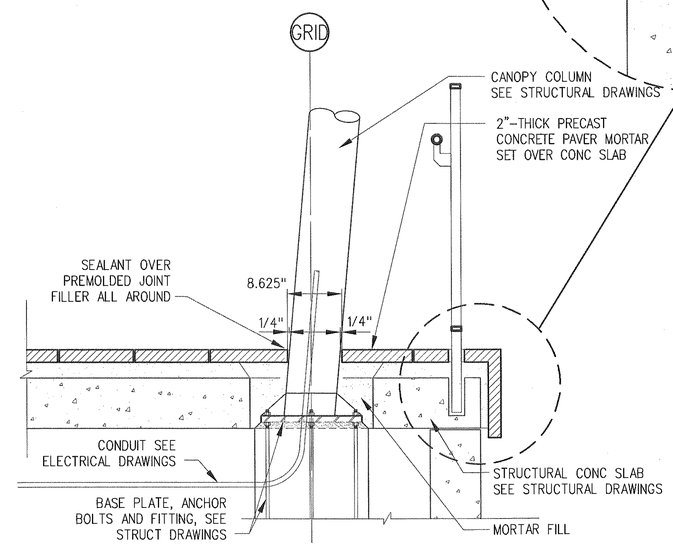

SIDE PLATFORM POST DETAIL

2 A-A-632

1"=1'-0"

NOTE:
REFER TO METRO RAIL STANDARD DETAIL 1/AS-019 FOR MORE DETAILS

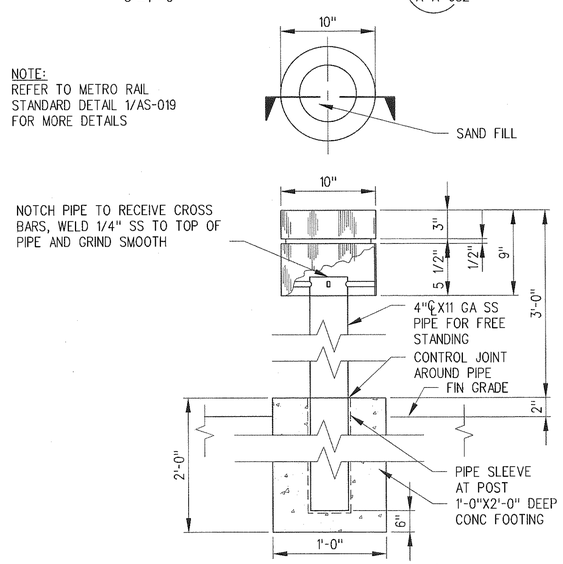

ASH RECEPTACLE

7 A-A-632

NOT TO SCALE

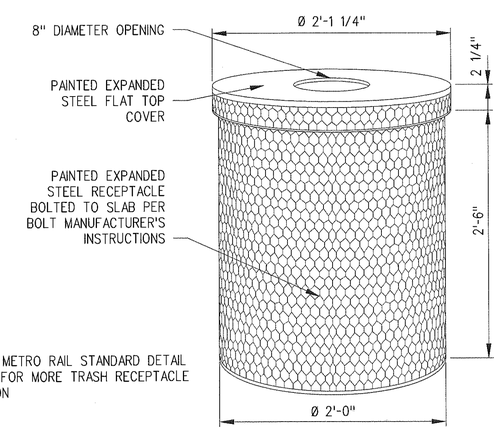

NOTE:
REFER TO METRO RAIL STANDARD DETAIL 4/AS-025 FOR MORE TRASH RECEPTACLE INFORMATION

TRASH RECEPTACLE

5 A-A-632

NO SCALE

SRJV
FEB 01 2013
ISSUED FOR CONSTRUCTION

THE PREPARATION OF THIS DRAWING HAS BEEN FINANCED BY THE TAXES OF THE CITIZENS OF LOS ANGELES COUNTY AND OF THE STATE OF CALIFORNIA.

REV	DATE	BY	APP	REG NO	EXPIRES	SEAL HOLDER	DESCRIPTION
0	1/24/13	CS	JT	C21914	8/31/13	JOHN TRAUTMANN	APPROVED FOR CONSTRUCTION

DESIGNED BY J. JACOBSEN
DRAWN BY M. KHANBABIAN
CHECKED BY C. SUERO
IN CHARGE J. TRAUTMANN
DATE 1/24/13

LICENSED ARCHITECT OF CALIFORNIA — JOHN P. TRAUTMANN — No. C21914 — Exp. 08-31-13 — ARCHITECTURAL — STATE OF CALIFORNIA

Exposition Metro Line Construction Authority
Expo
Exposition Construction Authority Approved for Construction Drawings - AFC
JAN 31 2013
EXPO SKANSKA RADOS
444 South Flower Street
Suite 2200
Los Angeles, CA 90071
TEL (213) 443-7463
FAX (213) 362-9481
PARSONS BRINCKERHOFF
CURRENT STATUS

EXPOSITION LRT PROJECT- PHASE 2
COMMON STATION DETAILS
MISC PLATFORM DETAILS

CONTRACT NO XP8902-002
DRAWING NO A-A-632
REV 0
SCALE AS NOTED
SHEET NO

C:\Expo2 Sheets\Common Details\expo2-A-A-632.dwg
24-Jan-13 2:43 PM Jacobsen, John J.

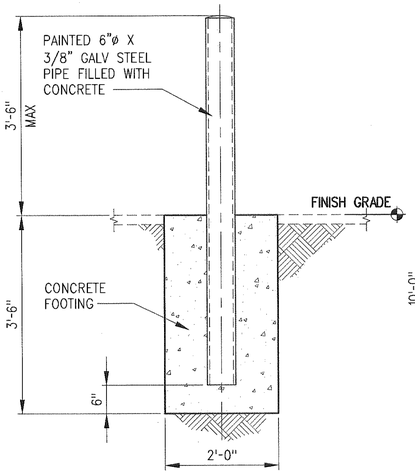

BOLLARD DETAIL (8 / A-A-636)

3/4"=1'-0"

NOTES

1. FURNISH AND INSTALL BIKE RACKS AND LOCKERS PER DRAWINGS AND SPECIFICATIONS
2. COORDINATE WITH METRO BIKE PLANNING MANAGER FOR INSTALLATION AND EXACT LOCATION AT EACH STATION
3. CONCRETE SLAB SHALL CONFORM TO THE SSPWC REQUIREMENTS FOR SIDEWALK
4. METRO TO PROVIDE INFORMATION FOR SIGNAGE AND DECALS
5. FOR EDGE AND SCORE LINES SEE STATION SITE PAVING PLAN, OUTLINE IS FOR REFERENCE ONLY

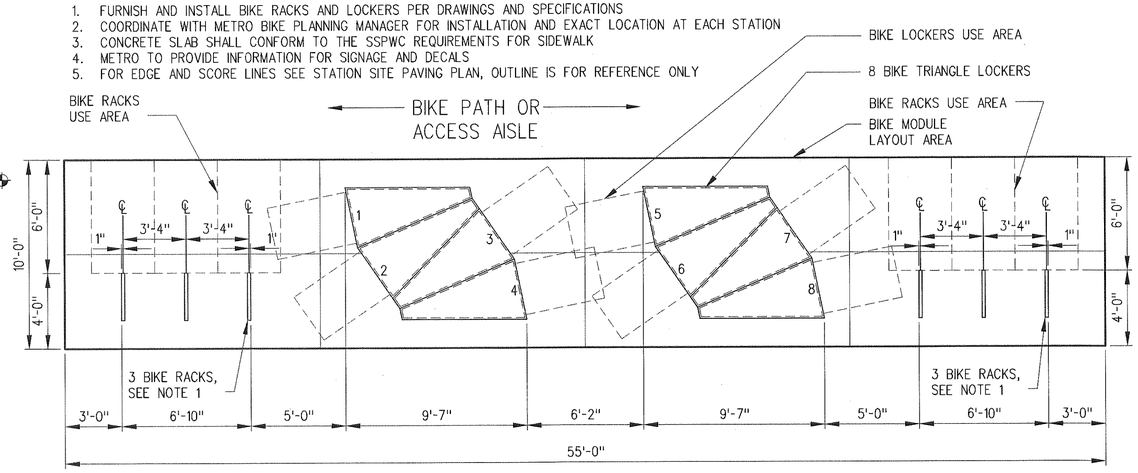

BIKE RACK MODULE "B" (2 / A-A-636)

1/4"=1'-0"

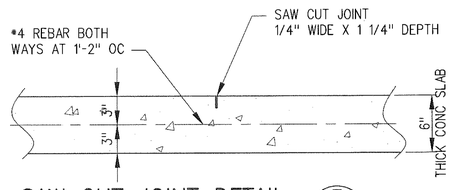

SAW CUT JOINT DETAIL (5 / A-A-636)

1 1/2"=1'-0"

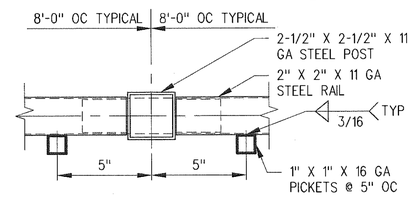

PICKET FENCE DETAIL (3 / A-A-636)

3"=1'-0"

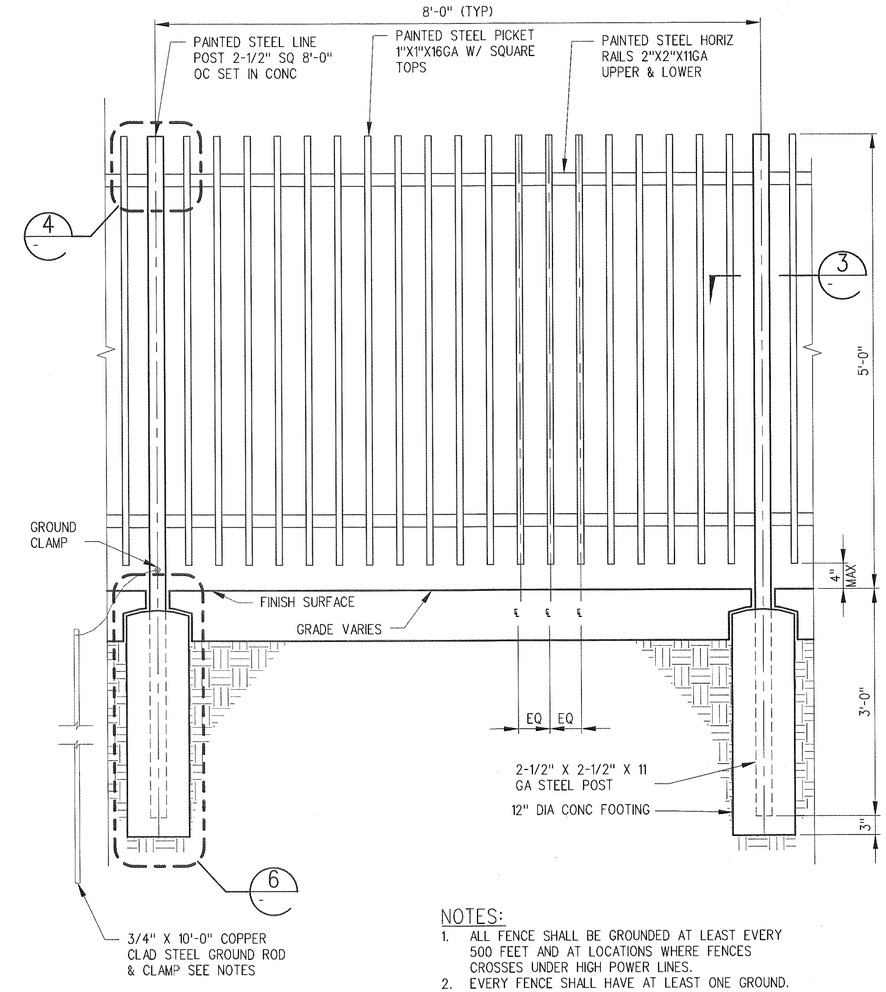

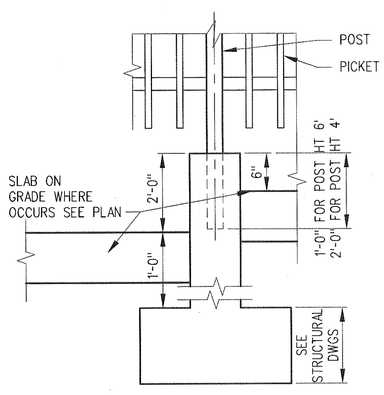

PICKET FENCE WALL FOUNDATION (7 / A-A-636)

1"=1'-0"

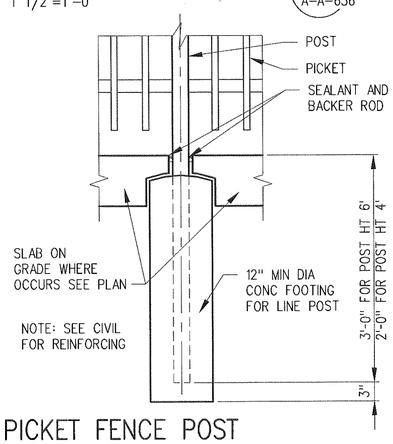

PICKET FENCE POST FOUNDATION (6 / A-A-636)

1"=1'-0"

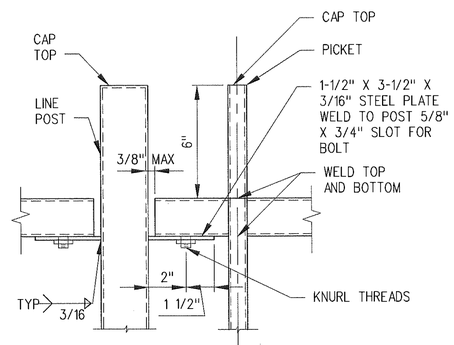

PICKET FENCE DETAIL (4 / A-A-636)

3"=1'-0"

NOTES:

1. ALL FENCE SHALL BE GROUNDED AT LEAST EVERY 500 FEET AND AT LOCATIONS WHERE FENCES CROSSES UNDER HIGH POWER LINES.
2. EVERY FENCE SHALL HAVE AT LEAST ONE GROUND.
3. ALL END POST SHALL BE GROUNDED.
4. LOCATE GROUND RODS ON THE TRACK SIDE OF FENCE.
5. SEE ELECTRICAL DRAWINGS FOR ADDITIONAL GROUNDING REQUIREMENTS.
6. ALL CONNECTIONS BETWEEN FENCING AND POSTS SHALL PROVIDE ELECTRICAL CONTINUITY.
7. A #1/0 COPPER CABLE SHALL BE CONNECTED FROM FENCE AND GATE POSTS (AS DESCRIBED ON NOTE"2") TO GROUND ROD.
8. ALL POSTS SHALL BE CAPPED AND GROUND SMOOTH.
9. GAP BETWEEN PICKETS TO BE LESS THAN 4"

TYPICAL PICKET FENCE ELEVATION (1 / A-A-636)

1"=1'-0"

SRJV
FEB 01 2013
ISSUED FOR CONSTRUCTION

THE PREPARATION OF THIS DRAWING HAS BEEN FINANCED BY THE TAXES OF THE CITIZENS OF LOS ANGELES COUNTY AND OF THE STATE OF CALIFORNIA.

REV	DATE	BY	APP	REG NO	EXPIRES	SEAL HOLDER	DESCRIPTION
0	1/24/13	CS	JT	C21914	8/31/13	JOHN TRAUTMANN	APPROVED FOR CONSTRUCTION

DESIGNED BY J. JACOBSEN
DRAWN BY M. KHANBABIAN
CHECKED BY C. SUERO
IN CHARGE J. TRAUTMANN
DATE 1/24/13

LICENSED ARCHITECT JOHN P. TRAUTMANN No. C21914 Exp. 08-31-13 ARCHITECTURAL STATE OF CALIFORNIA

Exposition Metro Line Construction Authority
Expo
Exposition Construction Authority Approved for Construction Drawings - AFC
JAN 31 2013
EXPO SKANSKA RADOS
444 South Flower Street
Suite 2200
Los Angeles, CA 90071
TEL (213) 443-7463
FAX (213) 362-9481
PARSONS BRINCKERHOFF

CURRENT STATUS

EXPOSITION LRT PROJECT- PHASE 2
COMMON STATION DETAILS
SITE DETAILS

CONTRACT NO XP8902-002
DRAWING NO A-A-636
REV 0
SCALE AS NOTED
SHEET NO

C:\Expo2 Sheets\Common Details\expo2-A-A-636.dwg
24-Jan-13 1:06 PM Jacobsen, John J.

C:\Expo2 Sheets\Common Details\expo2-A-A-640.dwg

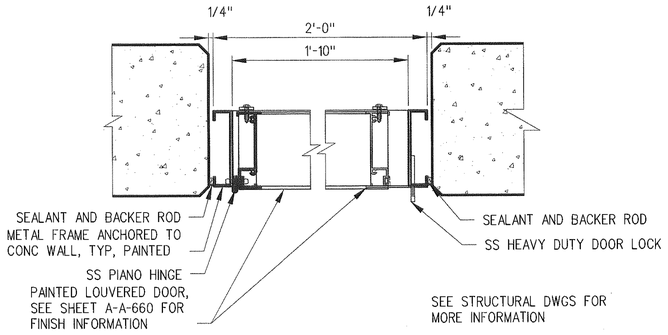

ACCESS PANEL
JAMB DETAIL
3"=1'-0"
5
A-A-640

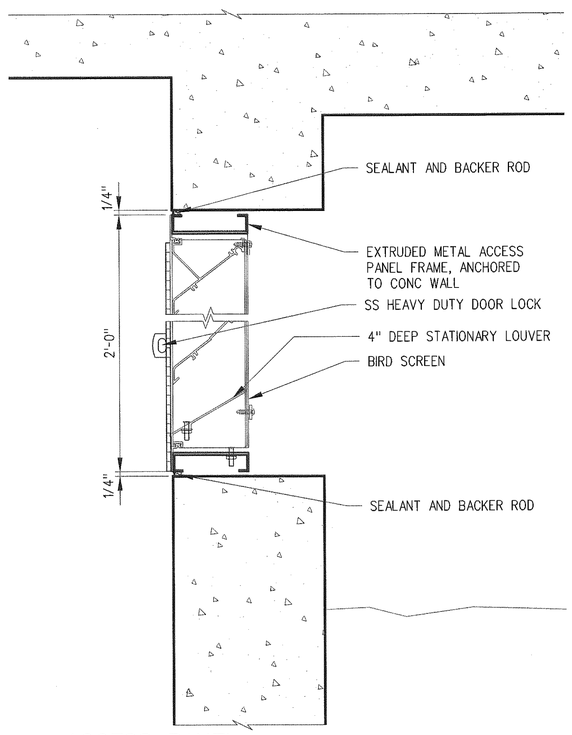

ACCESS PANEL
HEAD/SILL DETAIL
3"=1'-0"
6
A-A-640

(DRFI 10587)

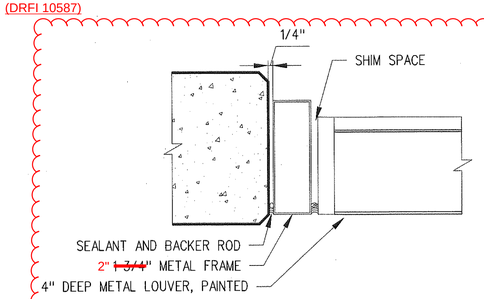

FIXED LOUVER JAMB
3"=1'-0"
3
A-A-640

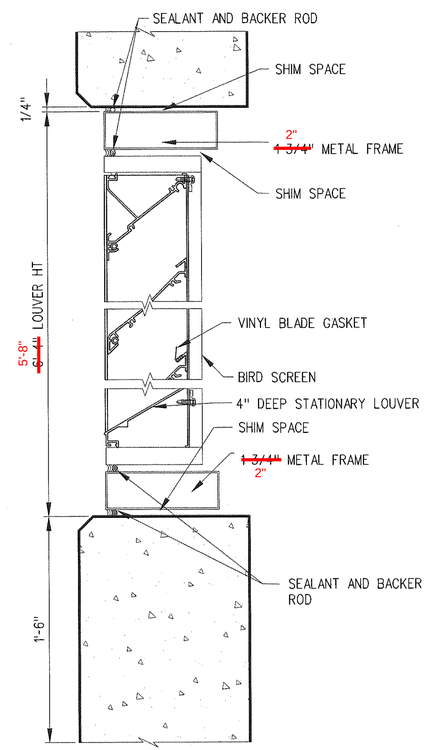

FIXED LOUVER
HEAD/SILL DETAIL
3"=1'-0"
4
A-A-640

(DRFI 10476)

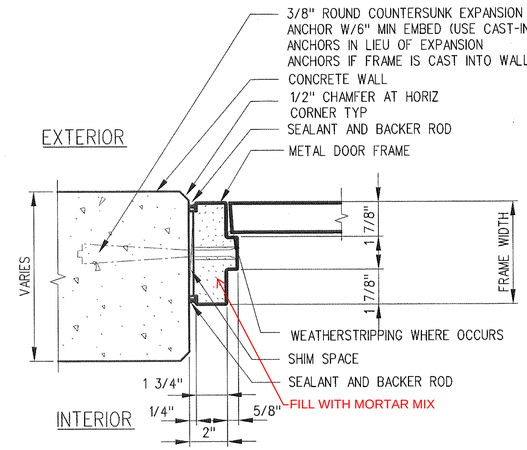

DOOR JAMB
3"=1'-0"
1
A-A-640

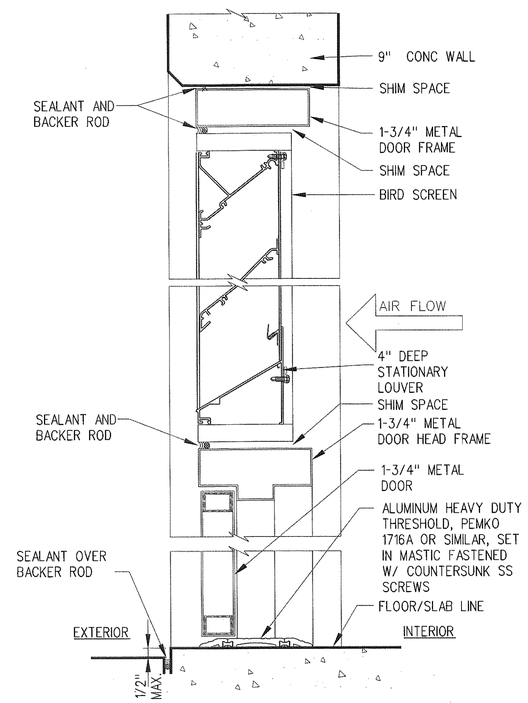

SRJV
FEB 01 2013
ISSUED FOR CONSTRUCTION

DOOR WITH LOUVER
HEAD/SILL DETAIL
3"=1'-0"
2
A-A-640

THE PREPARATION OF THIS DRAWING HAS BEEN FINANCED BY THE TAXES OF THE CITIZENS OF LOS ANGELES COUNTY AND OF THE STATE OF CALIFORNIA.

REV	DATE	BY	APP	REG NO	EXPIRES	SEAL HOLDER	DESCRIPTION
0	1/24/13	CS	JT	C21914	8/31/13	JOHN TRAUTMANN	APPROVED FOR CONSTRUCTION

DESIGNED BY J. JACOBSEN
DRAWN BY M. KHANBABIAN
CHECKED BY C. SUERO
IN CHARGE J. TRAUTMANN
DATE 1/24/13

LICENSED ARCHITECT
JOHN P. TRAUTMANN
No. C21914
Exp. 08-31-13
ARCHITECTURAL
STATE OF CALIFORNIA

Exposition Metro Line Construction Authority
Expo
Exposition Construction Authority
Approved for Construction
Drawings - AFC
JAN 31 2013

EXPO SKANSKA RADOS

444 South Flower Street
Suite 2200
Los Angeles, CA 90071
TEL (213) 443-7463
FAX (213) 362-9481

PARSONS BRINCKERHOFF

CURRENT STATUS

EXPOSITION LRT PROJECT- PHASE 2
COMMON STATION DETAILS
DOOR DETAILS

CONTRACT NO XP8902-002
DRAWING NO A-A-640
REV 0
SCALE 3" = 1'-0"
SHEET NO

Jacobsen, John J. 24-Jan-13 1:06 PM

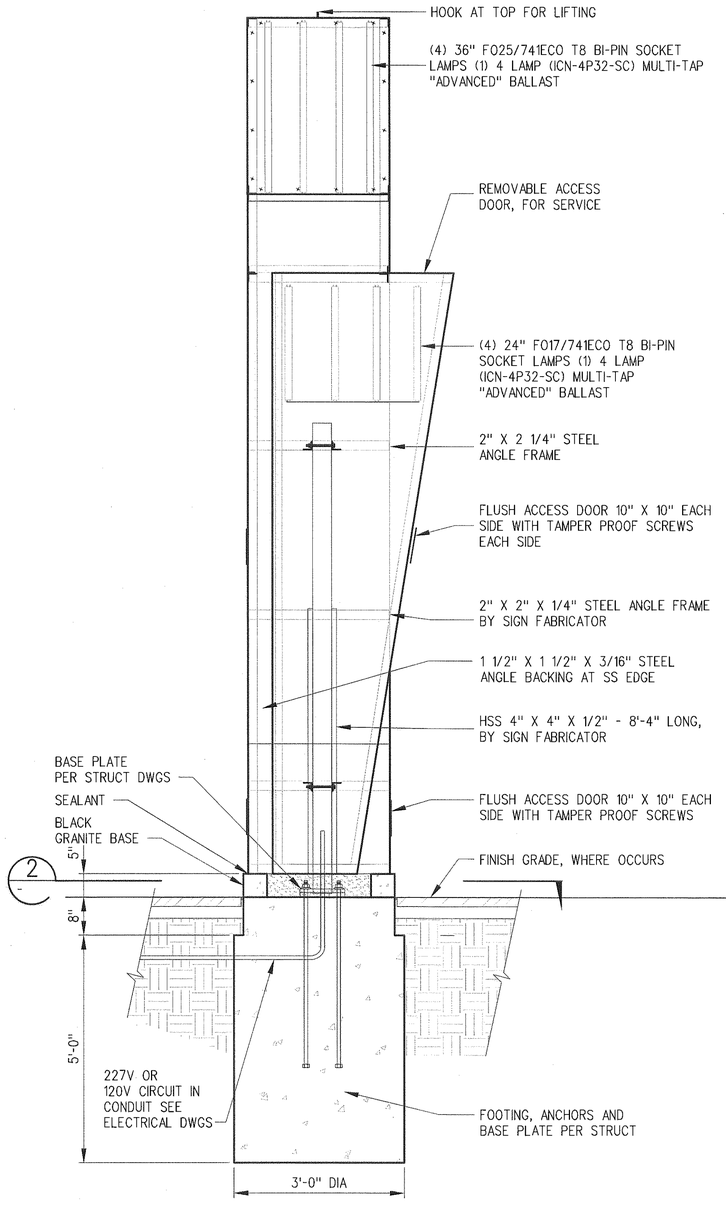

SECTION 5 A-A-650
3/4"=1'-0"

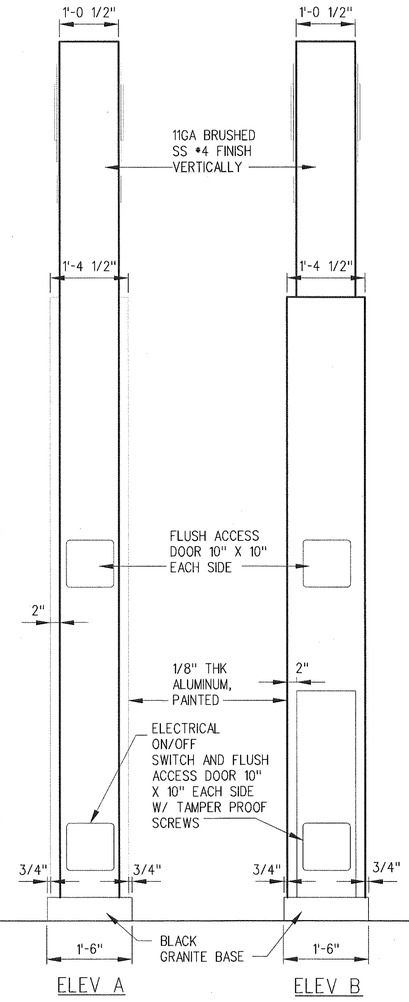

ELEV A ELEV B

SIDE ELEVATION 4 A-A-650
3/4"=1'-0"

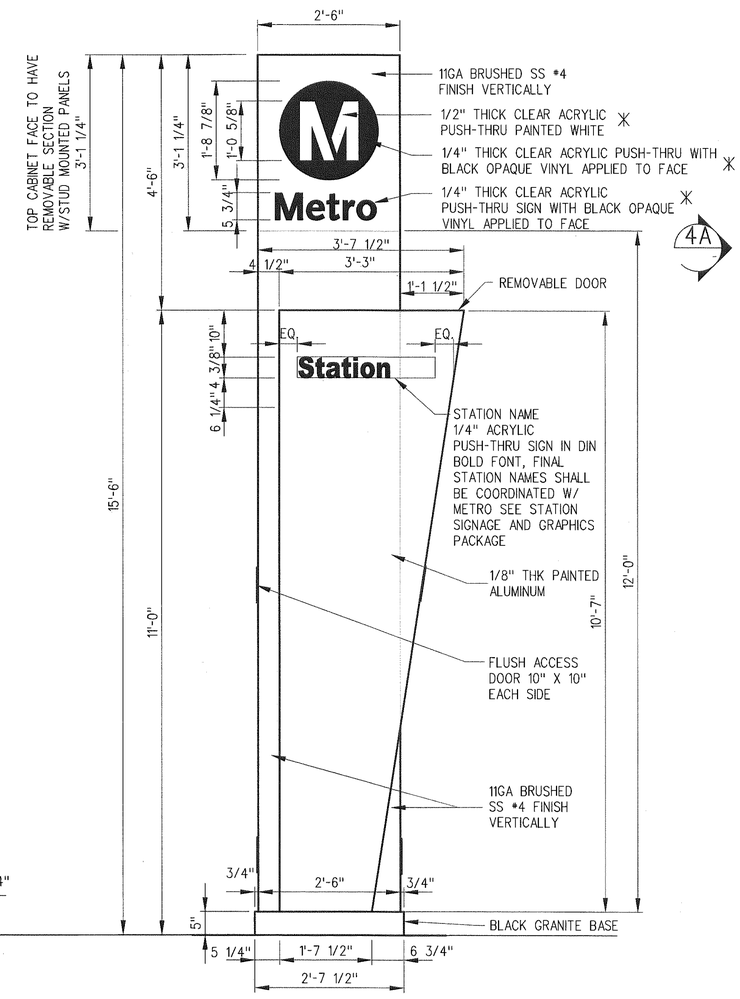

FRONT ELEVATION 3 A-A-650
3/4"=1'-0"

✳ NOTE:
FOR FINAL COLORS AND FINISHES SEE STATIONS SIGNAGE AND GRAPHICS PACKAGE

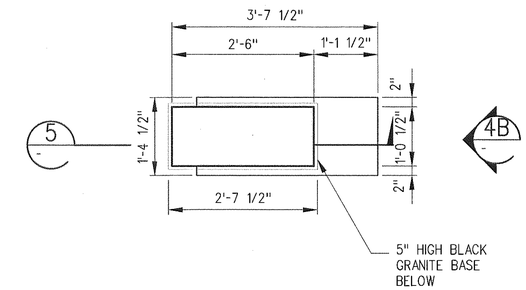

PLAN 1 A-A-650
3/4"=1'-0"

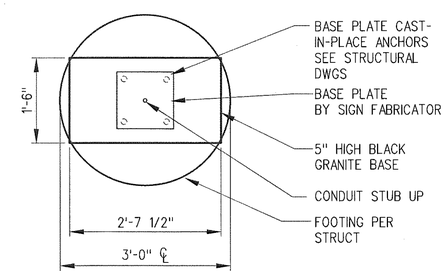

FOOTING DETAIL 2 A-A-650
3/4"=1'-0"

NOTES:
1. SEE STATION SITE PLANS FOR PYLON LOCATIONS
2. SEE STATION DWG A-A-660 FOR PYLON FINISHES
3. SEE STATION SIGNAGE PACKAGE FOR SIGNS LOCATION & DETAIL INFORMATION

SRJV
FEB 01 2013
ISSUED FOR CONSTRUCTION

THE PREPARATION OF THIS DRAWING HAS BEEN FINANCED BY THE TAXES OF THE CITIZENS OF LOS ANGELES COUNTY AND OF THE STATE OF CALIFORNIA.

REV	DATE	BY	APP	REG NO	EXPIRES	SEAL HOLDER	DESCRIPTION
0	1/24/13	CS	JT	C21914	8/31/13	JOHN TRAUTMANN	APPROVED FOR CONSTRUCTION

DESIGNED BY J. JACOBSEN
DRAWN BY M. KHANBABIAN
CHECKED BY C. SUERO
IN CHARGE J. TRAUTMANN
DATE 1/24/13

LICENSED ARCHITECT JOHN P. TRAUTMANN No. C21914 Exp. 08-31-13 ARCHITECTURAL STATE OF CALIFORNIA

Exposition Metro Line Construction Authority
Expo
Exposition Construction Authority Approved for Construction Drawings - APC
JAN 31 2013
EXPO SKANSKA RADOS
444 South Flower Street
Suite 2200
Los Angeles, CA 90071
TEL (213) 443-7463
FAX (213) 362-9481
PARSONS BRINCKERHOFF
CURRENT STATUS

EXPOSITION LRT PROJECT- PHASE 2
COMMON STATION DETAILS
METRO GRAND PYLON DETAILS

CONTRACT NO XP8902-002
DRAWING NO A-A-650
REV 0
SCALE 3/4" = 1'-0"
SHEET NO

C:\Expo2 Sheets\Common Details\expo2-A-A-650.dwg
24-Jan-13 1:06 PM Jacobsen, John J.

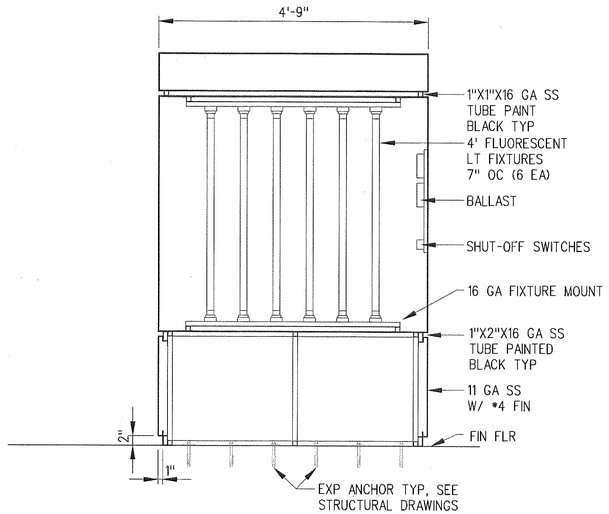

SECTION 5 A-A-651
3/4"=1'-0"

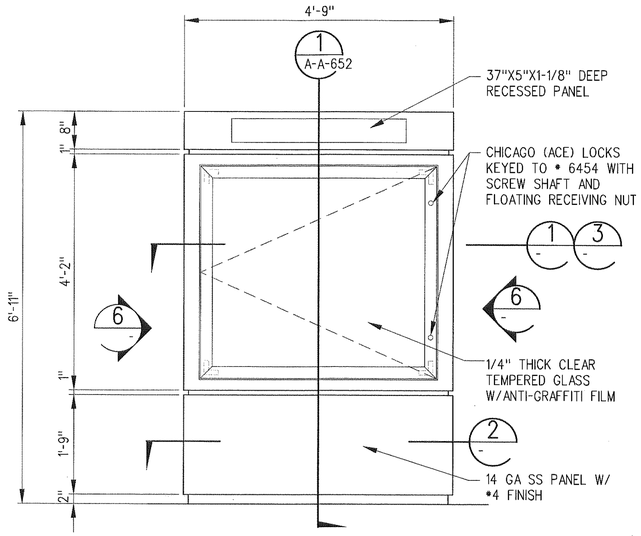

FRONT ELEVATION 4 A-A-651
3/4"=1'-0"

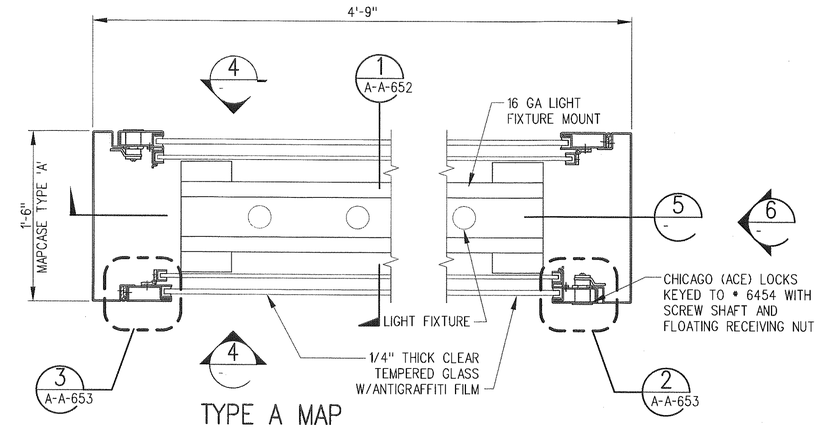

TYPE A MAP CASE SECTION 1 A-A-651
1 1/2"=1'-0"

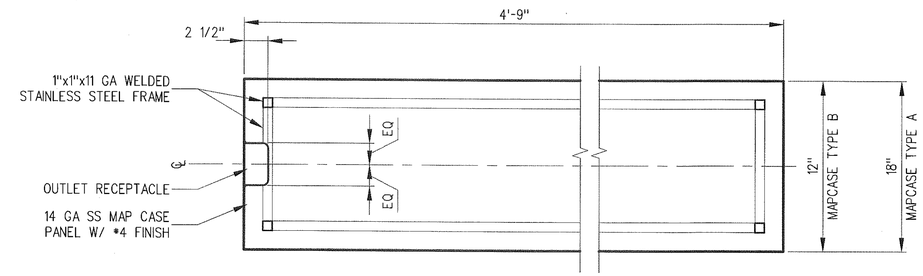

MAP CASE SECTION 2 A-A-651
1 1/2"=1'-0"

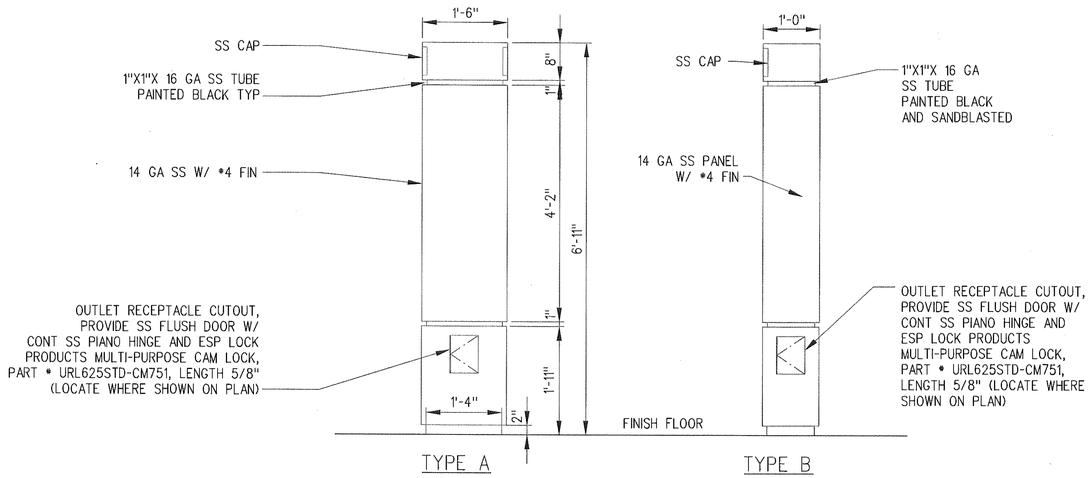

SIDE ELEVATIONS 6 A-A-651
3/4"=1'-0"

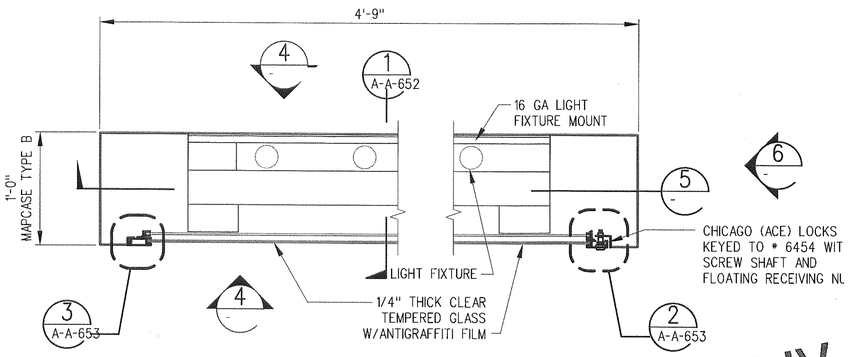

TYPE B MAP CASE SECTION 3 A-A-651
1 1/2"=1'-0"

SRJV
FEB 01 2013
ISSUED FOR CONSTRUCTION

THE PREPARATION OF THIS DRAWING HAS BEEN FINANCED BY THE TAXES OF THE CITIZENS OF LOS ANGELES COUNTY AND OF THE STATE OF CALIFORNIA.

REV	DATE	BY	APP	REG NO	EXPIRES	SEAL HOLDER	DESCRIPTION
0	1/24/13	CS	JT	C21914	8/31/13	JOHN TRAUTMANN	APPROVED FOR CONSTRUCTION

DESIGNED BY J. JACOBSEN
DRAWN BY M. KHANBABIAN
CHECKED BY C. SUERO
IN CHARGE J. TRAUTMANN
DATE 1/24/13

LICENSED ARCHITECT JOHN P. TRAUTMANN No. C21914 Exp. 08-31-13 ARCHITECTURAL STATE OF CALIFORNIA

Exposition Metro Line Construction Authority
Expo
Exposition Construction Authority Approved for Construction Drawings - AFC
JAN 31 2013
EXPO SKANSKA RADOS
444 South Flower Street
Suite 2200
Los Angeles, CA 90071
TEL (213) 443-7463
FAX (213) 362-9481
PARSONS BRINCKERHOFF
CURRENT STATUS

EXPOSITION LRT PROJECT- PHASE 2
COMMON STATION DETAILS
MAP CASE DETAILS
SHEET 1 OF 3

CONTRACT NO XP8902-002
DRAWING NO A-A-651
REV 0
SCALE AS NOTED
SHEET NO

C:\Expo2 Sheets\Common Details\expo2-A-A-651.dwg
Jacobsen, John J. 1:36 PM 24-Jan-13

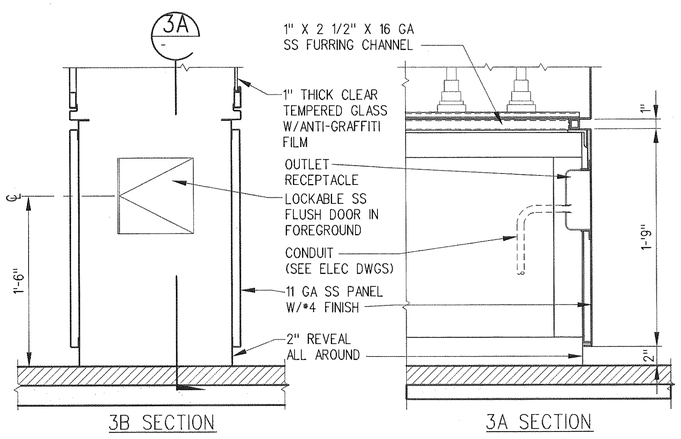

MAP CASE SECTIONS

1 1/2"=1'-0"

3 / A-A-652

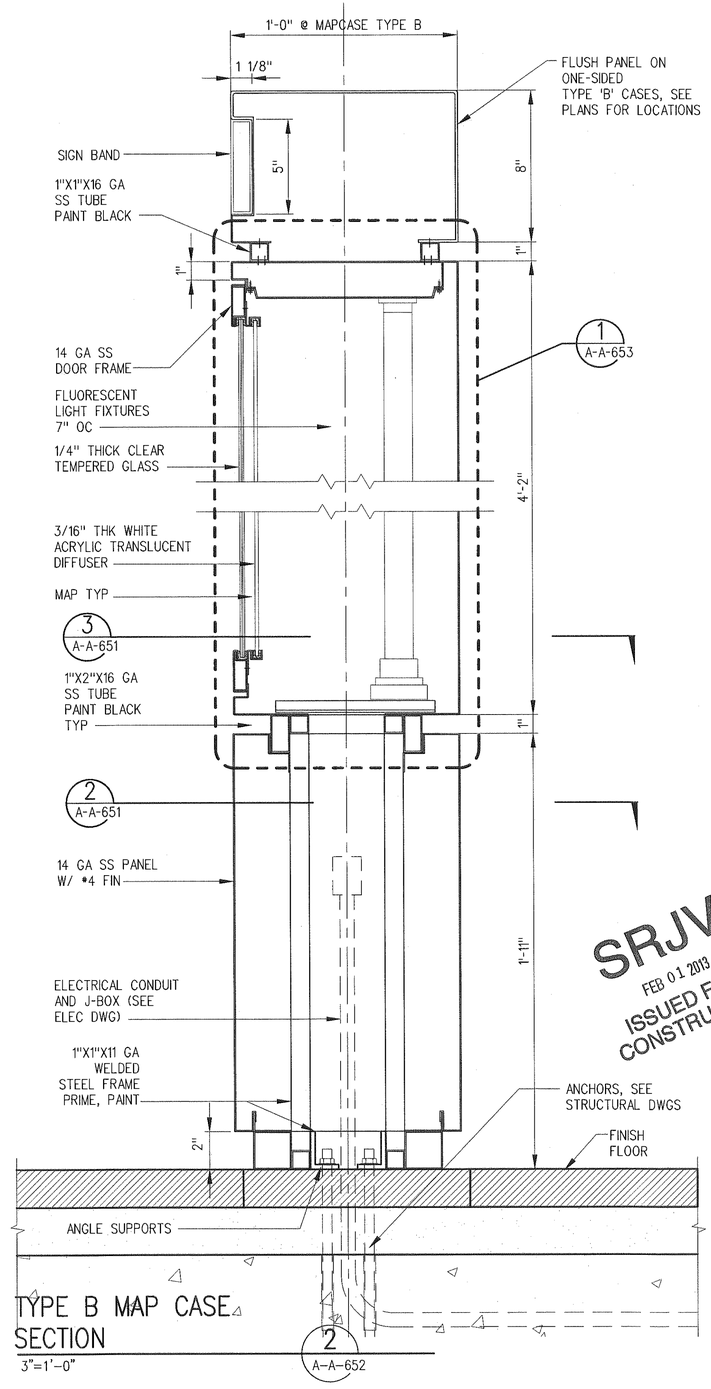

TYPE B MAP CASE SECTION

3"=1'-0"

2 / A-A-652

SRJV
FEB 01 2013
ISSUED FOR CONSTRUCTION

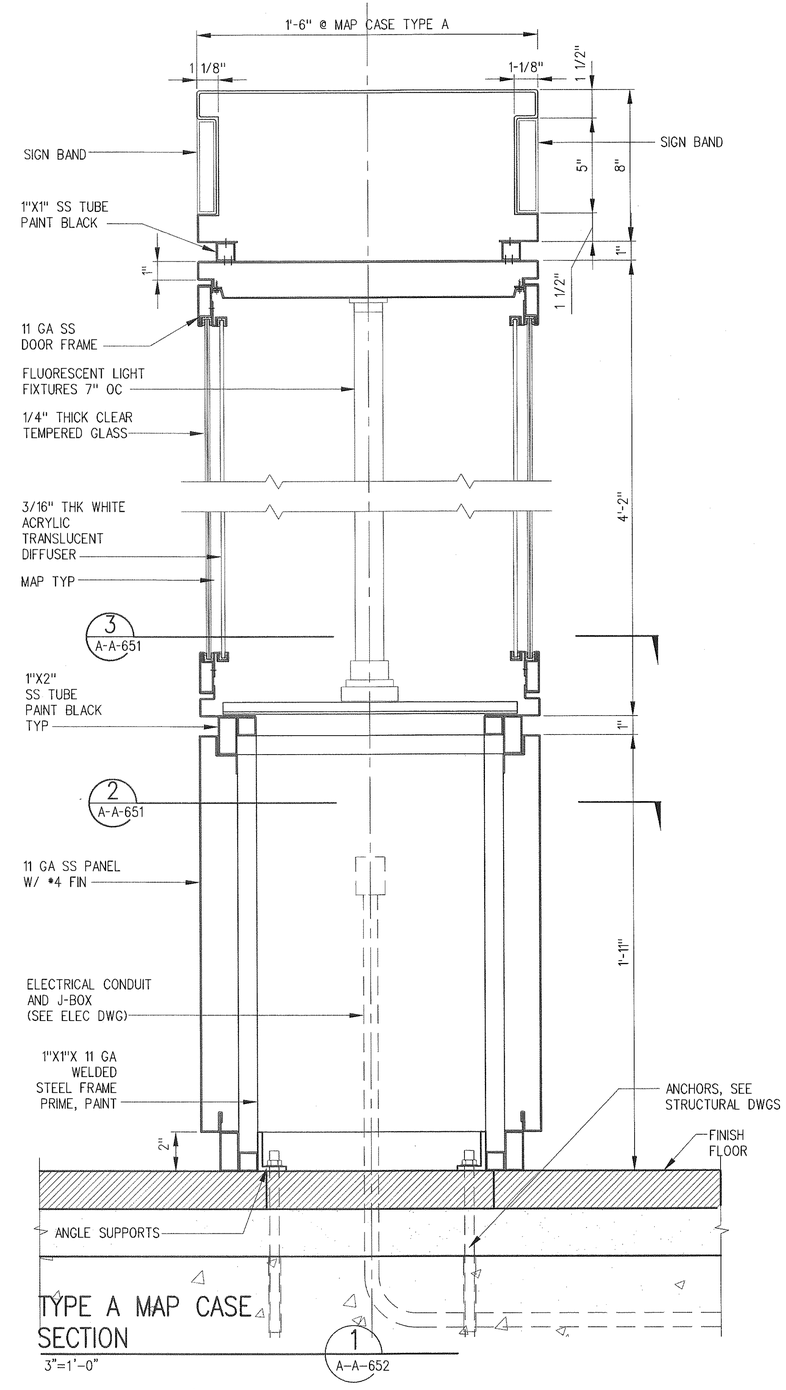

TYPE A MAP CASE SECTION

3"=1'-0"

1 / A-A-652

THE PREPARATION OF THIS DRAWING HAS BEEN FINANCED BY THE TAXES OF THE CITIZENS OF LOS ANGELES COUNTY AND OF THE STATE OF CALIFORNIA.

REV	DATE	BY	APP	REG NO	EXPIRES	SEAL HOLDER	DESCRIPTION
0	1/24/13	CS	JT	C21914	8/31/13	JOHN TRAUTMANN	APPROVED FOR CONSTRUCTION

DESIGNED BY J. JACOBSEN
DRAWN BY M. KHANBABIAN
CHECKED BY C. SUERO
IN CHARGE J. TRAUTMANN
DATE 1/24/13

LICENSED ARCHITECT
JOHN P. TRAUTMANN
No. C21914
Exp. 08-31-13
ARCHITECTURAL
STATE OF CALIFORNIA

Exposition Metro Line Construction Authority
Expo

Exposition Construction Authority
Approved for Construction
Drawings - AFC
JAN 31 2013

EXPO SKANSKA RADOS

444 South Flower Street
Suite 2200
Los Angeles, CA 90071
TEL (213) 443-7463
FAX (213) 362-9481

PARSONS BRINCKERHOFF

CURRENT STATUS

EXPOSITION LRT PROJECT- PHASE 2
COMMON STATION DETAILS
MAP CASE DETAILS
SHEET 2 OF 3

CONTRACT NO XP8902-002
DRAWING NO A-A-652
REV 0
SCALE AS NOTED
SHEET NO

C:\Expo2 Sheets\Common Details\expo2-A-A-652.dwg
24-Jan-13
1:06 PM
Jacobsen, John J.

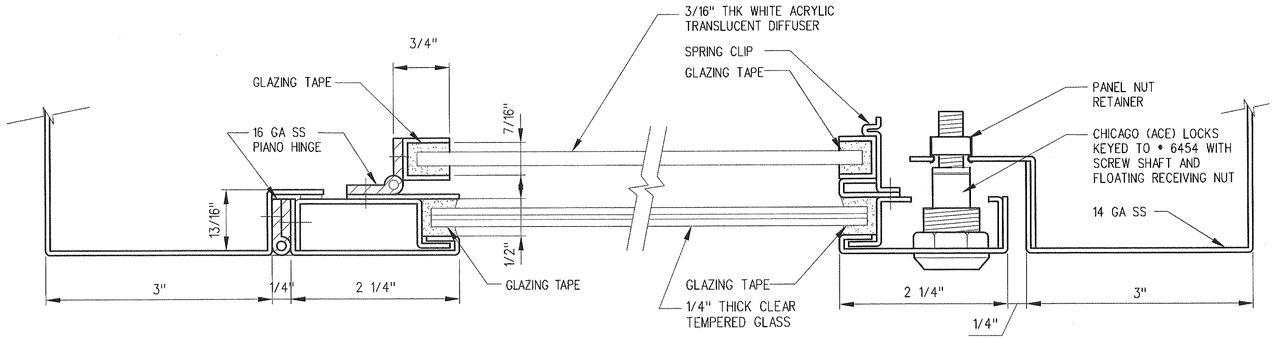

PLAN DETAIL 3 A-A-653
12"=1'-0"

PLAN DETAIL 2 A-A-653
12"=1'-0"

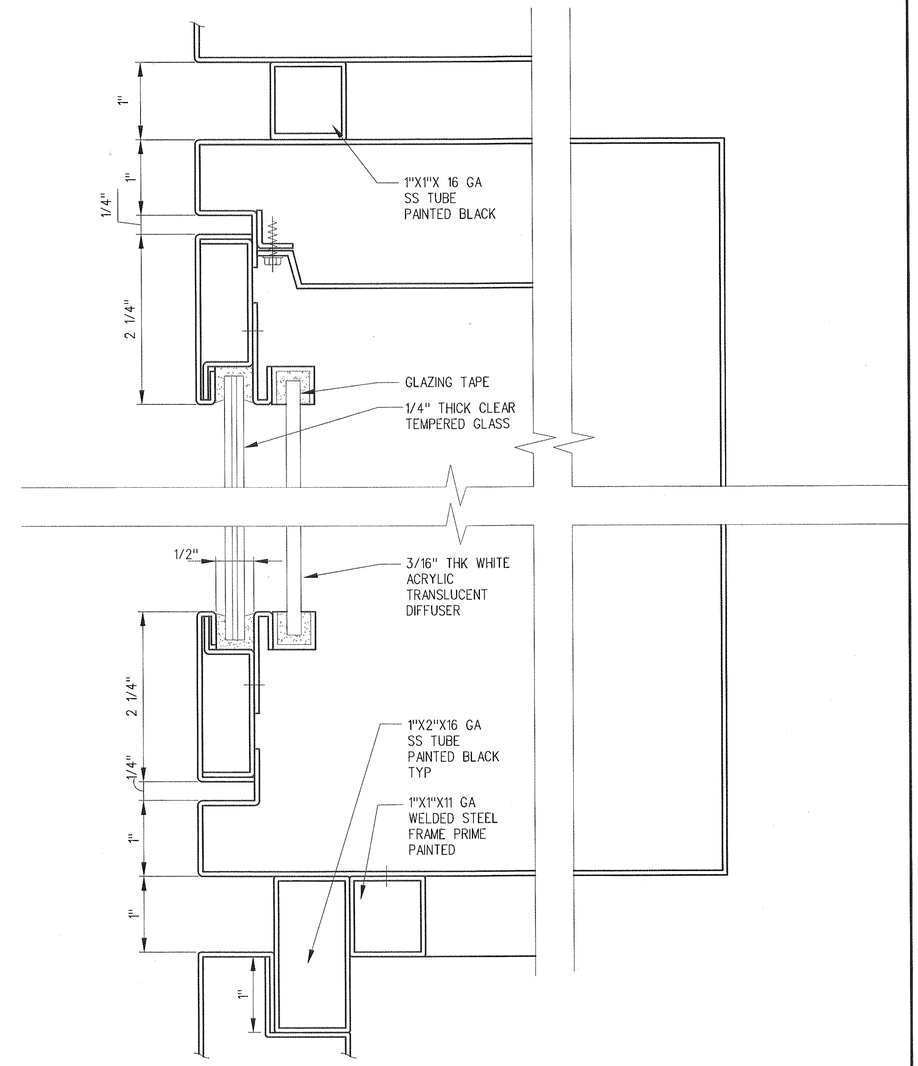

SECTION DETAIL 1 A-A-653
12"=1'-0"

SRJV
FEB 01 2013
ISSUED FOR CONSTRUCTION

THE PREPARATION OF THIS DRAWING HAS BEEN FINANCED BY THE TAXES OF THE CITIZENS OF LOS ANGELES COUNTY AND OF THE STATE OF CALIFORNIA.

REV	DATE	BY	APP	REG NO	EXPIRES	SEAL HOLDER	DESCRIPTION
0	1/24/13	CS	JT	C21914	8/31/13	JOHN TRAUTMANN	APPROVED FOR CONSTRUCTION

DESIGNED BY J. JACOBSEN
DRAWN BY M. KHANBABIAN
CHECKED BY C. SUERO
IN CHARGE J. TRAUTMANN
DATE 1/24/13

LICENSED ARCHITECT JOHN P. TRAUTMANN No. C21914 Exp. 08-31-13 ARCHITECTURAL STATE OF CALIFORNIA

Exposition Metro Line Construction Authority
Expo
Exposition Construction Authority Approved for Construction Drawings - AFC
JAN 31 2013
PARSONS BRINCKERHOFF
EXPO SKANSKA RADOS
444 South Flower Street
Suite 2200
Los Angeles, CA 90071
TEL (213) 443-7463
FAX (213) 362-9481
CURRENT STATUS

EXPOSITION LRT PROJECT- PHASE 2
COMMON STATION DETAILS
MAP CASE DETAILS
SHEET 3 OF 3

CONTRACT NO XP8902-002
DRAWING NO A-A-653
REV 0
SCALE 12" = 1'-0"
SHEET NO

C:\Expo2 Sheets\Common Details\expo2-A-A-653.dwg
Jacobsen, John J. 1:06 PM 24-Jan-13

1. SIZE: 18" DIA X 83 1/2" HEIGHT
2. MATERIAL: STAINLESS STEEL #4 SATIN FINISH AT EXTERIOR
3. PHONE MOUNT (WITH FLUSH PANEL APPEARANCE): THIS PRODUCT IS CONFIGURED WITH A BUILT-IN PANEL ADAPTER FOR FLUSH PANEL APPEARANCE USING THE BELL 1C2 BOX SET COIN PHONE, MOUNTED AT 54" COIN SLOT HEIGHT. (PHONE INSTRUMENT SUPPLIED AND INSTALLED BY TELEPHONE COMPANY)
4. SIGNING: OPTIONAL ILLUMINATED HEADER SIGNING
5. LIGHTING: CONCEALED CIRCLINE FLUORESCENT
6. MOUNTING: CONCEALED BASE MOUNT TO FLOOR
7. SERVICE ENTRY: THROUGH BASE (ELECTRIC AND TELEPHONE)
8. TELEPHONE, PTEL, ETEL SHALL COMPLY WITH TITLE 24 AND ADA.

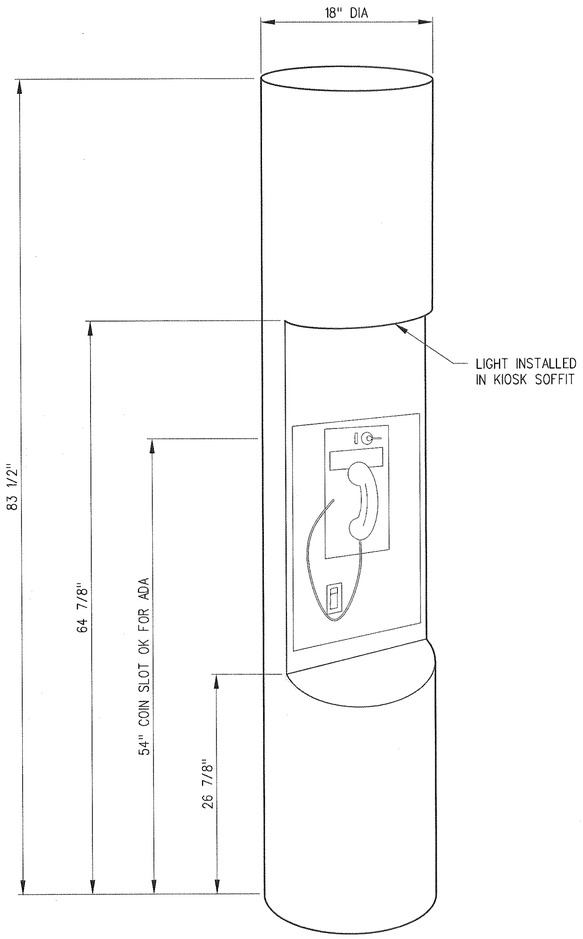

TELEPHONE KIOSK ELEVATION

NO SCALE — 5 / A-A-654

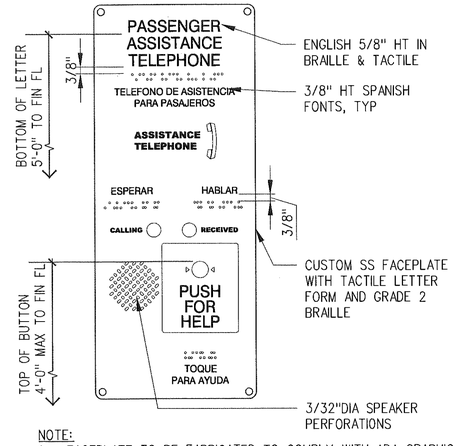

NOTE:
1. FACEPLATE TO BE FABRICATED TO COMPLY WITH ADA GRAPHIC REQUIREMENTS. TEXT AND LAYOUT FOR INFORMATION ONLY, EXACT TEXT TO BE REVIEWED AND APPROVED BY METRO CREATIVE SERVICES.
2. GRIND ALL WELDS SMOOTH.
3. FACEPLATE SHOWN AS EXAMPLE ONLY, CONTACT METRO ADA OFFICER FOR CURRENT ADAAG AND TITLE 24 REQUIREMENTS.
4. FOR EMERGENCY TELEPHONE (ETEL) CHANGE THE TEXT AND BRAILLE FROM "PASSENGER ASSISTANCE TELEPHONE" TO "EMERGENCY TELEPHONE"
8. TELEPHONE, PTEL, ETEL SHALL COMPLY WITH TITLE 24 AND ADA.

PTEL, ETEL ELEVATION

3"=1'-0" — 3 / A-A-654

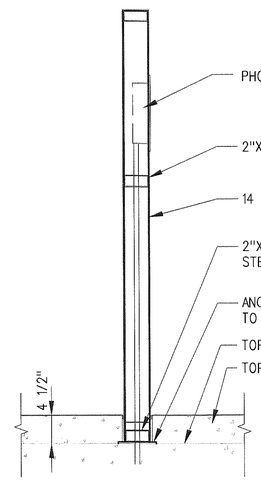

SECTION

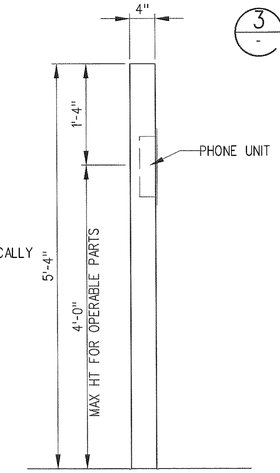

ELEVATION B

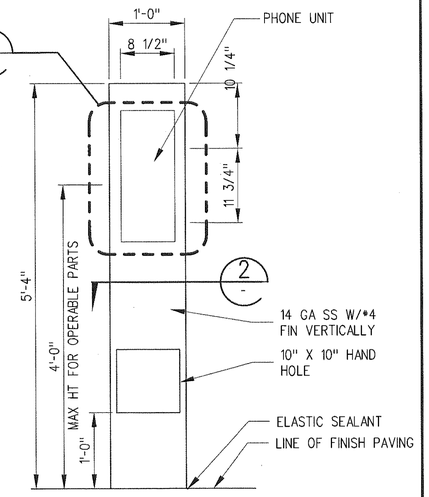

ELEVATION A

PTEL, ETEL W/ METAL PEDESTAL ELEVATIONS

1"=1'-0" — 1 / A-A-654

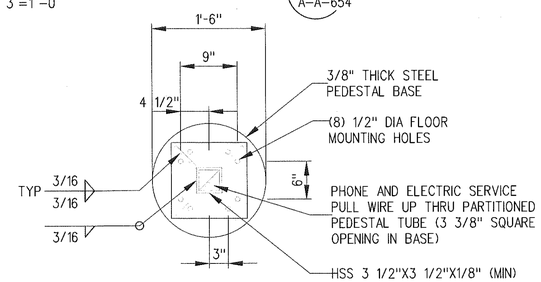

PLAN A

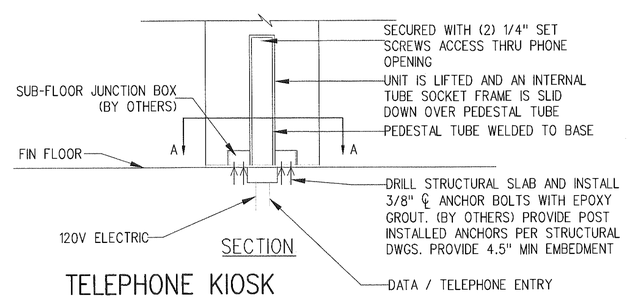

SECTION

TELEPHONE KIOSK DETAILS

1"=1'-0" — 4 / A-A-654

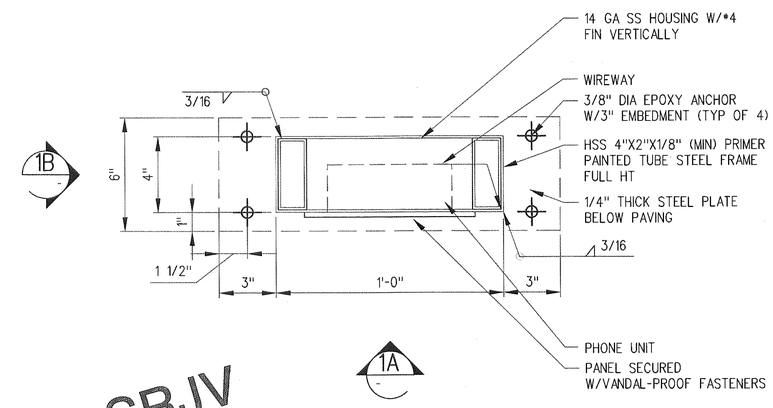

SRJV
FEB 01 2013
ISSUED FOR CONSTRUCTION

PTEL PEDESTAL PLAN

3"=1'-0" — 2 / A-A-654

THE PREPARATION OF THIS DRAWING HAS BEEN FINANCED BY THE TAXES OF THE CITIZENS OF LOS ANGELES COUNTY AND OF THE STATE OF CALIFORNIA.

REV	DATE	BY	APP	REG NO	EXPIRES	SEAL HOLDER	DESCRIPTION
0	1/24/13	CS	JT	C21914	8/31/13	JOHN TRAUTMANN	APPROVED FOR CONSTRUCTION

DESIGNED BY J. JACOBSEN
DRAWN BY M. KHANBABIAN
CHECKED BY C. SUERO
IN CHARGE J. TRAUTMANN
DATE 1/24/13

LICENSED ARCHITECT — JOHN P. TRAUTMANN — No. C21914 — Exp. 08-31-13 — ARCHITECTURAL — STATE OF CALIFORNIA

Exposition Metro Line Construction Authority
Expo
Exposition Construction Authority Approved for Construction Drawings - AFC
JAN 31 2013
EXPO SKANSKA RADOS
444 South Flower Street
Suite 2200
Los Angeles, CA 90071
TEL (213) 443-7463
FAX (213) 362-9481
PARSONS BRINCKERHOFF
CURRENT STATUS

EXPOSITION LRT PROJECT- PHASE 2
COMMON STATION DETAILS
TELEPHONE AND PTEL DETAILS

CONTRACT NO XP8902-002
DRAWING NO A-A-654
REV 0
SCALE AS NOTED
SHEET NO

C:\Expo2 Sheets\Common Details\expo2-A-A-654.dwg
24-Jan-13 1:36 PM Jacobsen, John J.

MATERIAL AND FINISH SCHEDULE (CONT)

ITEM	MATERIAL	FINISH	GRAFFITI COATINGS PERMANENT	GRAFFITI COATINGS SACRIFICIAL	REMARKS
EMERGENCY SWING GATES	S	P-BG2			
PICKET FENCE	S	P-BG2			
BLUE LIGHT STATION (NIC)					PER MANUFACTURER
BLUE LIGHT SUPPORT	S	P-BG2			
BIKE RACK	SS	–			
BIKE LOCKER	SS				PER SPECS
BOLLARD	S	P-BG2			
ELEVATOR CURTAIN WALL	AL	AN-CL		X	SACRIFICIAL COATING ON GLASS ONLY
ELEVATOR FRAMING	S	P-BG2			
ELEVATOR DOORS	SS	#4		X	SACRIFICIAL COATING ON GLASS ONLY
ELEVATOR CAB	SS	#4		X	SACRIFICIAL COATING ON INSIDE GLASS ONLY
EMERGENCY MANAGEMENT PANEL EMP (NIC)	SS	#4			
SWING GATE	S	P-BG2			
ACCESS GATE	S	P-BG2			
CHAINLINK GATE AND FENCE	S	GALV			
DOOR AND FRAME	S	P-G			
SPEAKERS		WHITE			PURCHASED UNDER METRO'S IDIQ PROGRAM

MATERIAL AND FINISH SCHEDULE

ITEM	MATERIAL	FINISH	GRAFFITI COATINGS PERMANENT	GRAFFITI COATINGS SACRIFICIAL	REMARKS
GATEWAY ARCH	S	P-BG5			
GATEWAY ARCH CONNECTORS	S	P-BG5			
GUARDRAIL MEMBERS 5/8" x1-1/2"	S	P-BG2			
GUARDRAIL PICKETS 1/2" X 1-1/2"	S	P-BG2			
HANDRAIL	SS	#4			
HANDRAIL SUPPORTS	S	P-BG2			
CANOPY SHADE PANEL	SS	EC			RIMEX: GREEN GRANEX
CANOPY FRAME	S	P-BG2			
CANOPY COLUMNS/POST	S	P-BG5			
CANOPY OUTRIGGER	S	P-BG5			
POSTS/COLUMNS	S	P-BG5			FOR VMS AND SIGNAGE SYSTEM MODULES ONLY
TICKET AREA POST/COLUMNS	S	P-BG5			
RAIN CANOPY	AL	–			CUSOM PERFORATION PATTERN ON SOFFIT PANELS
EMERGENCY GATE POST 1-1/2" x 4"	S	P-BG2			
EMERGENCY GATE MEMBERS 1" x 1-1/2"	S	P-BG2			
CAST IN PLACE PAVING	AC	BR			
CAST IN PLACE FLOORS	CP	SC			
TRUNCATED DOME PAVERS	PC	I-Y			SEALED BY MANUFACTURER
PRE-WARNING STRIP PAVERS	PC	I-B			SEALED BY MANUFACTURER
PLATFORM PAVERS	PC	I-G1			SEALED BY MANUFACTURER
SPECIALTY PAVERS	PC	I-G1			–
SLOPED WALKWAY FLOORING	PC	I-G1			SEALED BY MANUFACTURER
RAMP FLOORING	PC	I-G1			SEALED BY MANUFACTURER
EMERGENCY STAIR	CP	BR			
STAIR & LANDING	PC	I-G1			
PEDESTRIAN CROSSING	DU	–			–
PLATFORM LIGHTING FIXTURES	M	PWC			MOUNTED ON SIGNAGE/SYSTEMS MODULE. POWDERCOATED COLOR TO MATCH P-BG2
BALANCE BENCH FRAME	AL	PWC/P-M			CAST ALUMINUM FRAME BRIGHT SILVER PWC
BALANCE BENCH SEAT/BACKREST	SS	SANDSTONE			
MAP CASE	SS	#4		X	SACRIFICIAL COATING ON GLASS ONLY
METRO GRAND PYLON	SS/AL/GR				
TVM (NIC)	SS	#4			METRO PROVIDED AND INSTALLED
SAV (NIC)	SS	#4			METRO PROVIDED AND INSTALLED
TRASH RECEPTACLE	S	P-G			
ASH RECEPTACLE	SS	#4			
CAST-IN-PLACE WALLS	AC	U	X		SIGNAL/COMM BLDG
LOUVER	AL	PWC/P-G			SIGNAL/COMM BLDG – MATCH CONTROL SAMPLE ROTUNDA STONE
PTEL/ETEL	SS	#4			
ART PANEL					EXPO PROVIDED CONTRACTOR INSTALLED
PAY TELEPHONE	SS	#4			ENCLOSURE CONTRACTOR FURNISHED AND INSTALLED ACTUAL PHONE BY OTHERS
FLOOR LIGHTS	SS				
DOWNSPOUT	S	P-BG5			
GUTTER	AL	–			FINISH TO MATCH RAIN CANOPY PANELS
HOSE BIBB	BRONZE	U			
ACCESS PANEL AND FRAME	S	P-G			
CCTV	S	PWC			
VMS FRAME		BLACK			PURCHASED UNDER METRO'S IDIQ PROGRAM
VMS ATTACHMENT TO POST	S	P-BG5			
OCS CANOPY POLE	S	P-BG5			

LEGEND

MATERIAL LEGEND:

- AL ALUMINUM
- AC ARCHITECTURAL CONCRETE
- ACM ALUMINUM COMPOSITE MATERIAL
- C CMU BLOCK
- CP CAST IN PLACE CONCRETE
- DU DURATHERM
- GR GRANITE
- M METAL
- PC PRECAST CONCRETE
- S STEEL
- SS STAINLESS STEEL

FINISH LEGEND:

- AN ANODIZED
- B BRUSHED
- BR MEDIUM BROOM FINISH
- CL CLEAR
- EC ELECTROCHEMICAL COATING
- G GREEN-FRAZEE CL 2057N
- GALV GALVANIZED
- H HONED
- I-B INTEGRAL COLOR BLACK
- I-G1 INTEGRAL COLOR TO MATCH STEPSTONE PORCELAIN 1813
- I-Y INTEGRAL COLOR SAFETY YELLOW WITH TUDOR FINISH AS PER ADA REQUIREMENTS
- LG LIGHT GREY
- P PLASTISOL GREY
- P-G PAINT-GREY AKZO NOBEL-1220874
- P-R PAINT-RED
- P-BG1 NOT USED
- P-BG2 FRAZEE-8503M
- P-BG3 NOT USED
- P-BG4 NOT USED
- P-BG5 FRAZEE-8505D
- P-M METALLIC PAINT
- PWC POWDER COATED
- SC SEALED CONCRETE
- TBD TO BE DETERMINED
- U UNFINISHED
- Z ZINC PRIMER

SRJV
JAN 31 2014
ISSUED FOR CONSTRUCTION

C:\projectwise\pblprojectwiseintl\jacobseinj\dms09996\expo2-A-A-660.dwg

22-Jan-14 3:16 PM Jay Jacobsen

THE PREPARATION OF THIS DRAWING HAS BEEN FINANCED BY THE TAXES OF THE CITIZENS OF LOS ANGELES COUNTY AND OF THE STATE OF CALIFORNIA.

REV	DATE	BY	APP	REG NO	EXPIRES	SEAL HOLDER	DESCRIPTION
1	11/21/13	CS	JT	C21914	8/31/15	JOHN TRAUTMANN	ECI 60
0	1/24/13	CS	JT	C21914	8/31/13	JOHN TRAUTMANN	APPROVED FOR CONSTRUCTION

DESIGNED BY J. JACOBSEN
DRAWN BY M. KHANBABIAN
CHECKED BY C. SUERO
IN CHARGE J. TRAUTMANN
DATE 1/24/13

LICENSED ARCHITECT JOHN P. TRAUTMANN No. C21914 Exp. 08-31-15 ARCHITECTURAL STATE OF CALIFORNIA

Exposition Metro Line Construction Authority
Expo

Exposition Construction Authority Approved for Construction Drawings - AFC JAN 28 2014

SKANSKA RADOS

444 South Flower Street
Suite 2200
Los Angeles, CA 90071
TEL (213) 443-7463
FAX (213) 362-9481

PARSONS BRINCKERHOFF

CURRENT STATUS

EXPOSITION LRT PROJECT- PHASE 2
COMMON STATION DETAILS
FINISH SCHEDULE

CONTRACT NO XP8902-002
DRAWING NO A-A-660
REV 1
SCALE NO SCALE
SHEET NO

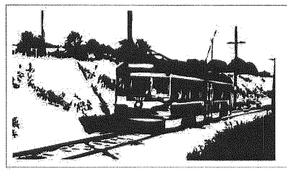

PASSENGER SERVICE ON THE SANTA MONICA AIR LINE WILL BE SUSPENDED

1946

PAVER TYPE M — 13 — A-A-670
NO SCALE

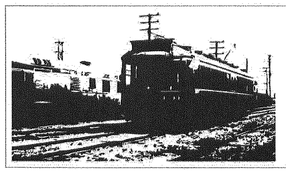

NEW AIR LINE RUNNING NOW EVERY HOUR ON FORTY-MINUTE SCHEDULE COMPLETES AN ALREADY UNSURPASSED CAR SERVICE

1912

PAVER TYPE N — 14 — A-A-670
NO SCALE

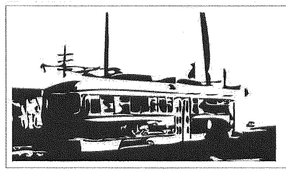

A GOLDEN HAZE CROWNS HORIZON AS YOUR TRAIN TRAVELS ON TOWARDS SANTA MONICA

1921

PAVER TYPE P — 15 — A-A-670
NO SCALE

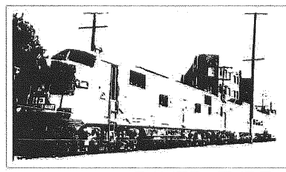

THE TRAIN OF TOMORROW WILL BE SHOWN ON EXPOSITION BLVD

1947

PAVER TYPE Q — 16 — A-A-670
NO SCALE

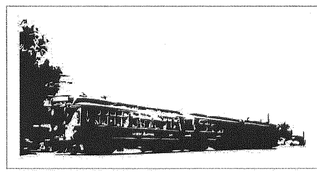

NEW AIRLINE NOW RUNNING HOURLY, MAKING THE TRIP IN 40 MINUTES

1912

PAVER TYPE R — 17 — A-A-670
NO SCALE

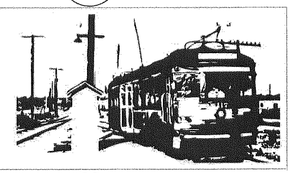

ONCE FREE OF LOS ANGELES, IT MAKES ALMOST A STRAIGHT LINE TO THE BEACH CITY OF SANTA MONICA

1911

PAVER TYPE S — 18 — A-A-670
NO SCALE

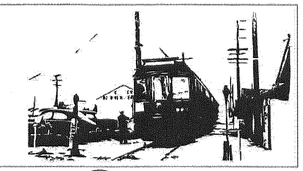

YOU WILL FIND THREE INTERSECTING ELECTRIC LINES- THE LOGICAL CENTER TO DEVELOP A TOWNSITE

1913

PAVER TYPE F — 7 — A-A-670
NO SCALE

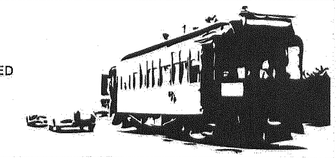

SANTA MONICA HAS LONG BEEN REGARDED AS THE MOST ACCESSIBLE POINT ON THE PACIFIC COAST

1912

PAVER TYPE G — 8 — A-A-670
NO SCALE

LAST YEAR THE PACIFIC ELECTRIC CARRIED BETWEEN 70,000 AND 80,000 PERSONS TO ALL THE BEACHES

1912

PAVER TYPE H — 9 — A-A-670
NO SCALE

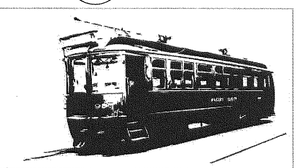

WORK BEGAN ON GROUNDS FOR HIGH-CLASS BEACH AMUSEMENT RESORT AND PROMENADE AT PACIFIC ELECTRIC LINE TERMINAL

1915

PAVER TYPE J — 10 — A-A-670
NO SCALE

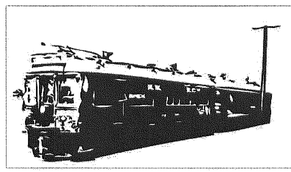

SANTA MONICA WILL BE FIFTEEN MINUTES CLOSER TO LOS ANGELES THROUGH THE CONSTRUCTION OF THE PACIFIC ELECTRIC LINE

1913

PAVER TYPE K — 11 — A-A-670
NO SCALE

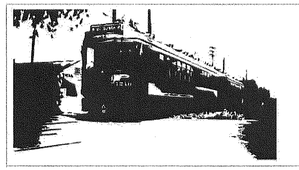

PUBLIC UTILITIES COMMISSION TO HALT OPERATION OF THE DIESEL TRAINS.

1916

PAVER TYPE L — 12 — A-A-670
NO SCALE

PACIFIC ELECTRIC — COMFORT · SPEED · SAFETY

PAVER TYPE A.1 — 1 — A-A-670
NO SCALE

PACIFIC ELECTRIC — COMFORT · SPEED · SAFETY

PAVER TYPE A.2 — 2 — A-A-670
NO SCALE

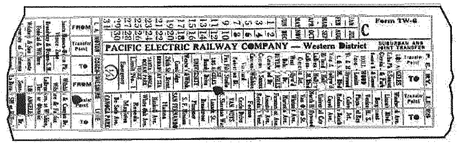

Form TW-6

PACIFIC ELECTRIC RAILWAY COMPANY — Western District

PAVER TYPE B — 3 — A-A-670
NO SCALE

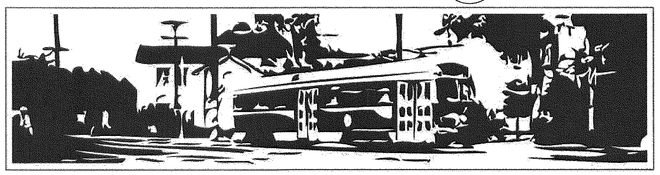

PAVER TYPE C — 4 — A-A-670
NO SCALE

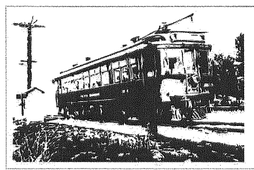

SANTA MONICA AIRLINE CARS WILL RUN THROUGH TO THE BEACHES

1912

PAVER TYPE D — 5 — A-A-670
NO SCALE

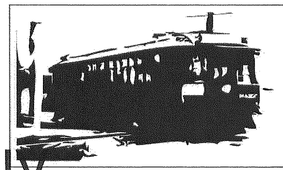

THERE WERE NO SPEECHES OR FANFARE WHEN THE LAST TRAIN PULLED OUT

1988

PAVER TYPE E — 6 — A-A-670
NO SCALE

NOTES:

1. PAVER GRAPHICS ON THIS DRAWING ARE FOR REFERENCE ONLY. FINAL GRAPHICS AND TEXT TO BE PER DIGITAL FILES PROVIDED TO FABRICATOR.
2. AREAS SHOWN IN BLACK TO BE FINISHED WITH MONOCHEM, AQUASTAIN, SEMI-TRANSPARENT, WATERPROOF. COLOR 173, BLACK.
3. PROVIDE CONTROL JOINTS AS REQUIRED PER LAYOUT.
4. FINAL GRAPHICS TO BE APPROVED BY EXPO.

SRJV
FEB 01 2013
ISSUED FOR CONSTRUCTION

THE PREPARATION OF THIS DRAWING HAS BEEN FINANCED BY THE TAXES OF THE CITIZENS OF LOS ANGELES COUNTY AND OF THE STATE OF CALIFORNIA.

REV	DATE	BY	APP	REG NO	EXPIRES	SEAL HOLDER	DESCRIPTION
0	1/24/13	CS	JT	C21914	8/31/13	JOHN TRAUTMANN	APPROVED FOR CONSTRUCTION

DESIGNED BY J. JACOBSEN
DRAWN BY M. KHANBABIAN
CHECKED BY C. SUERO
IN CHARGE J. TRAUTMANN
DATE 1/24/13

LICENSED ARCHITECT — JOHN P. TRAUTMANN — No. C21914 — Exp. 08-31-13 — ARCHITECTURAL — STATE OF CALIFORNIA

Exposition Metro Line Construction Authority
Expo

EXPO SKANSKA RADOS

444 South Flower Street
Suite 2200
Los Angeles, CA 90071
TEL (213) 443-7463
FAX (213) 362-9481

PARSONS BRINCKERHOFF

Exposition Construction Authority Approved for Construction — Drawings - AFC — JAN 31 2013

CURRENT STATUS

EXPOSITION LRT PROJECT- PHASE 2
COMMON STATION DETAILS
SPECIALTY PAVERS LAYOUT

CONTRACT NO XP8902-002
DRAWING NO A-A-670
REV 0
SCALE NO SCALE
SHEET NO

C:\projectwise\pb\projectwiseimt\jacobsenj\dms\88596\expo2-A-A-670.dwg
4-Feb-13 1:59 PM Jacobsen, John J.

C:\projectwise\pb\projectwise\mt\jacobsenj\dms08986\arcpo2-A-A-691.dwg

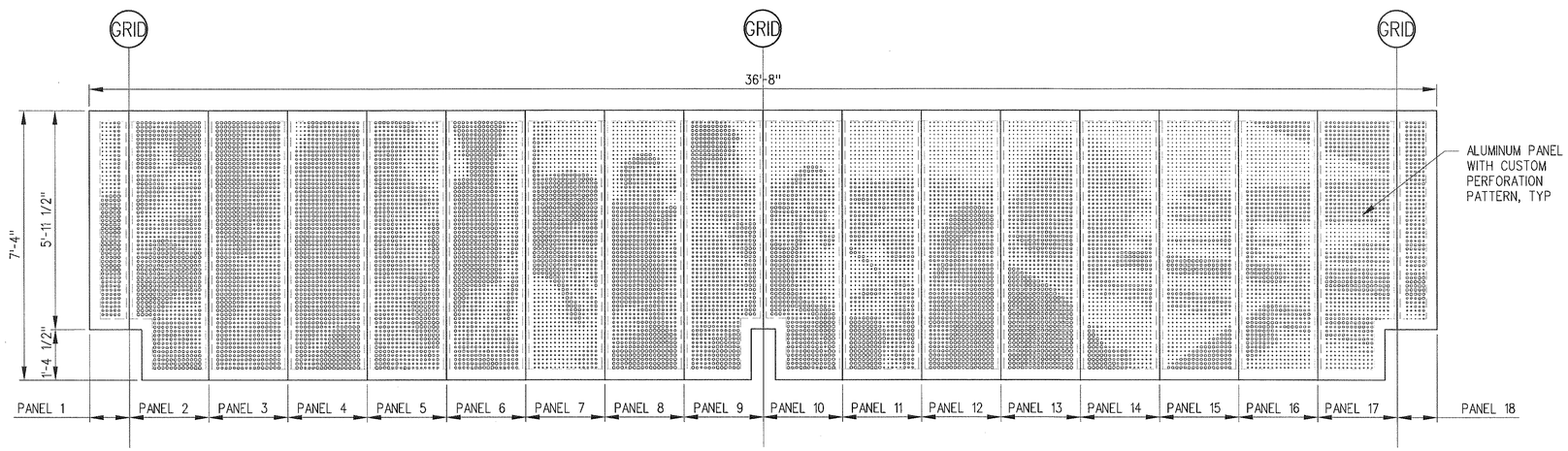

NOTES:

1. SEE STATION RAIN CANOPY SHEETS FOR CANOPY LAYOUT INFO
2. FINAL PERFORATION PATTERN LAYOUT TO BE APPROVED BY EXPO

TICKETING AREA PERFORATION LAYOUT PLAN

1/2"=1'-0"

1 / A-A-691

SRJV
FEB 01 2013
ISSUED FOR CONSTRUCTION

THE PREPARATION OF THIS DRAWING HAS BEEN FINANCED BY THE TAXES OF THE CITIZENS OF LOS ANGELES COUNTY AND OF THE STATE OF CALIFORNIA.

REV	DATE	BY	APP	REG NO	EXPIRES	SEAL HOLDER	DESCRIPTION
0	1/24/13	CS	JT	C21914	8/31/13	JOHN TRAUTMANN	APPROVED FOR CONSTRUCTION

DESIGNED BY J. JACOBSEN
DRAWN BY M. KHANBABIAN
CHECKED BY C. SUERO
IN CHARGE J. TRAUTMANN
DATE 1/24/13

LICENSED ARCHITECT JOHN P. TRAUTMANN No. C21914 Exp. 08-31-13 ARCHITECTURAL STATE OF CALIFORNIA

Exposition Metro Line Construction Authority
Expo

EXPO SKANSKA RADOS

444 South Flower Street
Suite 2200
Los Angeles, CA 90071
TEL (213) 443-7463
FAX (213) 362-9481

PARSONS BRINCKERHOFF

Exposition Construction Authority
Approved for Construction
Drawings - AFC
JAN 31 2013

CURRENT STATUS

EXPOSITION LRT PROJECT- PHASE 2
COMMON STATION DETAILS
RAIN CANOPY PANEL
PERFORATIONS LAYOUT PLAN
TICKETING AREA

CONTRACT NO XP8902-002
DRAWING NO A-A-691
REV 0
SCALE 1/2" = 1'-0"
SHEET NO

Jacobsen, John J. 2:03 PM 4-Feb-13

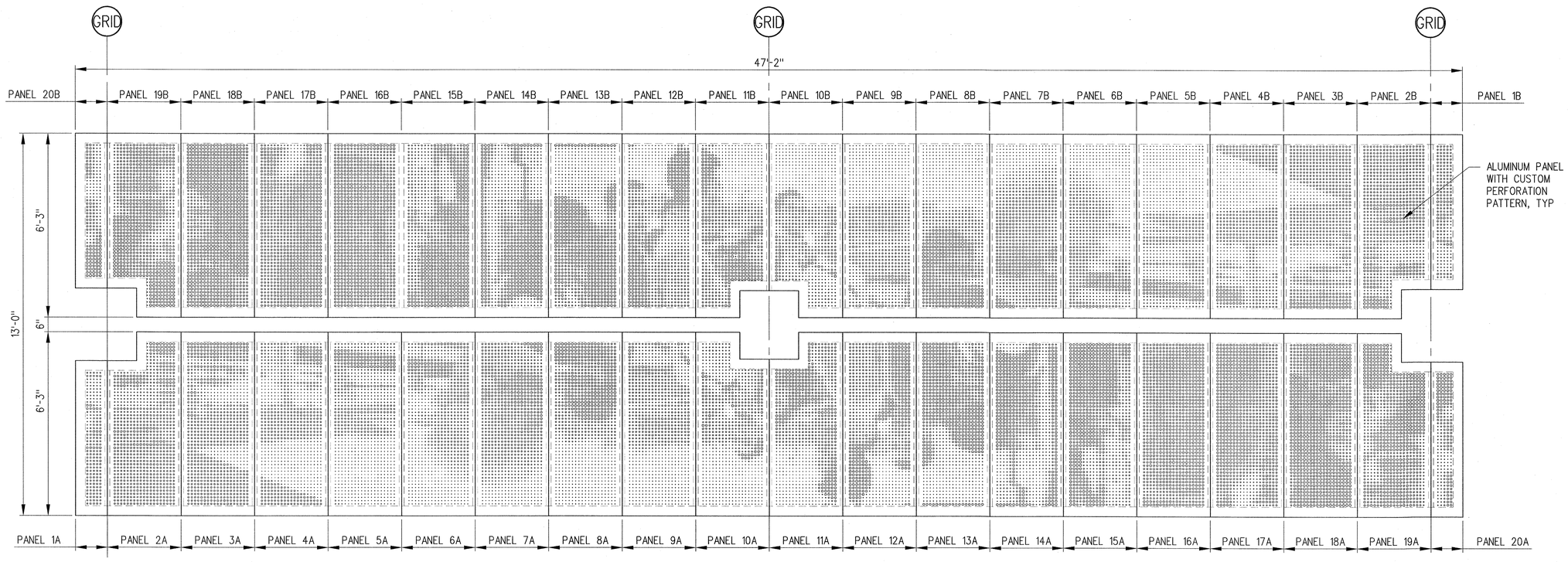

NOTE:

1. SEE STATION RAIN CANOPY SHEETS FOR CANOPY LAYOUT INFO
2. PERFORATION PATTERN LAYOUT TO BE APPROVED BY EXPO

CENTER PLATFORM PERFORATION LAYOUT PLAN

1/2"=1'-0"

1 / A-A-692

SRJV

FEB 19 2013

ISSUED FOR CONSTRUCTION

2' 1' 0 2' 4'

THE PREPARATION OF THIS DRAWING HAS BEEN FINANCED BY THE TAXES OF THE CITIZENS OF LOS ANGELES COUNTY AND OF THE STATE OF CALIFORNIA.

REV	DATE	BY	APP	REG NO	EXPIRES	SEAL HOLDER	DESCRIPTION
0	2/8/13	CS	JT	C21914	8/31/13	JOHN TRAUTMANN	APPROVED FOR CONSTRUCTION

DESIGNED BY J. JACOBSEN
DRAWN BY M. KHANBABIAN
CHECKED BY C. SUERO
IN CHARGE J. TRAUTMANN
DATE 2/8/13

LICENSED ARCHITECT JOHN P. TRAUTMANN No. C21914 Exp. 08-31-13 ARCHITECTURAL STATE OF CALIFORNIA

Exposition Metro Line Construction Authority
Expo
Exposition Construction Authority Approved for Construction Drawings - AFC
FEB 19 2013

EXPO SKANSKA RADOS

444 South Flower Street
Suite 2200
Los Angeles, CA 90071
TEL (213) 443-7463
FAX (213) 362-9481

PARSONS BRINCKERHOFF

CURRENT STATUS

EXPOSITION LRT PROJECT- PHASE 2
COMMON STATION DETAILS
RAIN CANOPY PANEL
PERFORATIONS LAYOUT PLAN
CENTER PLATFORM

CONTRACT NO XP8902-002
DRAWING NO A-A-692
REV 0
SCALE 1/2" = 1'-0"
SHEET NO

C:\Expo2 Sheets\Common Details\expo2-A-A-692.dwg
7-Feb-13 2:04 PM Jacobsen, John J.

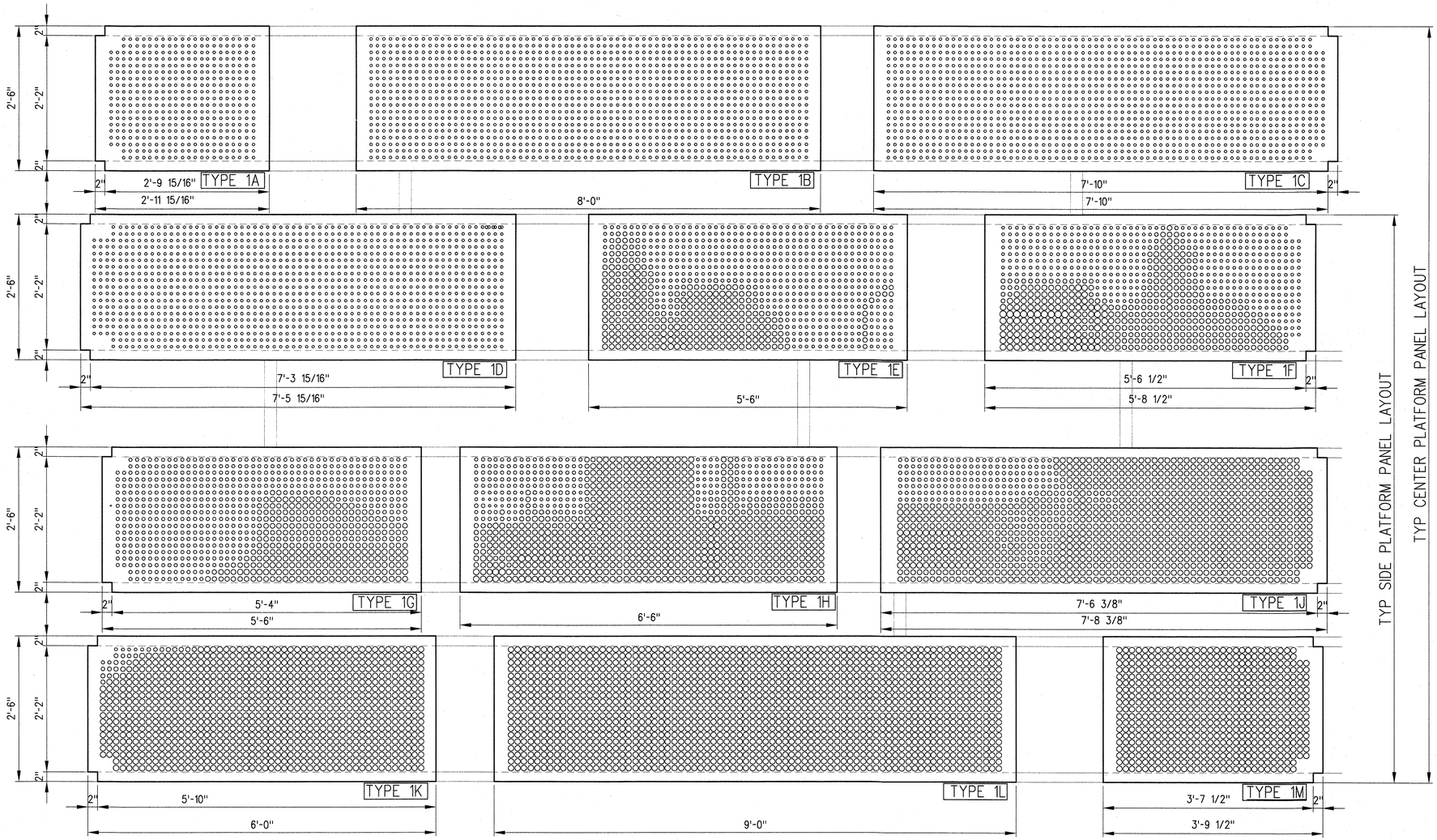

NOTES:

1. SEE STATION CANOPY SHEETS FOR CANOPY LAYOUT INFO
2. FINAL PERFORATION PATTERN LAYOUT TO BE APPROVED BY EXPO

CANOPY ROOF PANEL
ORIENTATION 1

1"=1'-0"

1
A-A-695

SRJV
JUN 24 2013
ISSUED FOR CONSTRUCTION

THE PREPARATION OF THIS DRAWING HAS BEEN FINANCED BY THE TAXES OF THE CITIZENS OF LOS ANGELES COUNTY AND OF THE STATE OF CALIFORNIA.

REV	DATE	BY	APP	REG NO	EXPIRES	SEAL HOLDER	DESCRIPTION
0	5/30/13	CS	JT	C21914	8/31/13	JOHN TRAUTMANN	APPROVED FOR CONSTRUCTION

DESIGNED BY J. JACOBSEN
DRAWN BY M. KHANBABIAN
CHECKED BY C. SUERO
IN CHARGE J. TRAUTMANN
DATE 5/30/13

LICENSED ARCHITECT JOHN P. TRAUTMANN No. C21914 Exp. 08-31-13 ARCHITECTURAL STATE OF CALIFORNIA

Exposition Metro Line Construction Authority
Expo
EXPO SKANSKA RADOS
444 South Flower Street
Suite 2200
Los Angeles, CA 90071
TEL (213) 443-7463
FAX (213) 362-9481

Exposition Construction Authority
Approved for Construction
Drawings - AFC
JUN 21 2013
PARSONS BRINCKERHOFF
CURRENT STATUS

EXPOSITION LRT PROJECT- PHASE 2
COMMON STATION DETAILS
CANOPY ROOF PANEL
PERFORATIONS LAYOUT PLAN
ORIENTATION 1

CONTRACT NO XP8902-002
DRAWING NO A-A-695
REV 0
SCALE 1" = 1'-0"
SHEET NO

C:\Users\khanbabian\Desktop\sheet-pop\expo2-A-A-695.dwg
29-May-13 8:56 AM Khanbabian, Melineh

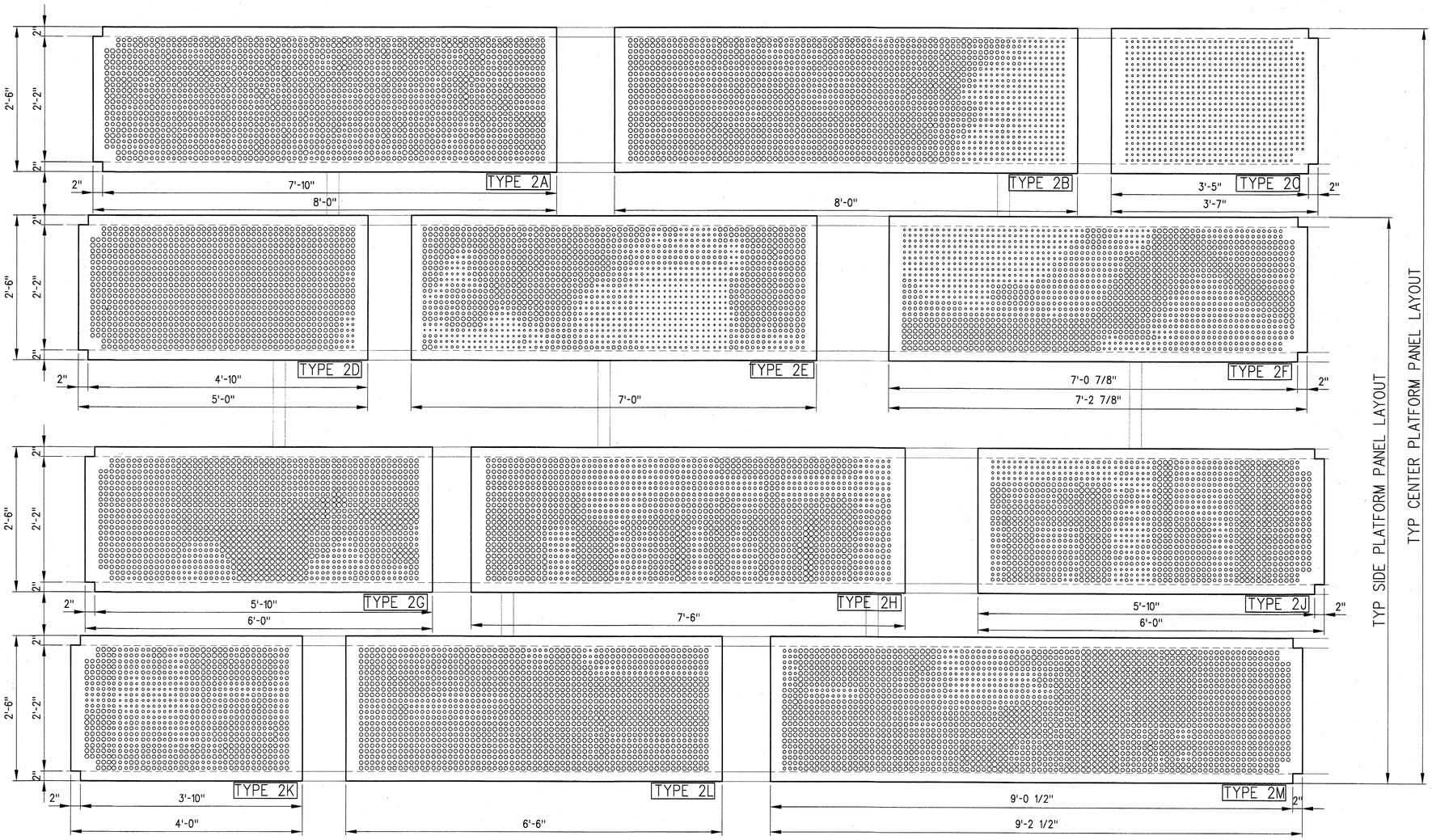

NOTES:

1. SEE STATION CANOPY SHEETS FOR CANOPY LAYOUT INFO
2. FINAL PERFORATION PATTERN LAYOUT TO BE APPROVED BY EXPO

CANOPY ROOF PANEL
ORIENTATION 2
1"=1'-0"

1
A-A-696

SRJV
JUN 24 2013
ISSUED FOR CONSTRUCTION

THE PREPARATION OF THIS DRAWING HAS BEEN FINANCED BY THE TAXES OF THE CITIZENS OF LOS ANGELES COUNTY AND OF THE STATE OF CALIFORNIA.

REV	DATE	BY	APP	REG NO	EXPIRES	SEAL HOLDER	DESCRIPTION
0	5/30/13	CS	JT	C21914	8/31/13	JOHN TRAUTMANN	APPROVED FOR CONSTRUCTION

DESIGNED BY J. JACOBSEN
DRAWN BY M. KHANBABIAN
CHECKED BY C. SUERO
IN CHARGE J. TRAUTMANN
DATE 5/30/13

LICENSED ARCHITECT
JOHN P. TRAUTMANN
No. C21914
Exp. 08-31-13
ARCHITECT
STATE OF CALIFORNIA

Exposition Metro Line Construction Authority
Expo
EXPO SKANSKA RADOS
444 South Flower Street
Suite 2200
Los Angeles, CA 90071
TEL (213) 443-7463
FAX (213) 362-9481

Exposition Construction Authority
Approved for Construction
Drawings - AFC
JUN 21 2013
PARSONS BRINCKERHOFF
CURRENT STATUS

EXPOSITION LRT PROJECT- PHASE 2
COMMON STATION DETAILS
CANOPY ROOF PANEL
PERFORATIONS LAYOUT PLAN
ORIENTATION 2

CONTRACT NO XP8902-002
DRAWING NO A-A-696
REV 0
SCALE 1" = 1'-0"
SHEET NO

C:\Users\khanbabian\Desktop\sheet-pp\exp2-A-A-696.dwg
29-May-13 8:56 AM Khanbabian, Melinen

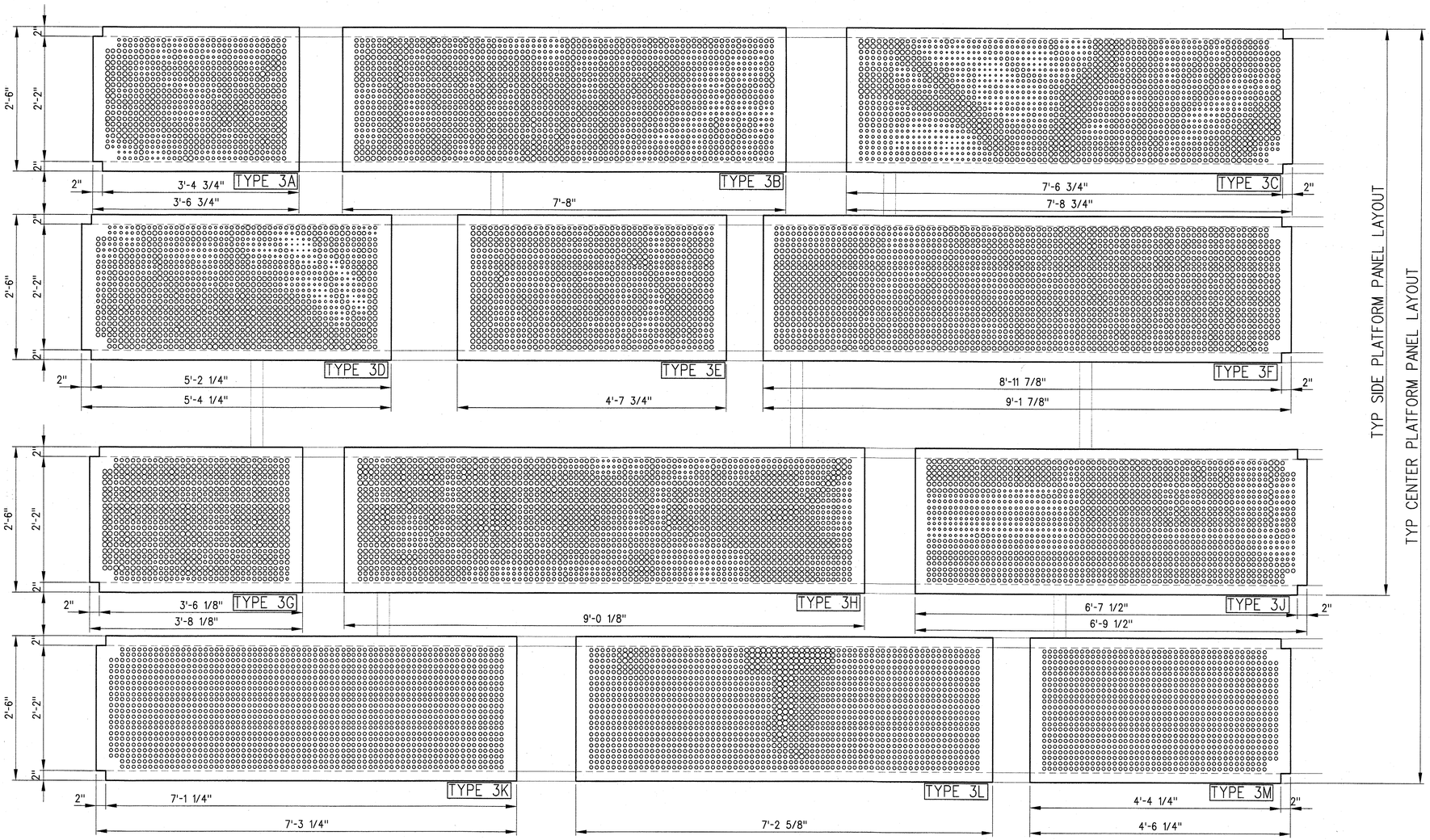

NOTES:

1. SEE STATION CANOPY SHEETS FOR CANOPY LAYOUT INFO
2. FINAL PERFORATION PATTERN LAYOUT TO BE APPROVED BY EXPO

CANOPY ROOF PANEL
ORIENTATION 3
1"=1'-0"

1
A-A-697

SRJV
JUN 24 2013
ISSUED FOR CONSTRUCTION

THE PREPARATION OF THIS DRAWING HAS BEEN FINANCED BY THE TAXES OF THE CITIZENS OF LOS ANGELES COUNTY AND OF THE STATE OF CALIFORNIA.

REV	DATE	BY	APP	REG NO	EXPIRES	SEAL HOLDER	DESCRIPTION
0	5/30/13	CS	JT	C21914	8/31/13	JOHN TRAUTMANN	APPROVED FOR CONSTRUCTION

DESIGNED BY J. JACOBSEN
DRAWN BY M. KHANBABIAN
CHECKED BY C. SUERO
IN CHARGE J. TRAUTMANN
DATE 5/30/13

LICENSED ARCHITECT JOHN P. TRAUTMANN No. C21914 Exp. 08-31-13 ARCHITECTURAL STATE OF CALIFORNIA

Exposition Metro Line Construction Authority
Expo
Exposition Construction Authority
Approved for Construction
Drawings - AFC
JUN 21 2013

EXPO SKANSKA RADOS
444 South Flower Street
Suite 2200
Los Angeles, CA 90071
TEL (213) 443-7463
FAX (213) 362-9481

PARSONS BRINCKERHOFF
CURRENT STATUS

EXPOSITION LRT PROJECT- PHASE 2
COMMON STATION DETAILS
CANOPY ROOF PANEL
PERFORATIONS LAYOUT PLAN
ORIENTATION 3

CONTRACT NO XP8902-002
DRAWING NO A-A-697
REV 0
SCALE 1" = 1'-0"
SHEET NO

C:\Users\khanbabian\Desktop\sheet-pop\exp2-A-A-697.dwg
29-May-13 8:56 AM Khanbabian, Melineh

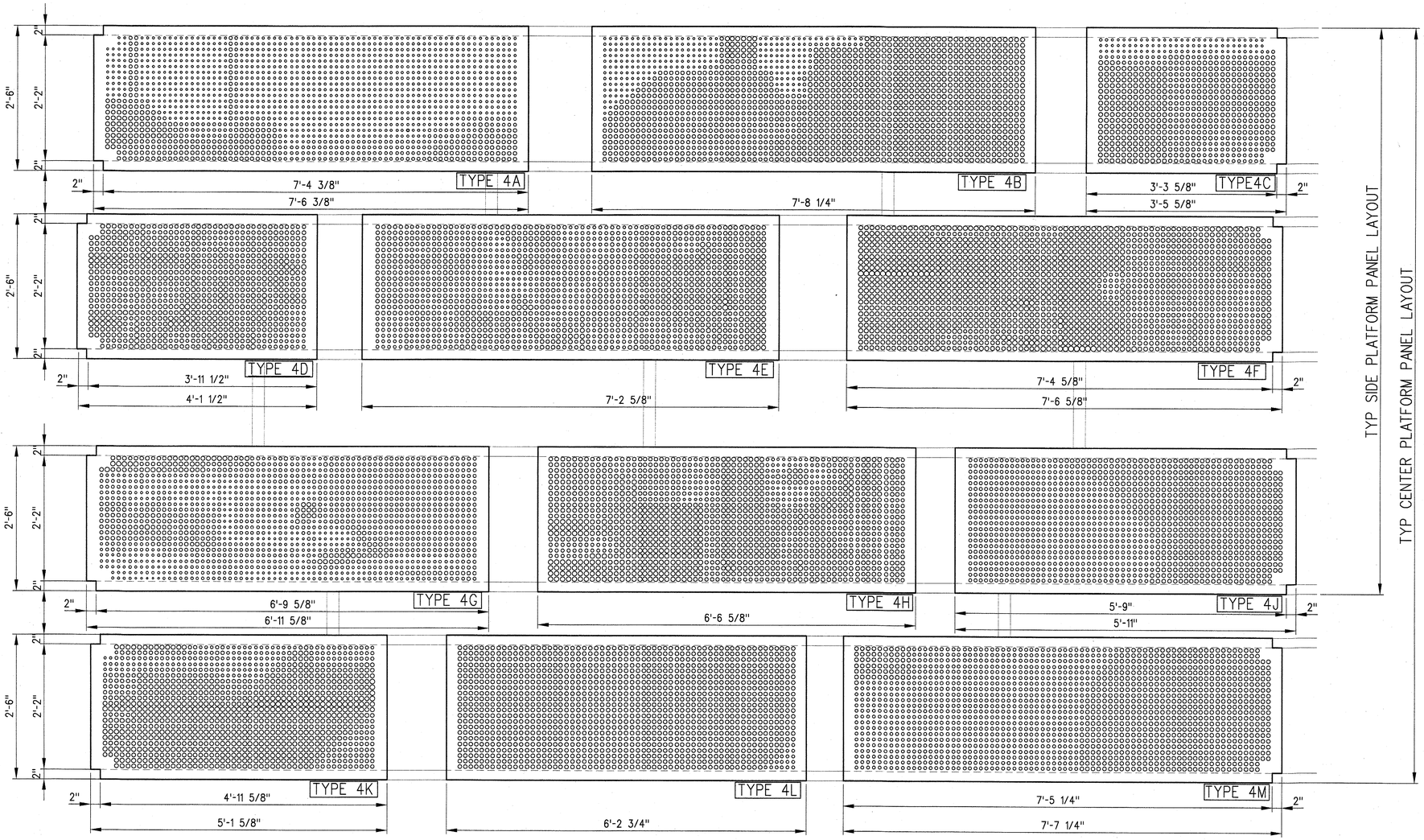

NOTES:

1. SEE STATION CANOPY SHEETS FOR CANOPY LAYOUT INFO
2. FINAL PERFORATION PATTERN LAYOUT TO BE APPROVED BY EXPO

CANOPY ROOF PANEL
ORIENTATION 4
1"=1'-0"

1
A-A-698

SRJV
JUN 24 2013
ISSUED FOR CONSTRUCTION

THE PREPARATION OF THIS DRAWING HAS BEEN FINANCED BY THE TAXES OF THE CITIZENS OF LOS ANGELES COUNTY AND OF THE STATE OF CALIFORNIA.

REV	DATE	BY	APP	REG NO	EXPIRES	SEAL HOLDER	DESCRIPTION
0	5/30/13	CS	JT	C21914	8/31/13	JOHN TRAUTMANN	APPROVED FOR CONSTRUCTION

DESIGNED BY J. JACOBSEN
DRAWN BY M. KHANBABIAN
CHECKED BY C. SUERO
IN CHARGE J. TRAUTMANN
DATE 5/30/13

LICENSED ARCHITECT
JOHN P. TRAUTMANN
No. C21914
Exp. 08-31-13
ARCHITECTURAL
STATE OF CALIFORNIA

Exposition Metro Line Construction Authority
Expo
EXPO SKANSKA RADOS

444 South Flower Street
Suite 2200
Los Angeles, CA 90071
TEL (213) 443-7463
FAX (213) 362-9481

Exposition Construction Authority
Approved for Construction
Drawings - AFC
JUN 21 2013
PARSONS BRINCKERHOFF
CURRENT STATUS

EXPOSITION LRT PROJECT- PHASE 2
COMMON STATION DETAILS
CANOPY ROOF PANEL
PERFORATIONS LAYOUT PLAN
ORIENTATION 4

CONTRACT NO XP8902-002
DRAWING NO A-A-698
REV 0
SCALE 1" = 1'-0"
SHEET NO

C:\Users\khanbabian\Desktop\sheet-pop\expo2-A-A-698.dwg
29-May-13 8:56 AM Khanbabian, Melineh

C:\Users\khanbabiamm\Desktop\sheet-poplexpo2-A-A-699.dwg
Khanbabian, Melineh 8:56 AM 29-May-13

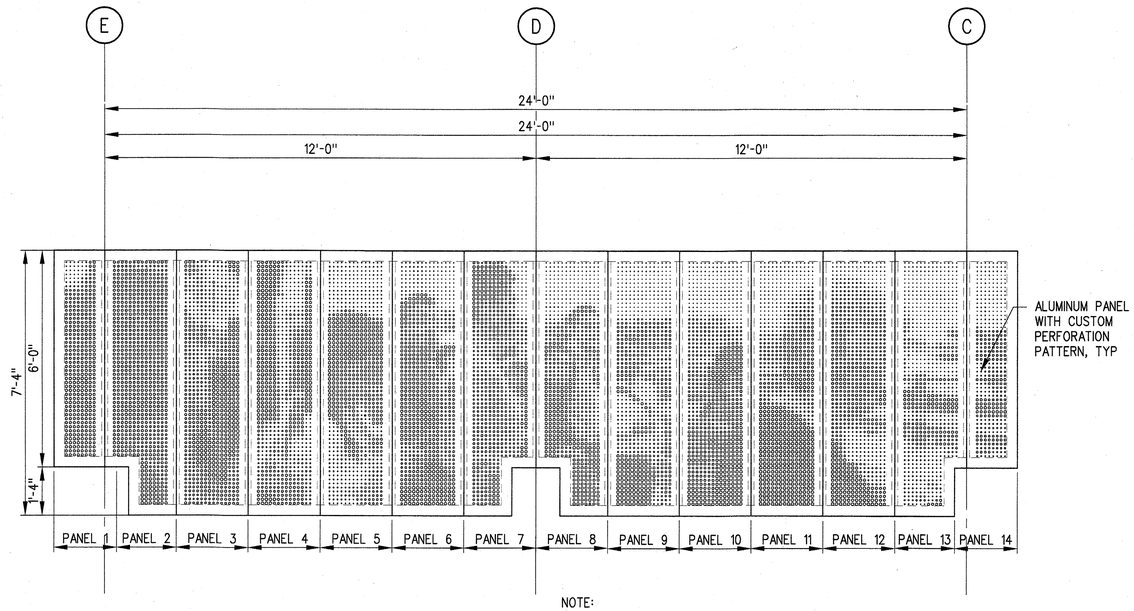

NOTE:

1. SEE STATION RAIN CANOPY SHEETS FOR CANOPY LAYOUT INFO
2. PERFORATION PATTERN LAYOUT TO BE APPROVED BY EXPO

TICKETING AREA #2 RAIN CANOPY PANEL LAYOUT PLAN (1) A-A-699

1/2"=1'-0"

2' 1' 0 2' 4'

SRJV
JUN 24 2013
ISSUED FOR CONSTRUCTION

THE PREPARATION OF THIS DRAWING HAS BEEN FINANCED BY THE TAXES OF THE CITIZENS OF LOS ANGELES COUNTY AND OF THE STATE OF CALIFORNIA.

REV	DATE	BY	APP	REG NO	EXPIRES	SEAL HOLDER	DESCRIPTION
0	5/30/13	CS	JT	C21914	8/31/13	JOHN TRAUTMANN	APPROVED FOR CONSTRUCTION

DESIGNED BY J. JACOBSEN
DRAWN BY M. KHANBABIAN
CHECKED BY C. SUERO
IN CHARGE J. TRAUTMANN
DATE 5/30/13

LICENSED ARCHITECT JOHN P. TRAUTMANN No. C21914 Exp. 08/31/13 ARCHITECTURAL STATE OF CALIFORNIA

Exposition Metro Line Construction Authority
Expo
Exposition Construction Authority Approved for Construction Drawings - AFC
JUN 21 2013

EXPO SKANSKA RADOS
444 South Flower Street
Suite 2200
Los Angeles, CA 90071
TEL (213) 443-7463
FAX (213) 362-9481

PARSONS BRINCKERHOFF
CURRENT STATUS

EXPOSITION LRT PROJECT- PHASE 2
COLORADO/4TH STREET STATION
TICKETING AREA RAIN CANOPY
PHOTO PERFORATIONS
LAYOUT PLAN

CONTRACT NO XP8902-002
DRAWING NO A-A-699
REV 0
SCALE 1/2" = 1'-0"
SHEET NO

ABBREVIATIONS

AESS	ARCHITECTURALLY EXPOSED STRUCTURAL STEEL
ALT	ALTERNATE
AOR	ARCHITECT OF RECORD
APPROX	APPROXIMATE
ARCH	ARCHITECTURAL
ADD'L	ADDITIONAL
ASTM	AMERICAN SOCIETY FOR TESTING AND MATERIALS
BRG	BEARING
BOT	BOTTOM
BLDG	BUILDING
BM	BEAM
BTW	BETWEEN
C	CAMBER
CIP	CAST IN PLACE
℄	CENTER LINE
CLR	CLEARANCE OR CLEAR
COL	COLUMN
CONC	CONCRETE
CONST	CONSTRUCTION
CJ	CONSTRUCTION JOINT
CONT	CONTINUOUS OR CONTINUED
DL	DEAD LOAD
DEG, °	DEGREE
DET	DETAIL
DIAG	DIAGONAL
DIA, ø	DIAMETER
DIM	DIMENSION
DN	DOWN
DWG	DRAWING
EA	EACH
EF	EACH FACE
EOR	ENGINEER OF RECORD
EW	EACH WAY
EL, ELEV	ELEVATION
=, EQ	EQUAL
EXIST	EXISTING
EXP	EXPANSION
EQUIP	EQUIPMENT
ES	EACH SIDE
FT, '	FEET OR FOOT
FIN	FINISH
FL	FLOOR
FTG	FOOTING
GA	GAGE OR GAUGE
GALV	GALVANIZED
GEN	GENERAL
GRD	GROUND
HT	HEIGHT
HORIZ	HORIZONTAL
IN, "	INCHES OR INCH
INCL	INCLUSIVE, INCLUDING
ID	INSIDE DIAMETER
IOR	INSPECTOR OF RECORD
JT	JOINT
L	ANGLE
LL	LIVE LOAD
LLV	LONG LEG VERTICAL
LLH	LONG LEG HORIZONTAL
LONG	LONGITUDINAL
MB	MACHINE BOLT
MFR	MANUFACTURER
MAX	MAXIMUM
MECH	MECHANICAL
MIN	MINIMUM
MISC	MISCELLANEOUS
NA	NOT APPLICABLE
NIC	NOT IN CONTRACT
NTS	NOT TO SCALE
#	NUMBER (REBAR SIZE)
OC	ON CENTER
OPP	OPPSITE
OPP HAND	OPPOSITE HAND
OD	OUTSIDE DIAMETER
OF	OUTSIDE FACE
OPNG	OPENING
PC	PRECAST
ℙ	PLATE
LB, LBS	POUND OR POUNDS
PCF	POUNDS PER CUBIC FOOT
PSF	POUNDS PER SQUARE FOOT
PSI	POUNDS PER SQUARE INCH
R, RAD	RADIUS
#	REBAR SIZE (NUMBER)
REF	REFERENCE
REINF	REINFORCING OR REINFORCEMENT
REQ'D	REQUIRED
REV	REVISION OR REVISED
SECT	SECTION
SHT	SHEET
SIM	SIMILAR
SMS	SHEET METAL SCREW
SPEC	SPECIFICATION
SQ	SQUARE
SS	STAINLESS STEEL
STD	STANDARD
STA	STATION (ALIGNMENT)
STIFF	STIFFENER
STIR	STIRRUP
STRUCT	STRUCTURAL, STRUCTURE
SYM	SYMMETRICAL
SCHED	SCHEDULE
STL	STEEL
TEMP	TEMPORARY
T&B	TOP & BOTTOM
T.O.	TOP OF
TOC	TOP OF CONCRETE
T/R	TOP OF RAIL
TOS	TOP OF STEEL
TOW	TOP OF WALL
TYP	TYPICAL
UNO	UNLESS NOTED OTHERWISE
VERT	VERTICAL
WWF	WELDED WIRE FABRIC
W/	WITH
W/O	WITHOUT
WP	WORK POINT

STRUCTURAL STEEL NOTES

1. ALL METALS USED FOR STATION STRUCTURE PERMANENTLY EXPOSED TO WEATHER OR SOIL SHALL BE GALVANIZED, PAINTED, OR STAINLESS STEEL. SEE ARCH DRAWINGS AND EXPO2 SPECIFICATIONS FOR ADDITIONAL INFORMATION. (DRFI 10927)
2. ANCHOR BOLTS FOR OCS POLES AND CANOPY POLES SHALL CONFORM TO ASTM F1554, GRADE 55, NUTS FOR ANCHOR BOLTS SHALL CONFORM TO ASTM ~~A563~~, A194 GRADE ~~X~~, HEAVY HEX NUTS, AND FLAT WASHERS FOR ANCHOR BOLTS SHALL CONFORM TO ASTM F436; ALL GALVANIZED TO ASTM A153.
3. ANCHOR BOLTS FOR TICKETING CANOPY COLUMNS AND LIGHT POLES SHALL CONFORM TO ASTM F1554, GRADE 36, MIN, UNO.
4. SEE EXPO2 SPECIFICATIONS 05055-DB, 05120-DB, 05500-DB, 05511-DB, AND 05700-DB FOR ADDITIONAL INFORMATION AND REQUIREMENTS.
5. WELDING OF STRUCTURAL STEEL SHALL BE PERFORMED PER AWS D1.1 USING E70XX ELECTRODES UNLESS OTHERWISE NOTED.

METAL DECK NOTES

1. MATERIAL FOR ROOF METAL DECK SHALL HAVE A MIN YIELD STRENGTH OF 40 KSI AND CONFORM TO ASTM A653-SS GRADE 40 WITH GALVANIZED G60 COATING COMPLYING WITH ASTM A525.
2. FASTENERS FOR METAL DECK ATTACHMENTS SHALL BE #12-14x3/4" TEKS SCREWS (ICC ESR-1976) OR APPROVED EQUAL, UNLESS NOTED OTHERWISE.
3. PROVIDE 2" MINIMUM BEARING AT ALL SUPPORTS. END LAPS OF METAL DECK SHALL BE A MINIMUM OF 2" AND SHALL OCCUR ONLY OVER SUPPORTS. DECK SHALL BE LAID OUT SO THAT A LOW FLUTE FALLS ON EACH PARALLEL SUPPORT.
4. SEE TYPICAL METAL DECK DETAILS, AND EXPO2 SPECIFICATION 05300-DB FOR ADDITIONAL INFORMATION AND REQUIREMENTS.
5. WELDING OF METAL DECK AND LIGHT GAGE STEEL SHALL BE IN ACCORDANCE WITH AWS D1.3 USING E70XX ELECTRODES UNLESS OTHERWISE NOTED.

SYMBOLS

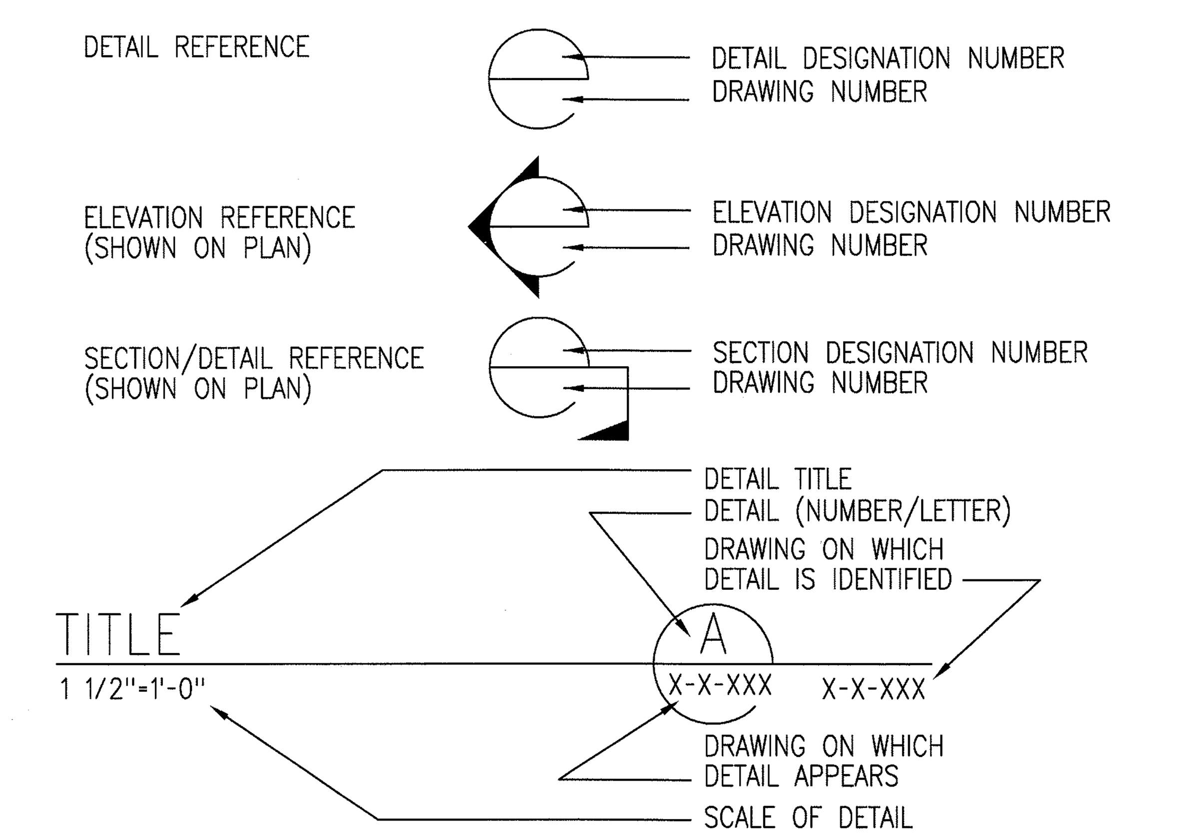

COLD FORMED STEEL FRAMING NOTES

1. NOMENCLATURE 600 S 162 – 54 (600 = DEPTH; S = SHAPE; 162 = FLANGE WIDTH; 54 = MATERIAL THICKNESS)
2. ALL COLD-FORMED STEEL FRAMING SHALL BE GALVANIZED, UNO.
3. COLD-FORMED STEEL GRADES:
   A. 18 GA (43 MILS) AND THINNER ....ASTM A1003 GRADE 33 (FY = 33 KSI)
   B. 16 GA (54 MILS) AND THICKER ....ASTM A1003 GRADE 50 (FY = 50 KSI)
4. SEE THE ARCHITECTURAL DRAWINGS AND EXPO2 SPECIFICATION 05410-DB FOR ADDITIONAL INFORMATION AND REQUIREMENTS.

SRJV JUN 24 2013 ISSUED FOR CONSTRUCTION

FOUNDATION NOTES

1. SEE SOIL REPORT BY: GROUP DELTA CONSULTANTS
   REPORT NO.: L-949 DATED: JANUARY 27, 2012
2. ALLOWABLE SOIL PRESSURES FOR FOOTINGS:
   DEAD LOAD & LIVE LOAD =.......... 2500 PSF
   DEAD LOAD + LIVE LOAD + WIND OR SEISMIC LOAD =.......... 3333 PSF
3. ALLOWABLE LATERAL BEARING PRESSURE IS 300 PSF PER FT OF DEPTH.
4. DESIGN COEFFICIENT OF FRICTION FOR SLIDING: 0.30
5. RETAINING WALL EQUIVALENT FLUID PRESSURES (DRAINED):
   ACTIVE =.......... 35 lb/ft^3
   AT REST =.......... 55 lb/ft^3
   SEISMIC MONONABE-OKABE =.......... 60 lb/ft^3
6. ALL SOIL AND FOUNDATION WORK SHALL BE IN COMPLIANCE WITH SOILS REPORT IN ITEM 1 ABOVE.
7. PROTECT ALL UTILITY LINES, ETC. ENCOUNTERED DURING EXCAVATION AND BACKFILLING.
8. ALL EXCAVATIONS SHALL COMPLY WITH APPLICABLE OSHA REQUIREMENTS & OSHA STANDARD ARTICLE 6.
9. SEE ARCHITECTURAL PLANS FOR LOCATIONS OF SLAB SLOPES, DEPRESSIONS, CURBS, DRAINS, NON-STRUCTURAL PARTITIONS AND OTHER EMBEDDED ITEMS NOT SHOWN ON THE STRUCTURAL PLANS.
10. THE EOR HAS NOT VERIFIED THE LOCATIONS OF EXISTING UNDERGROUND UTILITIES WHETHER OR NOT SHOWN ON THE DRAWINGS. THE LOCATION OF ANY EXISTING UNDERGROUND UTILITIES SHOWN ON THE DRAWINGS ARE APPROXIMATE. IMMEDIATELY NOTIFY SRJV QC, EOR AND AOR SHOULD ANY SUCH UNIDENTIFIED CONDITIONS BE DISCOVERED.
11. FOOTINGS ARE CENTERED UNDER WALLS AND COLUMNS UNO.

REINFORCING NOTES

1. REINFORCING GRADES:
   A. ALL BARS EXCEPT THOSE TO BE WELDED.......... ASTM A615, GRADE 60 (A706, GRADE 60 OPTIONAL)
   B. TIES AND STIRRUPS .... ASTM A615, GRADE 60 (A706, GRADE 60 OPTIONAL)
   C. WELDED WIRE FABRIC .... ASTM A185
   D. ALL BARS TO BE WELDED .... ASTM A706, GRADE 60

   NOTE: ALL BARS SHALL BE DEFORMED, EXCEPT WELDED WIRE FABRIC.
2. MAINTAIN MINIMUM CONCRETE COVER FROM FACE OF CONCRETE TO EDGE OF ALL REINFORCEMENT AS FOLLOWS (UNO):

CONDITION	COVER
CONCRETE POURED AGAINST EARTH	3"
CONCRETE POURED IN FORMS AND EXPOSED TO WEATHER OR EARTH	
– #6 BARS AND LARGER	2"
– #5 BARS AND SMALLER	1 1/2"
STRUCTURAL SLABS ON GRADE	
– FROM BOTTOM OF SLAB	2"
– FROM TOP OF SLAB	1 1/2"

   PROVIDE THE LARGEST COVER REQUIRED FOR ALL APPLICABLE CONDITIONS INCLUDING STIRRUPS & TIES. WHERE #3 STIRRUPS OR TIES ARE USED, ENSURE THAT THE COVER FOR LONGITUDINAL BARS IS ADEQUATE.
3. SEE EXPO2 SPECIFICATION 03200-DB FOR ADDITIONAL INFORMATION AND REQUIREMENTS.

CONCRETE NOTES

1. UNLESS OTHERWISE NOTED OR SPECIFIED, ALL STRUCTURAL CONCRETE AT STATIONS SHALL BE GREENBOOK CLASS 4000 (F'c=4000 PSI @ 28 DAYS), NORMAL WEIGHT, TYPE II CEMENT.
2. UNLESS OTHERWISE NOTED WHERE STATION FLOOR SLOPES, ALL CONCRETE WALL OPENINGS SHALL BE LEVEL, PLUMB AND SQUARE INCLUDING LOUVERS, VENTS, LINTELS AND SLABS.
3. EMBEDDED CONDUITS, PIPES, OR DUCTS ARE NOT ALLOWED UNLESS SPECIFICALLY NOTED ON THESE PLANS. TEMPORARY EMBEDDED ITEMS FOR SAFETY OR CONSTRUCTABILITY PURPOSES SHALL BE REMOVED AND OR REPAIRED AS NECESSARY.
4. SEE EXPO2 SPECIFICATIONS 03100-DB, 03300-DB, AND 03301-DB AND 03600-DB FOR ADDITIONAL INFORMATION AND REQUIREMENTS.

GENERAL NOTES

1. REFER TO THE TYPICAL DETAIL SHEETS FOR TYPICAL DETAILS OF CONSTRUCTION. TYPICAL DETAILS APPLY TO ALL CONSTRUCTION UNLESS SPECIFICALLY NOTED OR SHOWN OTHERWISE. WHERE CONDITIONS REQUIRE MODIFICATIONS OF A TYPICAL DETAIL, SUBMIT MODIFIED DETAIL FOR APPROVAL BY THE ENGINEER OF RECORD (EOR) PRIOR TO FABRICATION AND INSTALLATION. DETAILS OF CONSTRUCTION NOT SHOWN SHALL BE OF SAME NATURE AS THOSE SHOWN FOR SIMILAR CONSTRUCTION.
2. ALL STRUCTURAL DRAWINGS SHALL BE READ IN CONJUNCTION WITH THE SPECIFICATIONS AND ALL OTHER DRAWINGS RELATED TO THE WORK. SEE THE PROJECT SPECIFICATIONS FOR INFORMATION NOT SHOWN ON THESE DRAWINGS AND FOR ADDITIONAL REQUIREMENTS. WHERE INFORMATION IS CONFLICTING, SPECIFIC DETAILS SHALL GOVERN OVER TYPICAL DETAILS WHICH SHALL GOVERN OVER THESE NOTES WHICH SHALL GOVERN OVER SPECIFICATIONS.
3. ALL DIMENSIONS ON STRUCTURAL DRAWINGS SHALL BE CHECKED AGAINST OTHER DISCIPLINES. DO NOT SCALE DRAWINGS. IF DIMENSIONS ARE OMITTED OR NOT CLEAR, CONTACT THE ENGINEER OF RECORD (EOR). ALL DIMENSIONS RELATED TO EXISTING CONDITIONS SHALL BE FIELD VERIFIED. DIMENSIONS ARE TO THE CENTERLINE OF COLUMNS UNO.
4. REFER TO THE PROJECT SPECIFICATIONS FOR SHOP DRAWING AND SUBMITTAL REQUIREMENTS. SUBMITTALS AND SHOP DRAWINGS SHALL BE SUBMITTED A MINIMUM OF 2 WEEKS PRIOR TO SCHEDULED FABRICATION. REVIEW OF SUBMITTALS AND SHOP DRAWINGS BY THE EOR IS FOR GENERAL COMPLIANCE WITH THE CONTRACT DOCUMENTS.
5. REQUIRED CORE DRILLING SHALL NOT CUT ANY CONCRETE REINFORCING. ALL CORE DRILLS ARE TO BE PRESENTED TO THE SRJV QC INSPECTOR FOR VERIFICATION. THE IOR IS TO DOCUMENT CORES EXAMINED INDICATING AN ABSENCE OF REINFORCING.
6. EMBEDDED ITEMS SUCH AS INSERTS OR SLEEVES, AND ANY RECESSES OR OPENINGS REQUIRED FOR UTILITY, ARCHITECTURAL, MECHANICAL, PLUMBING AND ELECTRICAL INSTALLATIONS MAY NOT BE FULLY SHOWN ON THE STRUCTURAL DRAWINGS. REFER TO THE UTILITY, ARCHITECTURAL, MECHANICAL, PLUMBING AND ELECTRICAL, AND TRADE DRAWINGS FOR THE LOCATIONS AND DETAILS OF THESE ITEMS.
7. THE VERTICAL CONTROL OF ALL TRACK STRUCTURES IS BASED ON ELEVATION OF TOP OF RAIL.
8. OCS POLE TYPES SHOWN ON THESE DRAWINGS ARE FOR REFERENCE ONLY, ANY DISCREPANCIES WITH TYPES SHOWN ON OVERHEAD CONTACT SYSTEM'S DRAWINGS SHALL BE IMMEDIATELY BROUGHT TO THE ATTENTION OF THE EOR.
9. ELEVATIONS (E.G., EL. 266.58) AND SLOPES (E.G. 2.00%) SHALL BE VERIFIED PRIOR TO CONSTRUCTION. ANY DISCREPANCIES SHALL BE IMMEDIATELY BROUGHT TO THE ATTENTION OF THE EOR.

STRUCTURAL DESIGN CRITERIA

1. CODES:
   ALL WORK SHALL BE IN CONFORMANCE WITH METRO RAIL DESIGN CRITERIA REV 1 DATED NOVEMBER 4, 2010 AND THE CALIFORNIA BUILDING CODE (CBC) 2010 EDITION, INCLUDING ALL LOCAL AMENDMENTS, AS ADOPTED BY THE AUTHORITY WITH JURISDICTION. ALL STANDARDS USED SHALL BE THE LATEST VERSION APPROVED BY THE CODE ENFORCEMENT AGENCY ON THE DATE OF THE PERMIT ISSUANCE UNLESS SPECIFICALLY NOTED OTHERWISE.
2. DESIGN GRAVITY LOADS:
   LIVE LOADS (REDUCIBLE, UNO):
   a. ROOF, UNIFORM LOAD — 20 PSF
   b. FLOOR(S) UNIFORM LOAD — 100 PSF PLATFORM (NON-REDUCIBLE)
3. WIND DESIGN INFORMATION:
   I = 1.0 OCCUPANCY CAT. II
   BASIC WIND SPEED V_{fm} = 85 MPH (3 SEC GUST), EXPOSURE C
4. SEISMIC DESIGN INFORMATION:
   I = 1.0 OCCUPANCY CAT. II DESIGN CAT. D SITE CLASS D
   S_S = 1.723 S_1 = 0.6 S_{DS} = 1.149 S_{D1} = 0.6
   EQUIVALENT LATERAL FORCE PROCEDURE
   PLATFORM: SPECIAL REINFORCED CONCRETE SHEAR WALLS
   R = 5 C_S = 0.25 MAX STORY DRIFT Δ = 0.025 h
   CANOPY: INVERTED PENDULUM TYPE STRUCTURE (NON-BUILDING STRUCTURE NOT SIMILAR TO BUILDINGS)
   R = 2.0 C_S = 0.574 MAX STORY DRIFT Δ = 0.025 h
   COMMUNICATION/SIGNAL BUILDING:
   SPECIAL REINFORCED CONCRETE SHEAR WALLS
   R = 5 C_S = 0.2
5. FOR HANDRAIL, GUARDRAIL, ETC. LOADING, SEE SPECIFICATIONS 02831-DB, 05500-DB, AND 05511-DB.

THE PREPARATION OF THIS DRAWING HAS BEEN FINANCED BY THE TAXES OF THE CITIZENS OF LOS ANGELES COUNTY AND OF THE STATE OF CALIFORNIA.

REV	DATE	BY	APP	REG NO	EXPIRES	SEAL HOLDER	DESCRIPTION
0	5/30/13	FL	KW	2870	9/30/13	KEN WONG	APPROVED FOR CONSTRUCTION

DESIGNED BY D. YOON
DRAWN BY E. RAMIREZ
CHECKED BY D. KATHURIA
IN CHARGE K.WONG
DATE 5/30/13

REGISTERED PROFESSIONAL ENGINEER KENNETH N. WONG No. 2870 Exp. 09/30/13 STRUCTURAL STATE OF CALIFORNIA

Exposition Metro Line Construction Authority
Expo
Exposition Construction Authority Approved for Construction Drawings - AFC

EXPO SKANSKA RADOS
444 South Flower Street
Suite 2200
Los Angeles, CA 90071
TEL (213) 443-7463
FAX (213) 362-9481

PARSONS BRINCKERHOFF JUN 21 2013
miyamoto 700 South Flower Street, Suite 1010 Los Angeles, CA 90017 T: (213) 362-7778 miyamotointernational.com
MI0902064.03
CURRENT STATUS

EXPOSITION LRT PROJECT- PHASE 2
COLORADO/4TH STREET STATION
STRUCTURAL
GENERAL NOTES AND ABBREVIATIONS

CONTRACT NO XP8902-002
DRAWING NO S-S7-001 REV 0
SCALE NONE
SHEET NO

I:\2009\MI0902064.03 Metro Expo Line Phase 2 Stage B\Drawings\1 Structural\07 Colorado_4th Street Station\expo2-S-S7-001.dwg 30-May-13 2:36 PM Edgar Ramirez

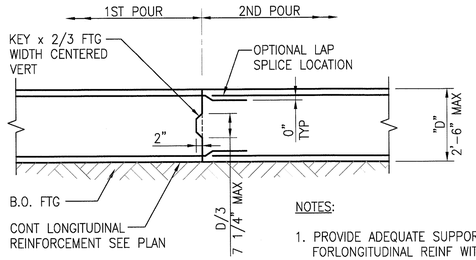

NOTES:

1. PROVIDE ADEQUATE SUPPORT FORLONGITUDINAL REINF WITHIN 6" OF JT USING FTG TIES, VERT DOWELS OR OTHER MEANS.
2. SECTIONS SHOWN ARE AT CENTER OF FTG IN LONGITUDINAL DIRECTION.
3. CLEAN EXPOSED CONC SURFACE PRIOR TO SECOND POUR.

CONT. FOOTING CONSTRUCTION JOINT (7 / S-S7-011)

NO SCALE

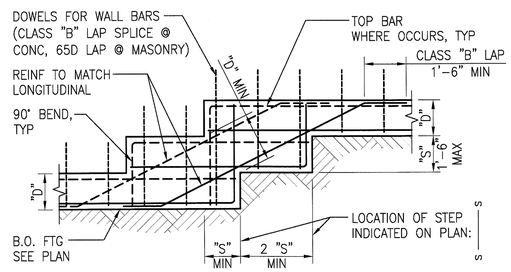

NOTES:

1. FOR FOOTING REINFORCING, SEE PLANS AND DETAILS. VERTICAL WALL DOWELS SHALL EXTEND TO BOTTOM OF FOOTING.
2. TRANSVERSE STEEL NOT SHOWN FOR CLARITY.
3. TWO STEPS ARE SHOWN, DETAIL FOR SINGLE STEP OR ADDITIONAL STEPS IS SIMILAR.

TYP. STEP IN WALL FOOTING (5 / S-S7-011)

NO SCALE

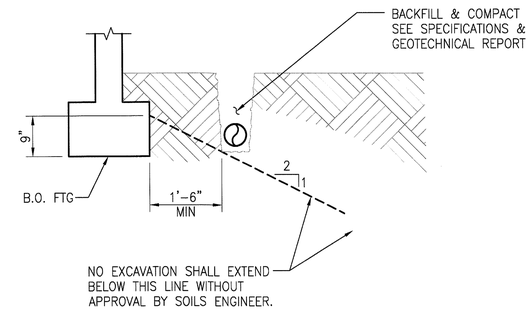

NOTES:

1. THE CONTRACTOR SHALL BE RESPONSIBLE FOR SHORING OR OTHERWISE MAINTAINING THE SIDES OF THE EXCAVATION FROM CAVE-INS UNTIL ALL BACKFILL IS COMPLETED SEE SPECIFICATIONS AND GEOTECHNICAL REPORT.

TYPICAL EXCAVATION POURED AGAINST EARTH (3 / S-S7-011)

NO SCALE

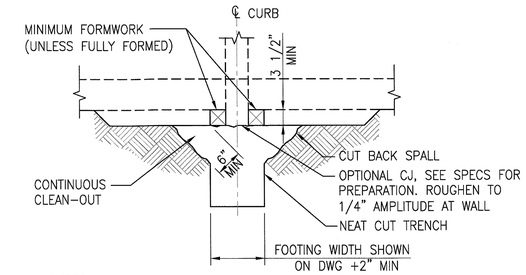

NOTES:

1. FOOTINGS POURED AGAINST EARTH ARE SUBJECT TO APPROVAL OF GEOTECHNICAL ENGINEER.
2. FOOTING WIDTHS SHALL NOT BE MORE THAN 4" WIDER THAN SHOWN ON PLAN.
3. FORMWORK NOT PERMITTED BELOW GRADE UNLESS FULLY FORMED.
4. FOUNDATION CONCRETE MAY BE PLACED DIRECTLY INTO NEAT EXCAVATIONS PROVIDED THE FOUNDATION TRENCH WALLS ARE STABLE AS DETERMINED BY THE GEOTECHNICAL ENGINEER. THE MINIMUM FORMWORK SHOWN ON THE DRAWINGS IS MANDATORY TO ENSURE CLEAN EXCAVATIONS IMMEDIATELY PRIOR TO AND DURING THE PLACING OF CONCRETE.
5. CONT CLEAN-OUT STAKES NOT PERMITTED IN THE FTG AREA.
6. AFTER CONCRETE HAS SET, REMOVE LAITANCE AND SCUM.

FOOTING POURED AGAINST EARTH (1 / S-S7-011)

NO SCALE

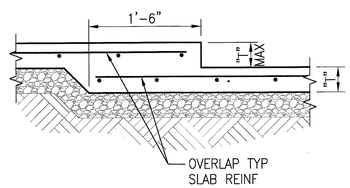

SLAB DEPRESSION

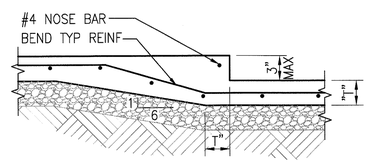

SLAB DEPRESSION ALT

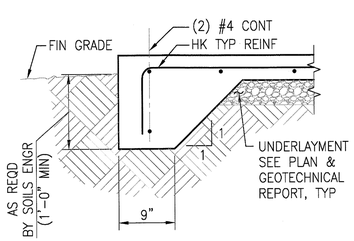

EDGE OF SLAB

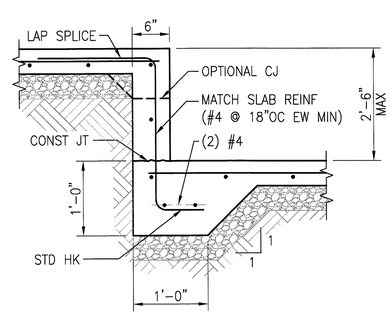

SLAB STEP

SLAB ON GRADE DETAILS (6 / S-S7-011)

NO SCALE

FOR ADDITIONAL DETAIL SEE DRFI 10486.

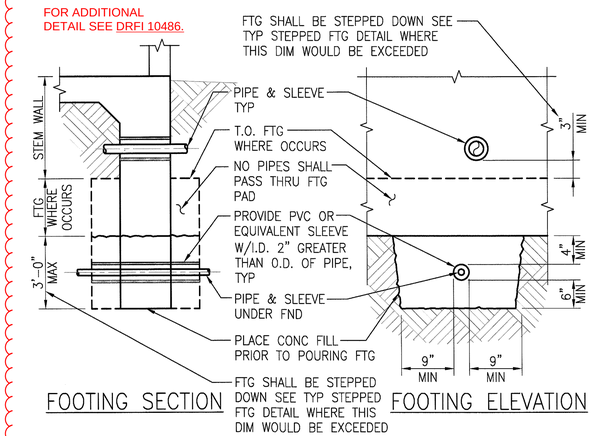

FOOTING SECTION — FOOTING ELEVATION

NOTES:

1. PIPES GREATER THAN 8" IN SIZE, BUNDLES OR BANKS NOT SPECIFICALLY SHOWN ON THE STRUCTURAL PLANS ARE NOT ALLOWED TO BE PLACED WITHOUT OBTAINING EOR APPROVAL.
2. CONTRACTOR SHALL COORDINATE ALL PIPE LOCATION WITH BUILDING FOUNDATION REQUIREMENTS.
3. IF REQUIREMENTS AS SHOWN CANNOT BE MET, STEP FOOTING SEE 5/-.

TYPICAL PIPE THRU STEM WALL OR UNDER FOUNDATION (4 / S-S7-011)

NO SCALE

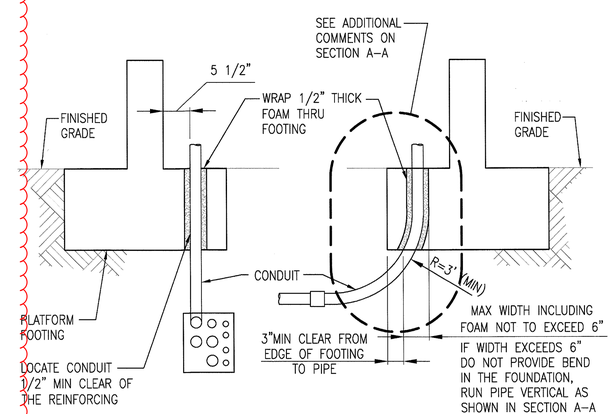

SECTION (A-A) — EAST STUB-UP

SRJV
JUN 24 2013
ISSUED FOR CONSTRUCTION

TYPICAL PIPE PENETRATION IN WALL FOOTING (2 / S-S7-011)

NO SCALE

REV	DATE	BY	APP	REG NO	EXPIRES	SEAL HOLDER	DESCRIPTION
0	5/30/13	FL	KW	2870	9/30/13	KEN WONG	APPROVED FOR CONSTRUCTION

THE PREPARATION OF THIS DRAWING HAS BEEN FINANCED BY THE TAXES OF THE CITIZENS OF LOS ANGELES COUNTY AND OF THE STATE OF CALIFORNIA.

DESIGNED BY D. YOON
DRAWN BY E. RAMIREZ
CHECKED BY D. KATHURIA
IN CHARGE K.WONG
DATE 5/30/13

REGISTERED PROFESSIONAL ENGINEER KENNETH N. WONG No. 2870 Exp. 09/30/13 STRUCTURAL STATE OF CALIFORNIA

Exposition Metro Line Construction Authority
Expo
Exposition Construction Authority Approved for Construction Drawings - AFC
JUN 21 2013

EXPO SKANSKA RADOS
444 South Flower Street Suite 2200 Los Angeles, CA 90071 TEL (213) 443-7463 FAX (213) 362-9481

PARSONS BRINCKERHOFF
miyamoto 700 South Flower Street, Suite 1010 T: (213) 362-7778 www.miyamotointernational.com
MI09026 4.03
CORRECTED PLAN

EXPOSITION LRT PROJECT- PHASE 2
COLORADO/4TH STREET STATION
STRUCTURAL
TYPICAL DETAILS

CONTRACT NO XP8902-002
DRAWING NO S-S7-011
REV 0
SCALE NONE
SHEET NO

I:\2009\MI09026\04.03 Metro Expo Line Phase 2 Stage B\Drawings\1 Structural\07 Colorado_4th Street Station\expo2-S-S7-011.dw
30-May-13 2:36 PM Edgar Ramirez

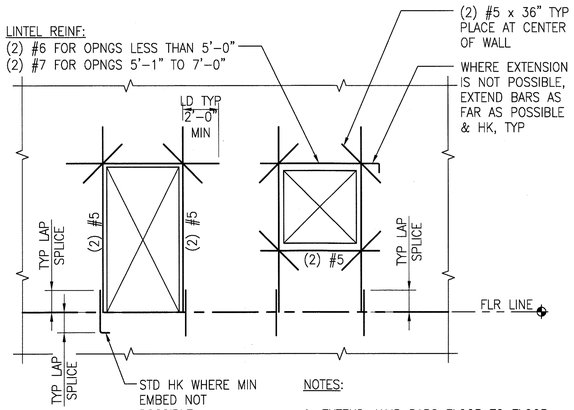

NOTES:

1. EXTEND JAMB BARS FLOOR TO FLOOR, OR FLOOR TO ROOF WHERE OPENING EXCEEDS 48" IN WIDTH.

ELEVATION

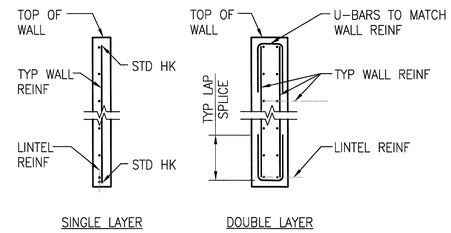

LINTEL AND TOP OF WALL

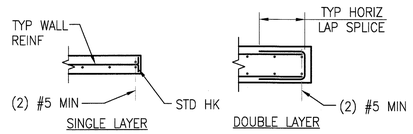

PLAN JAMB OR END OF WALL

TYPICAL MINIMUM REINFORCING AT CONCRETE WALL OPENINGS

NO SCALE

5 / S-S7-012

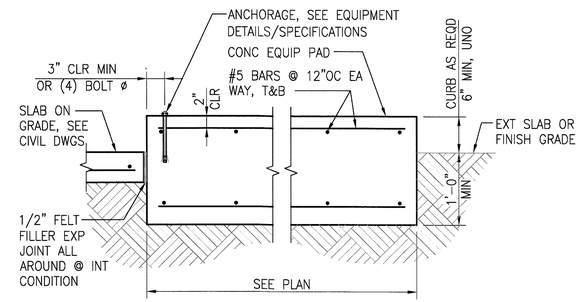

TYPICAL ISOLATED EQUIPMENT PAD

NO SCALE

3 / S-S7-012

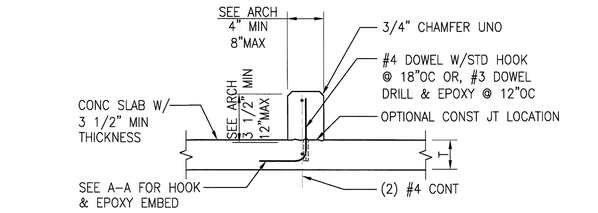

CONCRETE CURB B-B

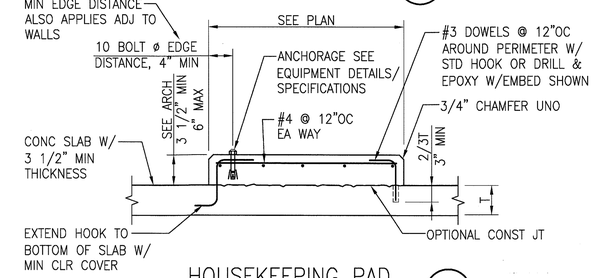

HOUSEKEEPING PAD A-A

CONCRETE PAD AND CURB

NO SCALE

1 / S-S7-012

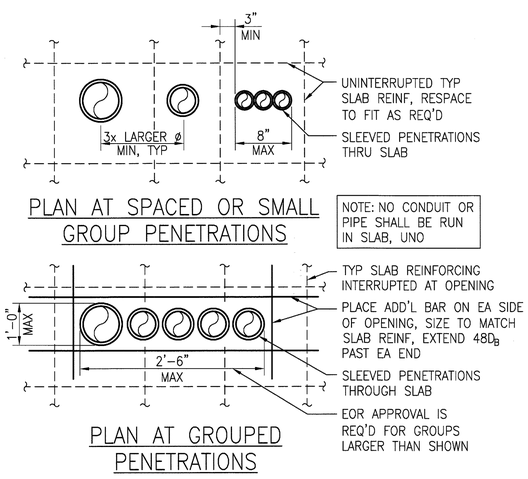

PLAN AT SPACED OR SMALL GROUP PENETRATIONS

NOTE: NO CONDUIT OR PIPE SHALL BE RUN IN SLAB, UNO

PLAN AT GROUPED PENETRATIONS

TYPICAL PIPE & CONDUIT THROUGH SLAB ON GRADE

NO SCALE

7 / S-S7-012

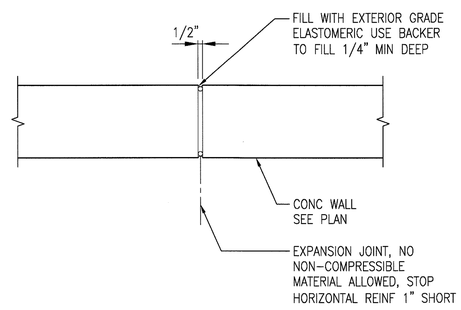

TYPICAL WALL EXPANSION JOINT

NO SCALE

6 / S-S7-012

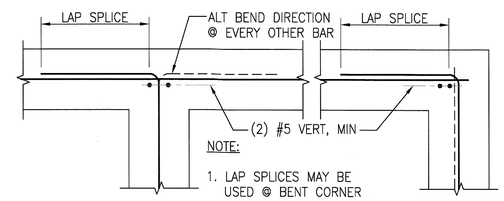

NOTE:

1. LAP SPLICES MAY BE USED @ BENT CORNER BARS, UNO ON PLANS, TYP

ONE LAYER OF REINFORCING

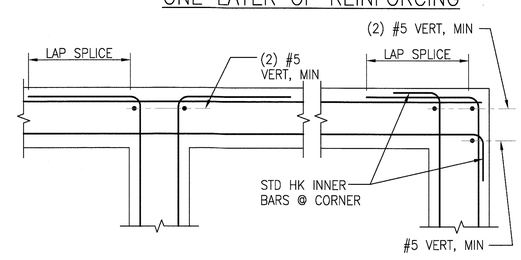

TWO LAYERS OF REINFORCING

PLAN

REINF AT CORNERS AND INTERSECTIONS

NO SCALE

4 / S-S7-012

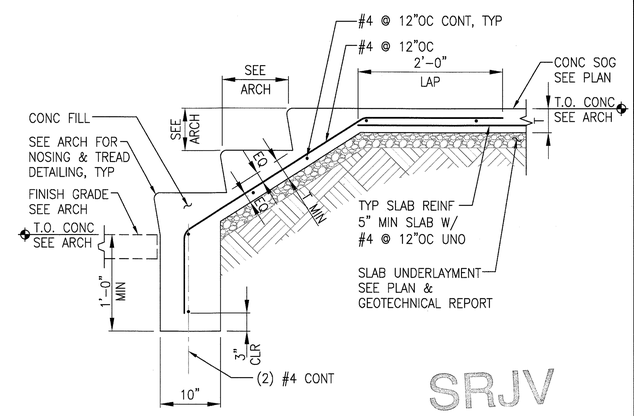

SRJV
JUN 24 2013
ISSUED FOR CONSTRUCTION

TYPICAL STAIR ON GRADE

NO SCALE

2 / S-S7-012

THE PREPARATION OF THIS DRAWING HAS BEEN FINANCED BY THE TAXES OF THE CITIZENS OF LOS ANGELES COUNTY AND OF THE STATE OF CALIFORNIA.

REV	DATE	BY	APP	REG NO	EXPIRES	SEAL HOLDER	DESCRIPTION
0	5/30/13	FL	KW	2870	9/30/13	KEN WONG	APPROVED FOR CONSTRUCTION

DESIGNED BY D. YOON
DRAWN BY E. RAMIREZ
CHECKED BY D. KATHURIA
IN CHARGE K.WONG
DATE 5/30/13

REGISTERED PROFESSIONAL ENGINEER KENNETH N. WONG No. 2870 Exp 09/30/13 STRUCTURAL STATE OF CALIFORNIA

Exposition Metro Line Construction Authority
Expo
Exposition Construction Authority Approved for Construction Drawings - AFC
JUN 21 2013

EXPO SKANSKA RADOS
444 South Flower Street
Suite 2200
Los Angeles, CA 90071
TEL (213) 443-7463
FAX (213) 362-9481

PARSONS BRINCKERHOFF
miyamoto 700 South Flower Street, Suite 1010 Los Angeles, CA 90017 T: (213) 362-7778 F: (213) 362-7779 miyamotointernational.com
M10902064.03

EXPOSITION LRT PROJECT- PHASE 2
COLORADO/4TH STREET STATION
STRUCTURAL
TYPICAL DETAILS

CONTRACT NO XP8902-002
DRAWING NO S-S7-012
REV 0
SCALE NO SCALE
SHEET NO

I:\20090M\M0902064.03 Metro Expo Line Phase 2 Stage B\Drawings\1 Structural\07 Colorado_4th Street Station\expo2-S-S7-012.dw
30-May-13 2:36 PM Edgar Ramirez

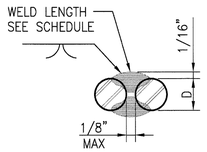

FLARE V- GROOVE WELD (A)

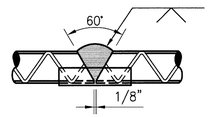

SINGLE V-GROOVE WELD WITH SPLIT PIPE BACKING (B)

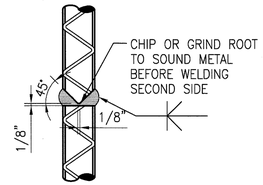

DOUBLE BEVEL GROOVE WELD (C)

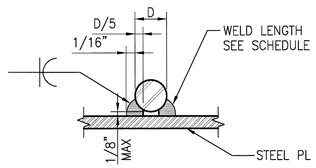

FLARE BEVEL GROOVE WELD (D)

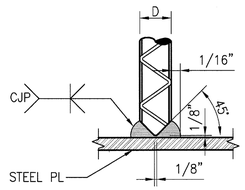

COMPLTETE JOINT PENETRATION GROOVE WELD (E)

WELD SCHEDULE	
BAR SIZE	MIN WELD LENGTH
#3	3"
#4	3"
#5	3"
#6	4"
#7	5"
#8	5"
#9	6"
#10	6"

NOTES:

1. WELDING SHALL BE WITH LOW HYDROGEN ELECTRODES E90XX AND SHALL CONFORM TO AWS-D1.4.
2. ALL WELDING SHALL BE SUBJECT TO CONTINUOUS INSPECTION.
3. REINFORCING BARS TO BE WELDED SHALL MEET THE REQUIREMENT OF ASTM A706.
4. WHEN WELDING WITH STEEL PLATES, THE STEEL WITH THE LOWER TENSILE STRENGTH GOVERNS ELECTRODE SPECIFICATION REQUIREMENT.

REINFORCING BAR WELDING

NO SCALE

3
S-S7-013

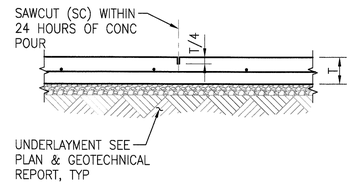

SAWCUT CONTROL JOINT

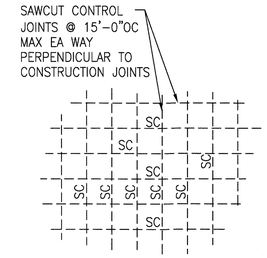

SLAB POUR PLAN

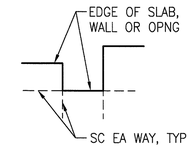

RE-ENTRANT CORNER

NOTES:

1. SEE ARCHITECTURAL PLANS FOR LOCATIONS OF VISUALLY EXPOSED CONTROL JOINTS.
2. FOR POURING SEQUENCE OTHER THAN THAT SHOWN ON THESE PLANS, SUBMIT SHOP DRAWINGS TO SE OR FOR REVIEW 7 DAYS PRIOR TO POUR.

JOINTS IN SLAB ON GRADE

NO SCALE

1
S-S7-013

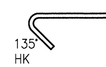

CAP/CROSS TIE

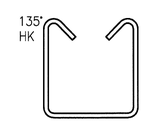

BEAM TIE/STIRRUP

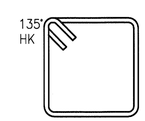

CLOSED TIE/HOOP

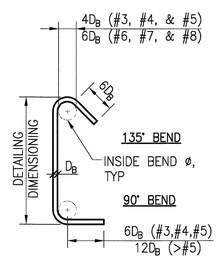

STIRRUP & TIE HOOKS (#8 & SMALLER ONLY)

ROUND HOOP

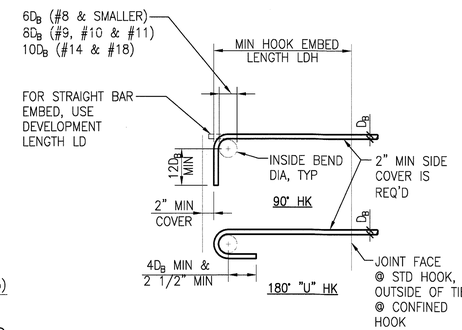

STD & CONFINED HOOKS (NON-STIRRUP/TIE)

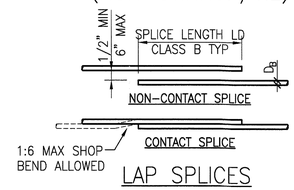

LAP SPLICES

HOOKS, LAPS & DEVELOPMENT LENGTHS							
	BAR SIZE	STD HOOK LDH (IN)	CONFINED HOOK LDG (IN)	CLASS B LAP SPLICE LD (IN)		DEVELOPMENT LENGTH LD (IN)	
				BOTT	TOP	BOTT	TOP
4000 PSI NWC	#3	6	6	19	24	15	19
	#4	7	6	25	32	19	25
	#5	9	7	31	40	24	31
	#6	10	8	37	48	29	37
	#7	12	10	54	70	42	54
	#8	14	11	62	80	48	62
	#9	15	12	70	91	54	70
	#10	17	14	79	102	61	79
	#11	19	15	87	113	67	87

NOTES:

1. L_{dh} – HOOK DEVELOPMENT LENGTH.
2. L_d – DEVELOPMENT LENGTH.
3. SEE BUILDING CODE AND ACI LATEST VERSION FOR ALL REQUIREMENTS NOT NOTED.
4. FOR LIGHTWEIGHT CONCRETE MULTIPLY L_{dh} AND L_d VALUES SHOWN BY 1.3.
5. "TOP" BARS ARE HORIZONTAL WITH MORE THAN 12" OF FRESH CONCRETE CAST BELOW BARS. ALL OTHER BARS ARE "BOTTOM" BARS.
6. STANDARD HOOK L_{dh} DOES NOT ACCOUNT FOR THE EFFECT OF TIES. CONFINED HOOK L_{dh} MAY BE USED WHERE ACI 318-05 12.5.3b-c APPLIES.
7. VALUES SHOWN ABOVE ARE FOR GRADE 60.
8. (FY=60 KSI) REINFORCEMENT.
9. SPLICE LENGTHS SHOWN ARE FOR CLEAR SPACING NOT LESS THAN $2D_b$, CONCRETE COVER NOT LESS THAN D_b.
10. FOR EPOXY-COATED REINFORCEMENT, SEE BUILDING CODE.
11. WHERE BARS OF DIFFERENT SIZES ARE SPLICED, SPLICE LENGTH SHALL BE BASED ON THE SIZE OF THE LARGER BAR.

SRJV
JUN 24 2013
ISSUED FOR CONSTRUCTION

STANDARD HOOK AND LAP SPLICE DEVELOPMENT LENGTH

NO SCALE

2
S-S7-013

THE PREPARATION OF THIS DRAWING HAS BEEN FINANCED BY THE TAXES OF THE CITIZENS OF LOS ANGELES COUNTY AND OF THE STATE OF CALIFORNIA.

REV	DATE	BY	APP	REG NO	EXPIRES	SEAL HOLDER	DESCRIPTION
0	5/30/13	FL	KW	2870	9/30/13	KEN WONG	APPROVED FOR CONSTRUCTION

DESIGNED BY D. YOON
DRAWN BY E. RAMIREZ
CHECKED BY D. KATHURIA
IN CHARGE K.WONG
DATE 5/30/13

REGISTERED PROFESSIONAL ENGINEER KENNETH N. WONG No. 2870 Exp 09/30/13 STRUCTURAL STATE OF CALIFORNIA

Exposition Metro Line Construction Authority
Expo
Exposition Construction Authority Approved for Construction Drawings - AFC
JUN 21 2013
CORRECTED COPY

EXPO SKANSKA RADOS
444 South Flower Street
Suite 2200
Los Angeles, CA 90071
TEL (213) 443-7463
FAX (213) 362-9481

PARSONS BRINCKERHOFF
miyamoto 700 South Flower Street, Suite 1010 T: (213) 362-7778 Los Angeles, CA 90017 www.miyamotointernational.com
MI0902064.03

EXPOSITION LRT PROJECT- PHASE 2
COLORADO/4TH STREET STATION
STRUCTURAL
TYPICAL DETAILS

CONTRACT NO XP8902-002
DRAWING NO S-S7-013
REV 0
SCALE NO SCALE
SHEET NO

I:\2009\M\09020P4-03 Metro Expo Line Phase 2 Stage B\Drawings\1 Structural\07 Colorado 4th Street Station\expo2-S-S7-013.dw
30-May-13 2:38 PM Edgar Ramirez

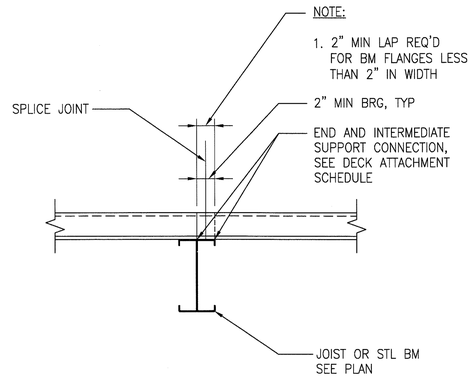

TYPICAL METAL DECK CONNECTION

NO SCALE

4 / S-S7-014

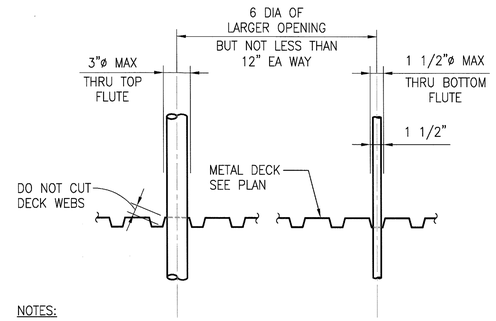

NOTES:

1. IF OPENINGS ARE CLOSER OR LARGER THAN SHOWN, REINFORCE DECK SEE 2/-

PIPE PENETRATIONS AT DECK

NO SCALE

3 / S-S7-014

METAL DECK SCHEDULE						
DECK PROPERTIES						
DESIG.	DEPTH (IN)	TYPE	GAGE	I (IN^4/FT)	S_{TOP} (IN^3/FT)	S_{BOT} (IN^3/FT)
D-1	1 1/2	B	20	0.231	0.233	0.244

DECK ATTACHMENTS			
DESIG.	ENDS & INTERMEDIATE SUPPORTS	LONGITUDINAL SUPPORTS AND MEMBERS PARALLEL TO FLUTES	SIDE SEAMS
A	36/4 #12-14x3/4" TEKS SCREWS PATTERN (4 SCREWS PER SHEET)	#12-14x3/4" TEKS SCREWS @ 12"OC	#12-14x3/4" TEKS SCREWS @ 12"OC
B	36/7-3/4"ø PUDDLE* WELD PATTERN (7 WELDS PER SHEET)	3/4"ø PUDDLE* WELDS @ 12"OC	BUTTON PUNCH @ 12"OC
C	36/5 #12-14x3/4" SCREWS PATTERN (5 SCREWS PER SHEET)	#12-14x3/4" SCREWS @ 12"OC	VERCO SIDELAP CONNECTION @ 12"OC

* 3/4"ø PUDDLE WELDS SHALL HAVE AN EFFECTIVE FUSION AREA OF 1/2"ø.

METAL DECK SCHEDULE

NO SCALE

1 / S-S7-014

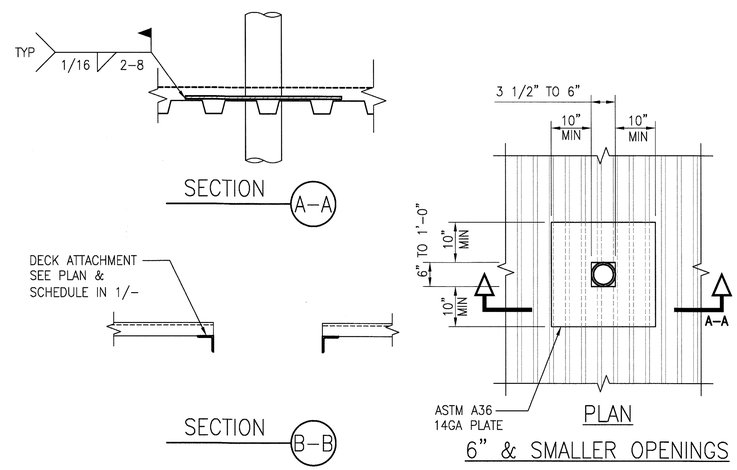

NOTES:

1. SEE PIPE PENETRATIONS AT DECK DETAIL 3/- FOR SPACING LIMITATIONS.

SRJV
JUN 24 2013
ISSUED FOR CONSTRUCTION

TYPICAL OPENING IN METAL DECK

NO SCALE

2 / S-S7-014

THE PREPARATION OF THIS DRAWING HAS BEEN FINANCED BY THE TAXES OF THE CITIZENS OF LOS ANGELES COUNTY AND OF THE STATE OF CALIFORNIA.

REV	DATE	BY	APP	REG NO	EXPIRES	SEAL HOLDER	DESCRIPTION
0	5/30/13	FL	KW	2870	9/30/13	KEN WONG	APPROVED FOR CONSTRUCTION

DESIGNED BY D. YOON
DRAWN BY E. RAMIREZ
CHECKED BY D. KATHURIA
IN CHARGE K.WONG
DATE 5/30/13

REGISTERED PROFESSIONAL ENGINEER KENNETH N. WONG No. 2870 Exp. 09/30/13 STRUCTURAL STATE OF CALIFORNIA

Exposition Metro Line Construction Authority
Expo
Exposition Construction Authority Approved for Construction Drawings - AFC
JUN 21 2013

EXPO SKANSKA RADOS
444 South Flower Street Suite 2200 Los Angeles, CA 90071 TEL (213) 443-7463 FAX (213) 362-9481

PARSONS BRINCKERHOFF
miyamoto 750 South Flower Street, Suite 1010 Los Angeles, CA 90017 T: (213) 362-7778 miyamotointernational.com
MI0902064.03

EXPOSITION LRT PROJECT- PHASE 2
COLORADO/4TH STREET STATION
STRUCTURAL
TYPICAL DETAILS

CONTRACT NO XP8902-002
DRAWING NO S-S7-014 REV 0
SCALE NO SCALE
SHEET NO

I:\09020064.03 Metro Expo Line Phase 2 Stage B\Drawings\1 Structural\07 Colorado_4th Street Station\expo2-S-S7-014.dwg
30-May-13 2:36 PM Edgar Ramirez

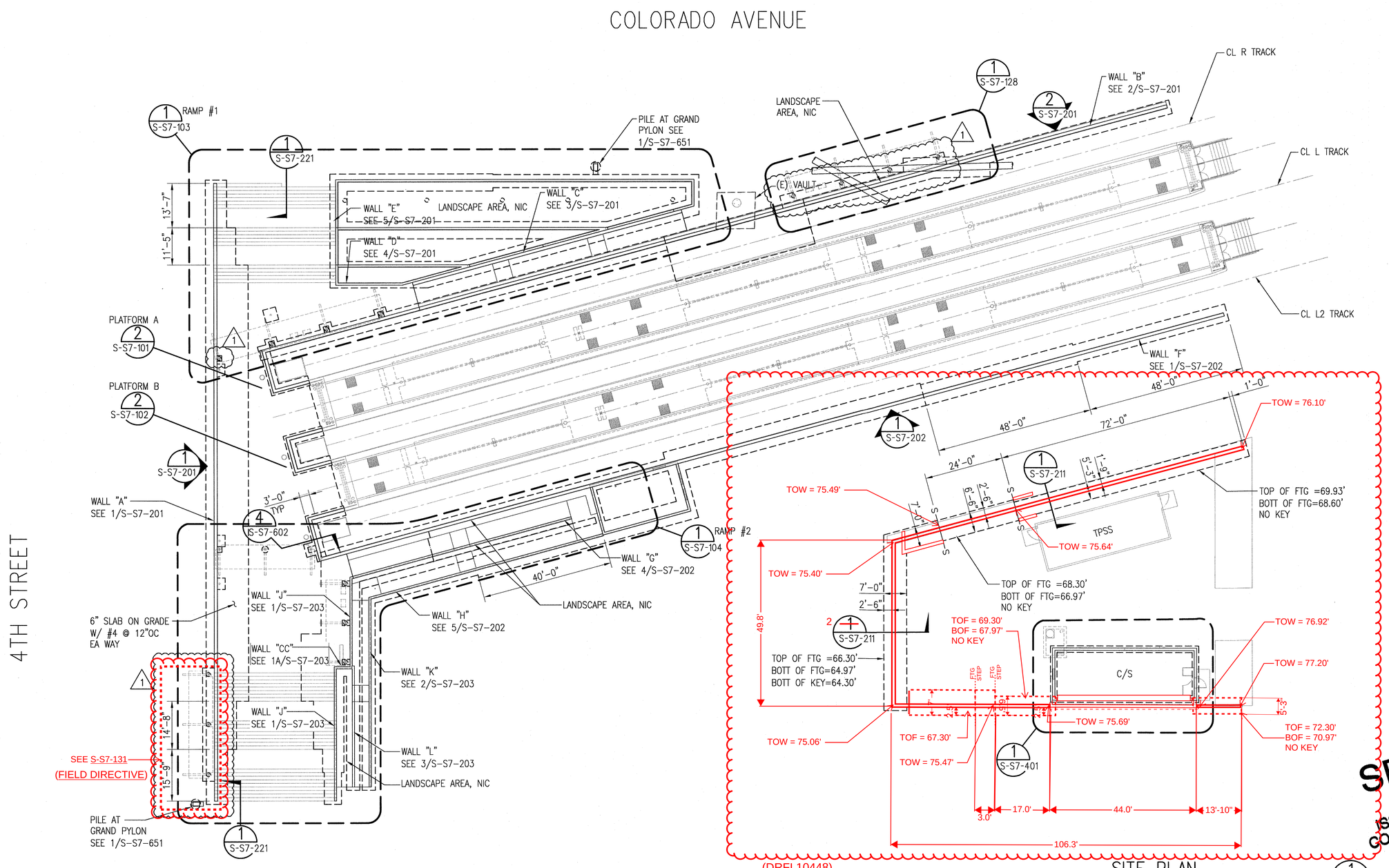

SITE PLAN
1/16"=1'-0"
1 S-S7-100

SRJV
MAR 03 2014
ISSUED FOR CONSTRUCTION

THE PREPARATION OF THIS DRAWING HAS BEEN FINANCED BY THE TAXES OF THE CITIZENS OF LOS ANGELES COUNTY AND OF THE STATE OF CALIFORNIA.

REV	DATE	BY	APP	REG NO	EXPIRES	SEAL HOLDER	DESCRIPTION
1	1/8/14	FL	KW	2870	9/30/13	KEN WONG	ECI 79
0	5/30/13	FL	KW	2870	9/30/13	KEN WONG	APPROVED FOR CONSTRUCTION

DESIGNED BY D. YOON
DRAWN BY E. RAMIREZ
CHECKED BY D. KATHURIA
IN CHARGE K.WONG
DATE 5/30/13

REGISTERED PROFESSIONAL ENGINEER KENNETH N. WONG No. 2870 STRUCTURAL STATE OF CALIFORNIA 9/30/13

Exposition Metro Line Construction Authority
Expo
Exposition Construction Authority Approved for Construction Drawings - AFC
FEB 28 2014

EXPO SKANSKA RADOS
444 South Flower Street
Suite 2200
Los Angeles, CA 90071
TEL (213) 443-7463
FAX (213) 362-9481

PARSONS BRINCKERHOFF
miyamoto. 700 South Flower Street, Suite 1010 Los Angeles, CA 90017 T: (213) 362-7778 miyamotointernational.com
MI0902064.05

CURRENT STATUS

EXPOSITION LRT PROJECT- PHASE 2
COLORADO/4TH STREET STATION
STRUCTURAL
SITE PLAN

CONTRACT NO XP8902-002
DRAWING NO S-S7-100
REV 1
SCALE 1/16"=1'-0"
SHEET NO

I:\2009\MI0902064.05 Metro Expo Line Phase 2 Stage B -4th/Colorado Stn Add Canopies\Drawings\exp02-S-S7-100.dwg
7-Jan-14
1:19 PM
Edgar Ramirez

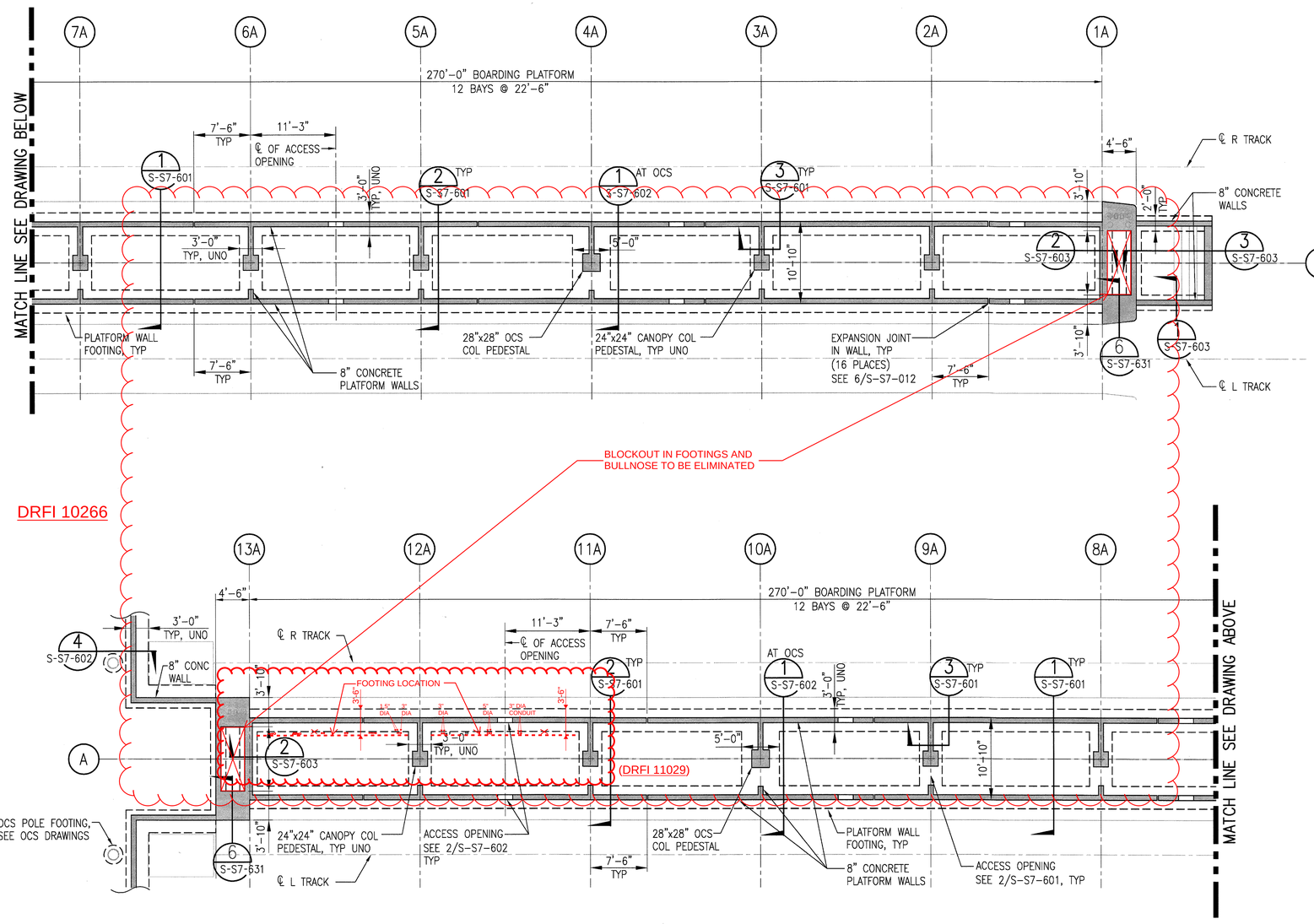

DRFI 10266

FOUNDATION PLAN
PLATFORM A
1/8"=1'-0"
1 S-S7-101

FOUNDATION PLAN
PLATFORM A (CONT)
1/8"=1'-0"
2 S-S7-101

SRJV
JUN 24 2013
ISSUED FOR CONSTRUCTION

THE PREPARATION OF THIS DRAWING HAS BEEN FINANCED BY THE TAXES OF THE CITIZENS OF LOS ANGELES COUNTY AND OF THE STATE OF CALIFORNIA.

REV	DATE	BY	APP	REG NO	EXPIRES	SEAL HOLDER	DESCRIPTION
0	5/30/13	FL	KW	2870	9/30/13	KEN WONG	APPROVED FOR CONSTRUCTION

DESIGNED BY D. YOON
DRAWN BY E. RAMIREZ
CHECKED BY D. KATHURIA
IN CHARGE K.WONG
DATE 5/30/13

REGISTERED PROFESSIONAL ENGINEER KENNETH N. WONG No. 2870 Exp 09/30/13 STRUCTURAL STATE OF CALIFORNIA

Exposition Metro Line Construction Authority
Expo
Exposition Construction Authority Approved for Construction Drawings - AFC
JUN 21 2013
EXPO SKANSKA RADOS
444 South Flower Street Suite 2200 Los Angeles, CA 90071 TEL (213) 443-7463 FAX (213) 362-9481
PARSONS BRINCKERHOFF
miyamoto 700 South Flower Street, Suite 1010 Los Angeles, CA 90017 T: (213) 362-7778 www.miyamotointernational.com
MI0902064.03
CONFORMED COPY

EXPOSITION LRT PROJECT- PHASE 2
COLORADO/4TH STREET STATION
STRUCTURAL
FOUNDATION PLAN
PLATFORM A

CONTRACT NO XP8902-002
DRAWING NO S-S7-101
REV 0
SCALE 1/8"=1'-0"
SHEET NO

I:\2009\MI0902064.03 Metro Expo Line Phase 2 Stage 8\Drawings\1 Structural\07 Colorado 4th Street Station\expo2-S-S7-101.dw
30-May-13 2:36 PM Edgar Ramirez

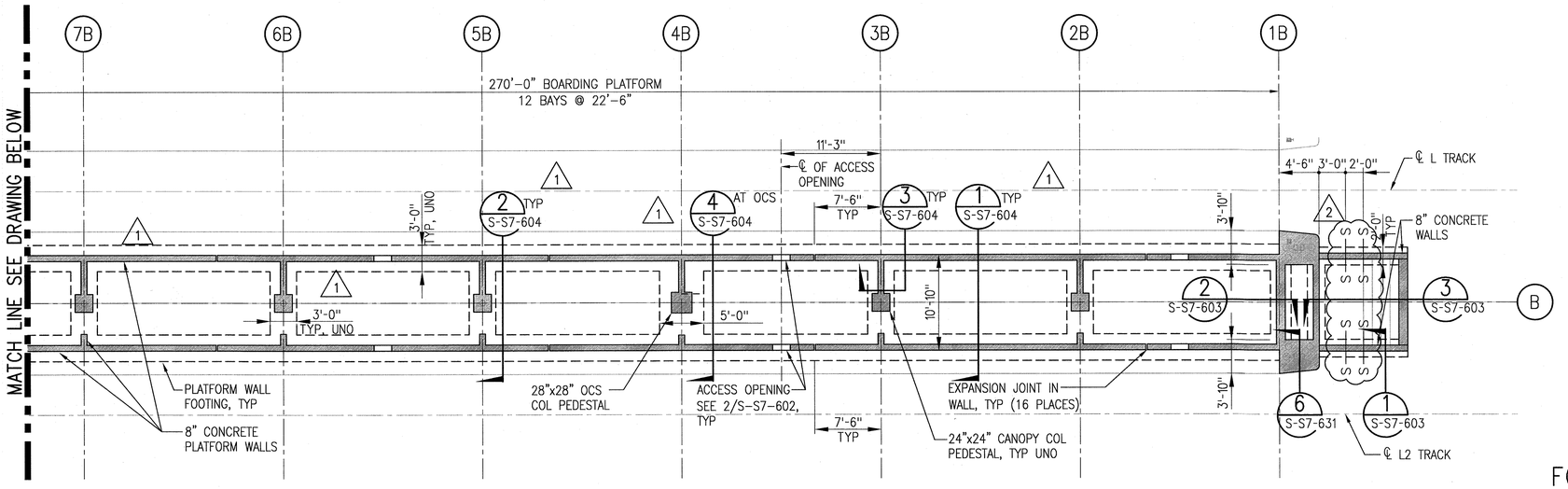

FOUNDATION PLAN
PLATFORM B

1/8"=1'-0"

1 S-S7-102

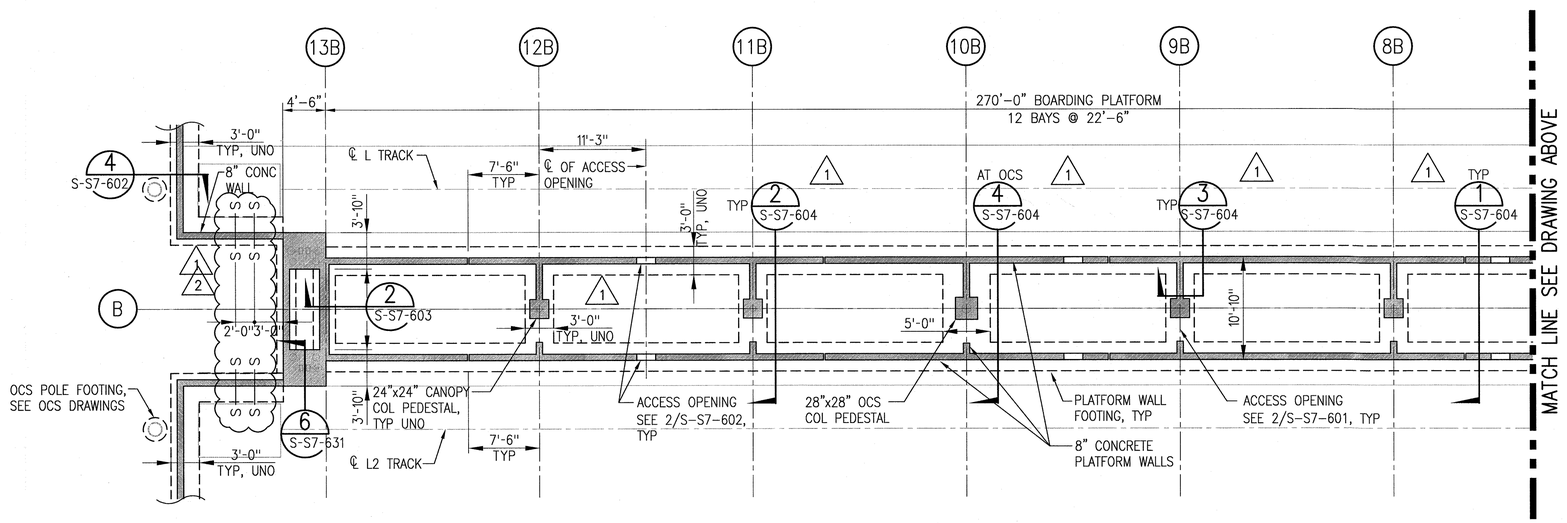

NOTE:

S —— S INDICATES STEP IN BOTTOM OF FOOTING SEE 5/S-S7-011 UNO.

FOUNDATION PLAN
PLATFORM B (CONT)

1/8"=1'-0"

2 S-S7-102

Exposition Construction Authority
Approved for Construction
Drawings - AFC
MAR 20 2014

SRJV
MAR 25 2014
ISSUED FOR CONSTRUCTION

THE PREPARATION OF THIS DRAWING HAS BEEN FINANCED BY THE TAXES OF THE CITIZENS OF LOS ANGELES COUNTY AND OF THE STATE OF CALIFORNIA.

REV	DATE	BY	APP	REG NO	EXPIRES	SEAL HOLDER	DESCRIPTION
2	12/19/13	FL	KW	2870	9/30/13	KEN WONG	ECI 43
1	7/30/13	FL	KW	2870	9/30/13	KEN WONG	ECI 17
0	5/30/13	FL	KW	2870	9/30/13	KEN WONG	APPROVED FOR CONSTRUCTION

DESIGNED BY D. YOON
DRAWN BY E. RAMIREZ
CHECKED BY D. KATHURIA
IN CHARGE K.WONG
DATE 12/19/13

REGISTERED PROFESSIONAL ENGINEER KENNETH N. WONG No. 2870 Exp 09/30/13 STRUCTURAL STATE OF CALIFORNIA

Exposition Metro Line Construction Authority
Expo

EXPO SKANSKA RADOS

444 South Flower Street
Suite 2200
Los Angeles, CA 90071
TEL (213) 443-7463
FAX (213) 362-9481

PARSONS BRINCKERHOFF

miyamoto. 700 South Flower Street, Suite 1010 T: (213) 362-7778 Los Angeles, CA 90017 miyamotointernational.com
MI0902064.05

CURRENT STATUS

EXPOSITION LRT PROJECT- PHASE 2
COLORADO/4TH STREET STATION
STRUCTURAL
FOUNDATION PLAN
PLATFORM B

CONTRACT NO XP8902-002
DRAWING NO S-S7-102
REV 2
SCALE 1/8"=1'-0"
SHEET NO

I:\2006\MI\09020\64.05 Metro Expo Line Phase 2 Stage B 4th\Colorado Stn Add Canopies\Drawings\exp02-S-S7-102 ECI43.dwg
19-Dec-13
4:59 PM
Edgar Ramirez

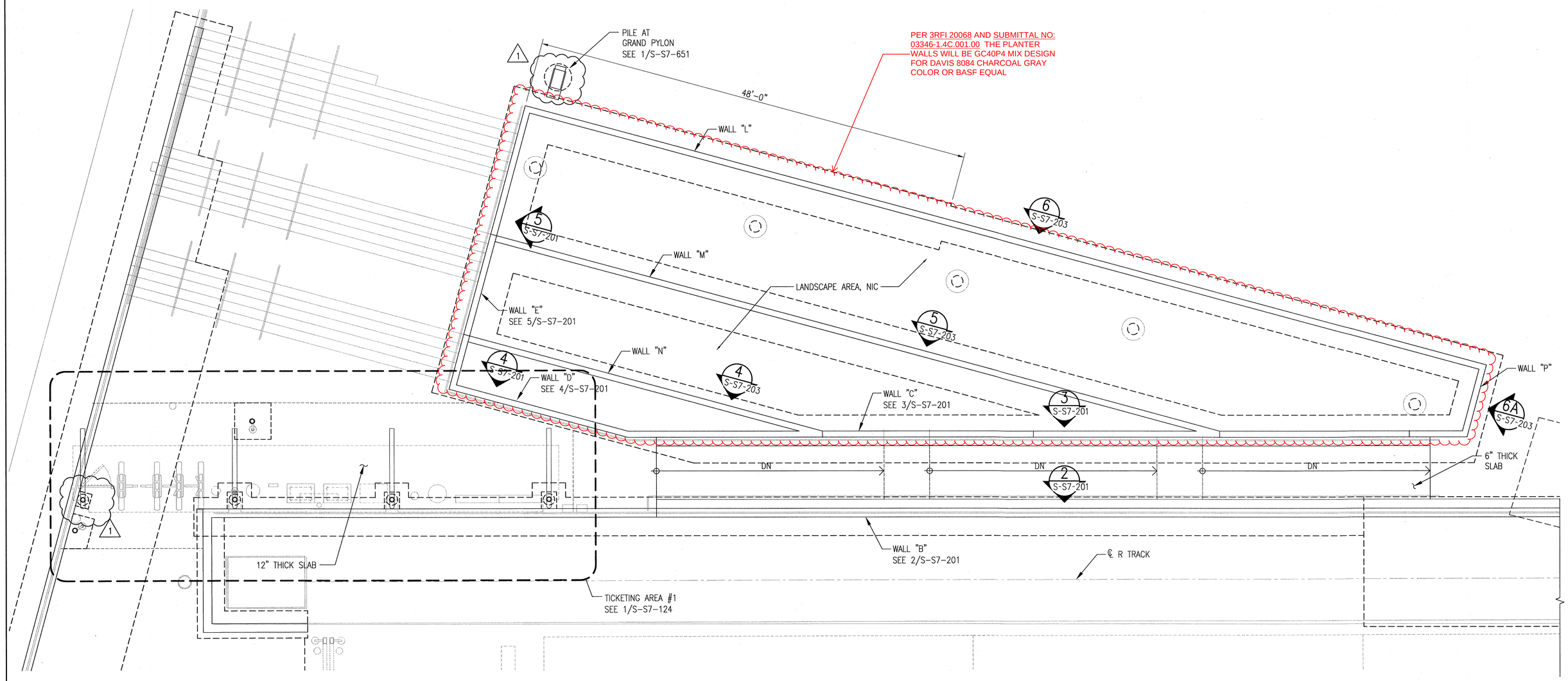

SRJV
MAR 03 2014
ISSUED FOR CONSTRUCTION

ENLARGED RAMP #1

3/16"=1'-0"

1 S-S7-103

THE PREPARATION OF THIS DRAWING HAS BEEN FINANCED BY THE TAXES OF THE CITIZENS OF LOS ANGELES COUNTY AND OF THE STATE OF CALIFORNIA.

REV	DATE	BY	APP	REG NO	EXPIRES	SEAL HOLDER	DESCRIPTION
1	2/26/14	FL	KW	2870	9/30/15	KEN WONG	ECI 79
0	1/8/14	FL	KW	2870	9/30/15	KEN WONG	ECI 79

DESIGNED BY D. YOON
DRAWN BY E. RAMIREZ
CHECKED BY D. KATHURIA
IN CHARGE K.WONG
DATE 1/8/14

REGISTERED PROFESSIONAL ENGINEER KENNETH N. W. WONG No. 2870 Exp. 09/30/15 STRUCTURAL STATE OF CALIFORNIA

Exposition Metro Line Construction Authority
Expo
Exposition Construction Authority
Approved for Construction
Drawings - AFC
FEB 28 2014

EXPO SKANSKA RADOS
444 South Flower Street
Suite 2200
Los Angeles, CA 90071
TEL (213) 443-7463
FAX (213) 362-9481

PARSONS BRINCKERHOFF
miyamoto. 700 South Flower Street, Suite 1010 Los Angeles, CA 90017 T: (213) 362-7778 miyamotointernational.com
MI0902064.05
CURRENT STATUS

EXPOSITION LRT PROJECT- PHASE 2
COLORADO/4TH STREET STATION
STRUCTURAL
ENLARGED TICKETING AREA AND RAMP PLANS

CONTRACT NO XP8902-002
DRAWING NO S-S7-103
REV 1
SCALE 3/16"=1'-0"
SHEET NO

I:\20091\MI0902064.05 Metro Expo Line Phase 2 Stage B -4thColorado Stn Add Canopies\Drawings\expo2-S-S7-103.dwg
26-Feb-14 9:59 AM Eric Ramos

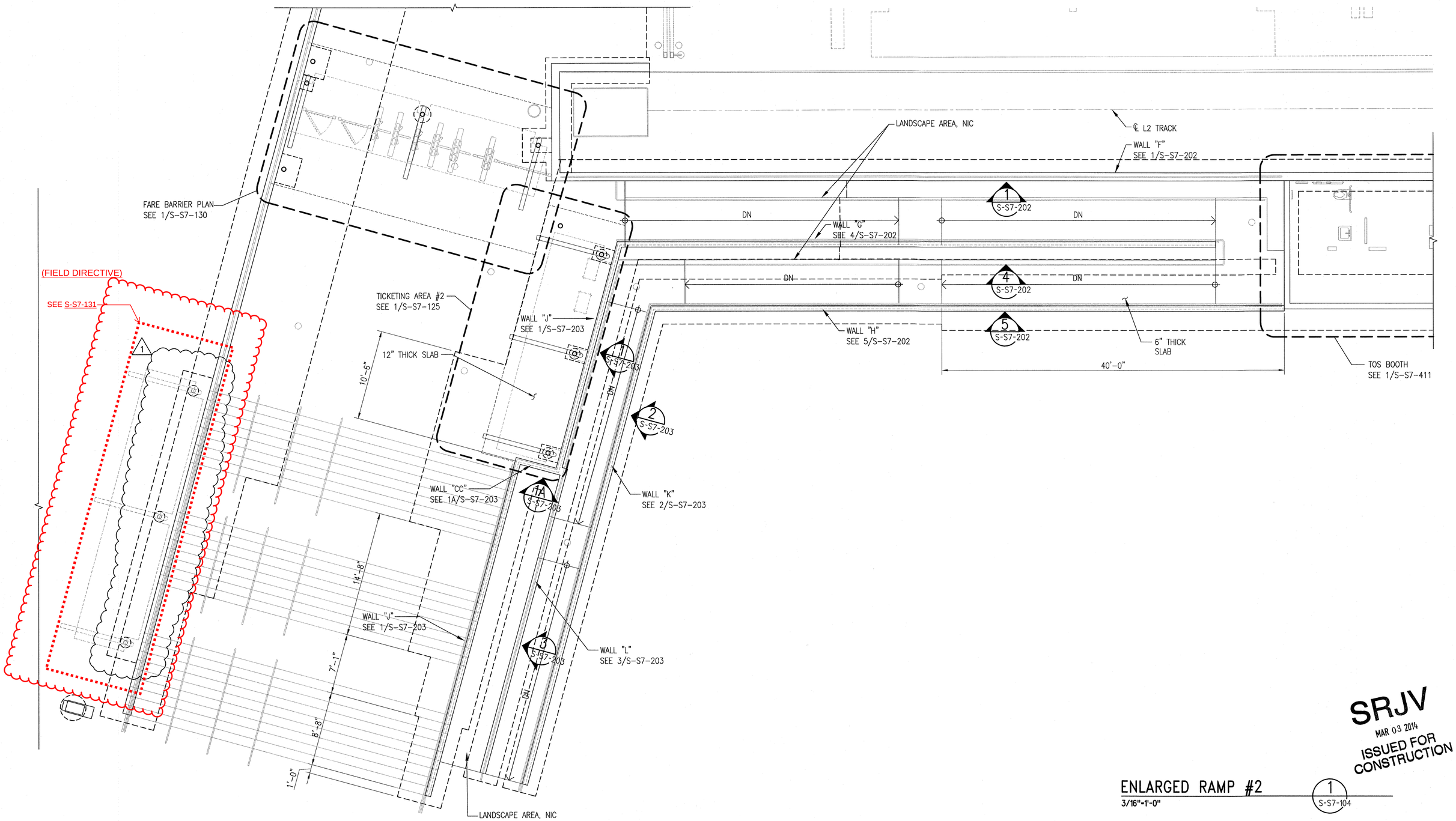

SRJV
MAR 03 2014
ISSUED FOR CONSTRUCTION

ENLARGED RAMP #2

3/16"=1'-0"

1
S-S7-104

REV	DATE	BY	APP	REG NO	EXPIRES	SEAL HOLDER	DESCRIPTION
1	1/8/14	FL	KW	2870	9/30/13	KEN WONG	ECI 79
0	5/30/13	FL	KW	2870	9/30/13	KEN WONG	APPROVED FOR CONSTRUCTION

THE PREPARATION OF THIS DRAWING HAS BEEN FINANCED BY THE TAXES OF THE CITIZENS OF LOS ANGELES COUNTY AND OF THE STATE OF CALIFORNIA.

DESIGNED BY D. YOON
DRAWN BY E. RAMIREZ
CHECKED BY D. KATHURIA
IN CHARGE K.WONG
DATE 5/30/13

REGISTERED PROFESSIONAL ENGINEER KENNETH N. WONG No. 2870 Exp 09/30/13 STRUCTURAL STATE OF CALIFORNIA

Exposition Metro Line Construction Authority
Expo
Exposition Construction Authority
Approved for Construction
Drawings - AFC
FEB 28 2014

EXPO SKANSKA RADOS

444 South Flower Street
Suite 2200
Los Angeles, CA 90071
TEL (213) 443-7463
FAX (213) 362-9481

PARSONS BRINCKERHOFF

miyamoto. 700 South Flower Street, Suite 1010 Los Angeles, CA 90017 T: (213) 362-7778 miyamotointernational.com
MI0902064.05

CURRENT STATUS

EXPOSITION LRT PROJECT- PHASE 2
COLORADO/4TH STREET STATION
STRUCTURAL
ENLARGED TICKETING AREA AND RAMP PLANS

CONTRACT NO XP8902-002
DRAWING NO S-S7-104
REV 1
SCALE 3/16"=1'-0"
SHEET NO

I:\2009\MI0902064.05 Metro Expo Line Phase 2 Stage B -4thColorado Stn Add Canopies\Drawings\expo2-S-S7-104.dwg
7-Jan-14
1:19 PM
Edgar Ramirez

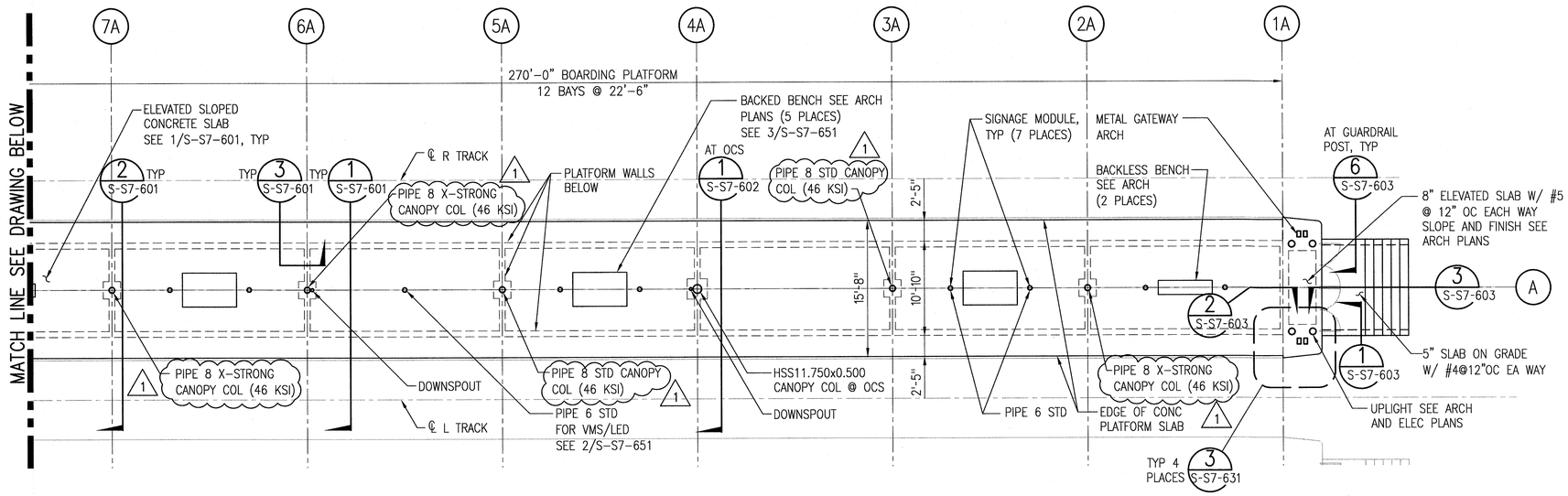

PLATFORM PLAN

1/8"=1'-0"

1 S-S7-111

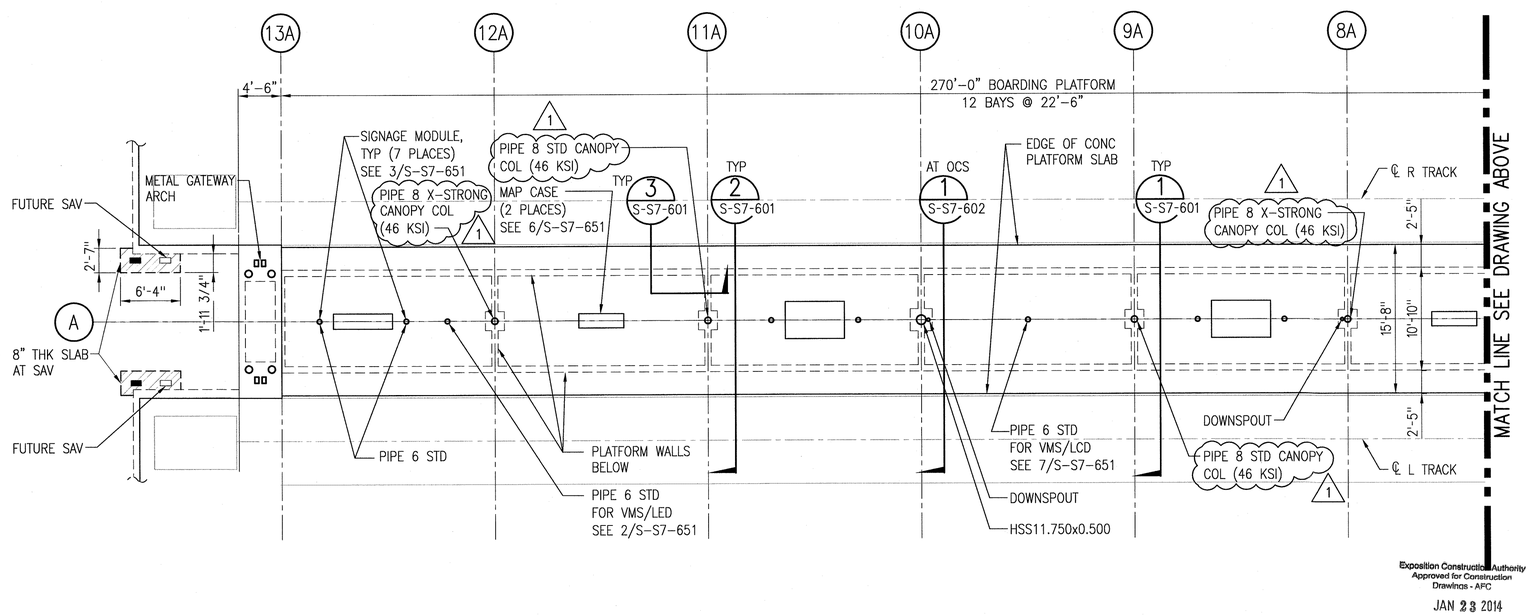

Exposition Construction Authority
Approved for Construction
Drawings - AFC
JAN 23 2014

SRJV
JAN 24 2014
ISSUED FOR CONSTRUCTION

PLATFORM PLAN (CONT)

1/8"=1'-0"

2 S-S7-111

THE PREPARATION OF THIS DRAWING HAS BEEN FINANCED BY THE TAXES OF THE CITIZENS OF LOS ANGELES COUNTY AND OF THE STATE OF CALIFORNIA.

REV	DATE	BY	APP	REG NO	EXPIRES	SEAL HOLDER	DESCRIPTION
1	7/30/13	FL	KW	2870	9/30/13	KEN WONG	ECI 17
0	5/30/13	FL	KW	2870	9/30/13	KEN WONG	APPROVED FOR CONSTRUCTION

DESIGNED BY D. YOON
DRAWN BY E. RAMIREZ
CHECKED BY D. KATHURIA
IN CHARGE K.WONG
DATE 5/30/13

REGISTERED PROFESSIONAL ENGINEER KENNETH N. WONG No. 2870 Exp 09/30/13 STRUCTURAL STATE OF CALIFORNIA

Exposition Metro Line Construction Authority
Expo

EXPO SKANSKA RADOS

444 South Flower Street
Suite 2200
Los Angeles, CA 90071
TEL (213) 443-7463
FAX (213) 362-9481

PARSONS BRINCKERHOFF

miyamoto. 700 South Flower Street, Suite 1010 Los Angeles, CA 90017 T: (213) 362-7778 miyamotointernational.com
MI0902064.03

CURRENT STATUS

EXPOSITION LRT PROJECT- PHASE 2
COLORADO/4TH STREET STATION
STRUCTURAL
PLATFORM PLAN
PLATFORM A

CONTRACT NO XP8902-002
DRAWING NO S-S7-111
REV 0
SCALE 1/8"=1'-0"
SHEET NO

I:\20091M\09\02064.03 Metro Expo Line Phase 2 Stage 6\Drawings\1 Structural\07 Colorado_4th Street Station\expo2-S-S7-111.dw
18-Sep-13 3:26 PM Eric Ramos

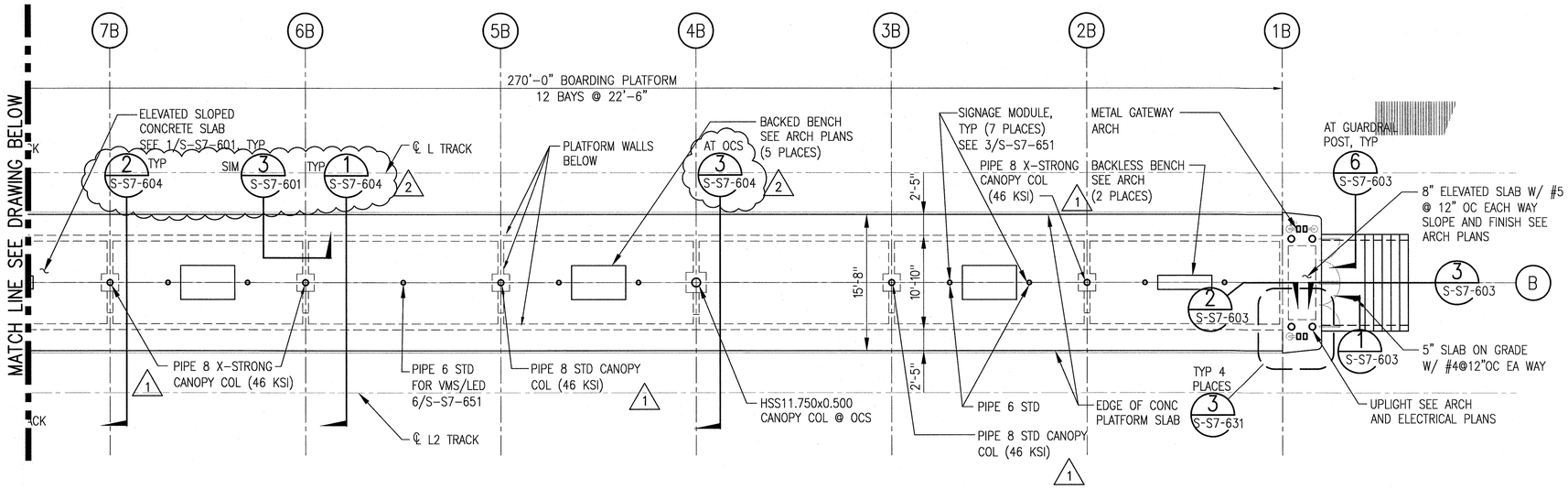

PLATFORM PLAN (1 / S-S7-112)

1/8"=1'-0"

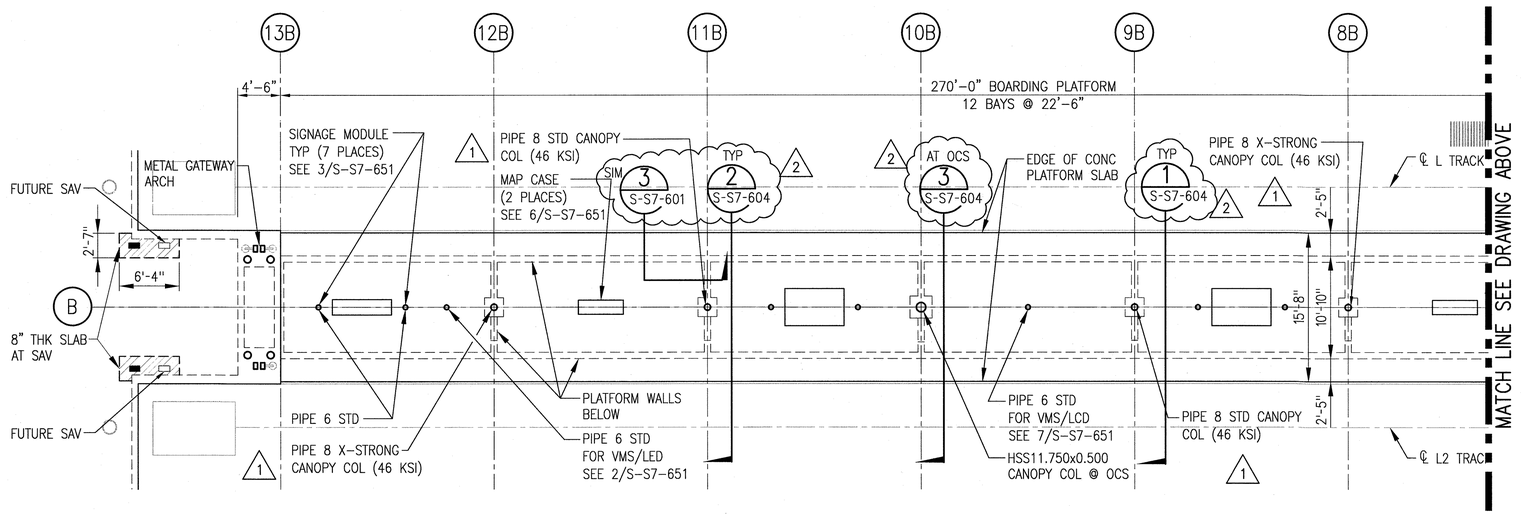

PLATFORM PLAN (CONT) (2 / S-S7-112)

1/8"=1'-0"

SRJV
MAR 25 2014
ISSUED FOR CONSTRUCTION

Exposition Construction Authority
Approved for Construction
Drawings - AFC
MAR 20 2014

THE PREPARATION OF THIS DRAWING HAS BEEN FINANCED BY THE TAXES OF THE CITIZENS OF LOS ANGELES COUNTY AND OF THE STATE OF CALIFORNIA.

REV	DATE	BY	APP	REG NO	EXPIRES	SEAL HOLDER	DESCRIPTION
2	12/19/13	FL	KW	2870	9/30/13	KEN WONG	ECI 43
1	7/30/13	FL	KW	2870	9/30/13	KEN WONG	ECI 17
0	5/30/13	FL	KW	2870	9/30/13	KEN WONG	APPROVED FOR CONSTRUCTION

DESIGNED BY D. YOON
DRAWN BY E. RAMIREZ
CHECKED BY D. KATHURIA
IN CHARGE K.WONG
DATE 12/19/13

REGISTERED PROFESSIONAL ENGINEER KENNETH N. WONG No. 2870 Exp 09/30/13 STRUCTURAL STATE OF CALIFORNIA

Exposition Metro Line Construction Authority
Expo

EXPO SKANSKA RADOS

444 South Flower Street
Suite 2200
Los Angeles, CA 90071
TEL (213) 443-7463
FAX (213) 362-9481

PARSONS BRINCKERHOFF

miyamoto
700 South Flower Street, Suite 1010 T: (213) 362-7778
Los Angeles, CA 90017 miyamotointernational.com
MI0902064.05

CURRENT STATUS

EXPOSITION LRT PROJECT- PHASE 2
COLORADO/4TH STREET STATION
STRUCTURAL
PLATFORM PLAN
PLATFORM B

CONTRACT NO XP8902-002
DRAWING NO S-S7-112
REV 2
SCALE 1/8"=1'-0"
SHEET NO

I:\20091M\09020064.05 Metro Expo Line Phase 2 Stage B 4th\Colorado Stn Add Canopies\Drawings\expo\2-S-S7-112 EC043.dwg
19-Dec-13
4:59 PM
Edgar Ramirez

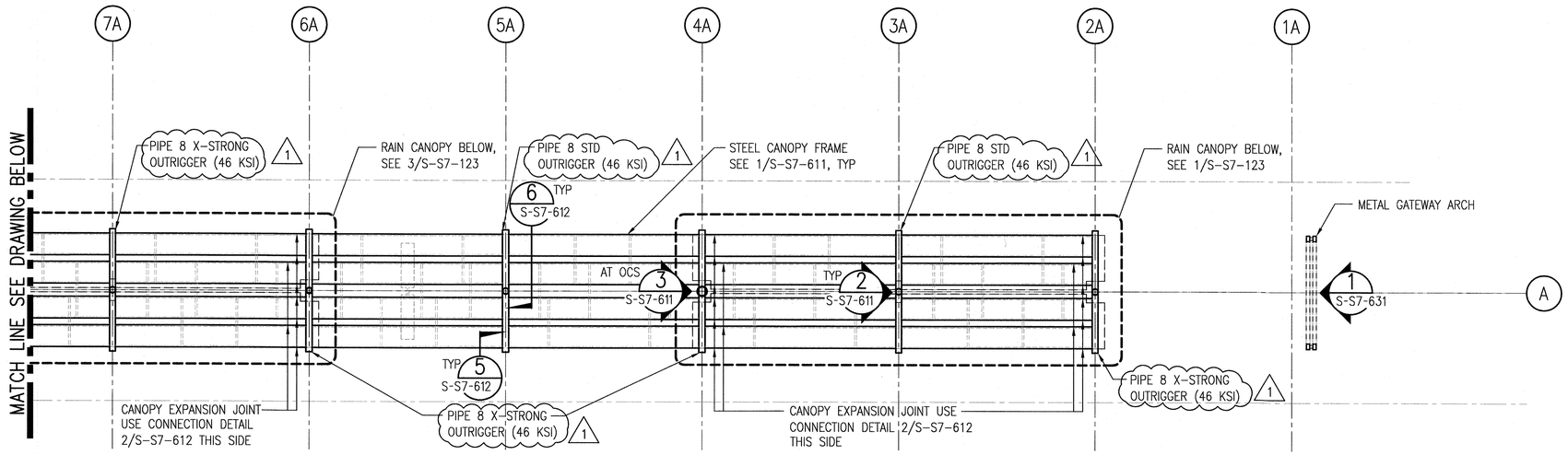

CANOPY FRAMING PLAN 1 S-S7-121

1/8"-1'-0"

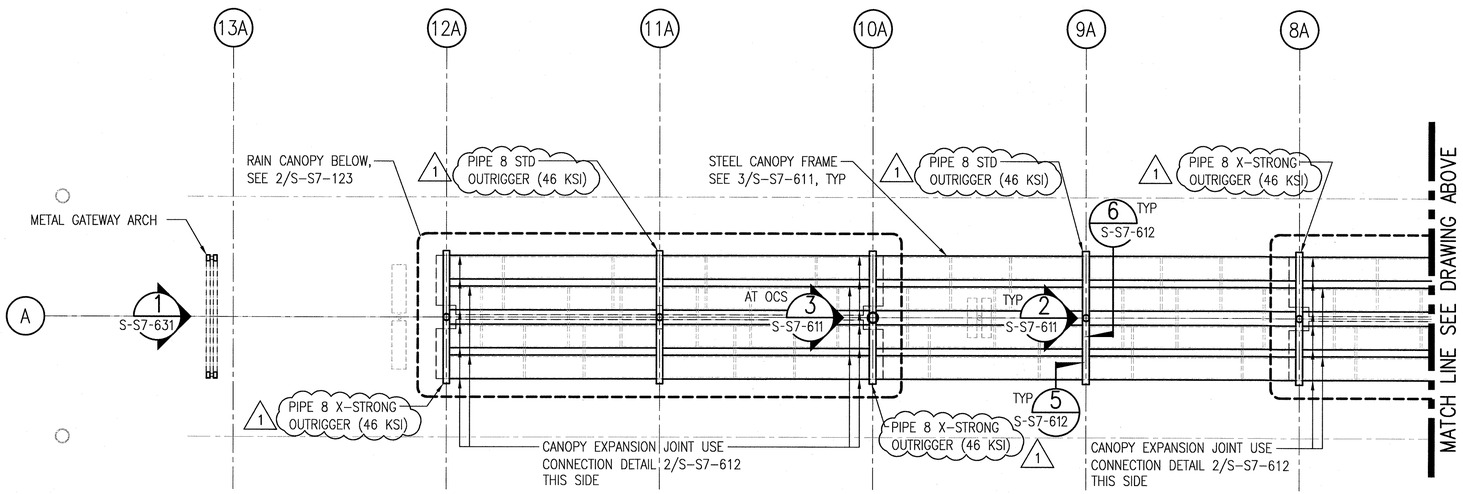

SRJV
JAN 24 2014
ISSUED FOR CONSTRUCTION

Exposition Construction Authority
Approved for Construction
Drawings - AFC
JAN 23 2014

CANOPY FRAMING PLAN (CONT) 2 S-S7-121

1/8"-1'-0"

THE PREPARATION OF THIS DRAWING HAS BEEN FINANCED BY THE TAXES OF THE CITIZENS OF LOS ANGELES COUNTY AND OF THE STATE OF CALIFORNIA.

REV	DATE	BY	APP	REG NO	EXPIRES	SEAL HOLDER	DESCRIPTION
1	7/30/13	FL	KW	2870	9/30/13	KEN WONG	ECI 17
0	5/30/13	FL	KW	2870	9/30/13	KEN WONG	APPROVED FOR CONSTRUCTION

DESIGNED BY D. YOON
DRAWN BY E. RAMIREZ
CHECKED BY D. KATHURIA
IN CHARGE K.WONG
DATE 5/30/13

REGISTERED PROFESSIONAL ENGINEER KENNETH N. WONG No. 2870 Exp 09/30/13 STRUCTURAL STATE OF CALIFORNIA

Exposition Metro Line Construction Authority
Expo

EXPO SKANSKA RADOS

444 South Flower Street
Suite 2200
Los Angeles, CA 90071
TEL (213) 443-7463
FAX (213) 362-9481

PARSONS BRINCKERHOFF

miyamoto. 700 South Flower Street, Suite 1010 Los Angeles, CA 90017 T: (213) 362-7778 miyamotointernational.com
MI0902064.03

CURRENT STATUS

EXPOSITION LRT PROJECT- PHASE 2
COLORADO/4TH STREET STATION
STRUCTURAL
CANOPY FRAMING PLAN
PLATFORM A

CONTRACT NO XP8902-002
DRAWING NO S-S7-121
REV 0
SCALE 1/8"-1'-0"
SHEET NO

I:\2009\MI0902064.03 Metro Expo Line Phase 2 Stage B\Drawings\1 Structural\07 Colorado_4th Street Station\expo2-S-S7-121.dw

18-Sep-13 3:26 PM Eric Ramos

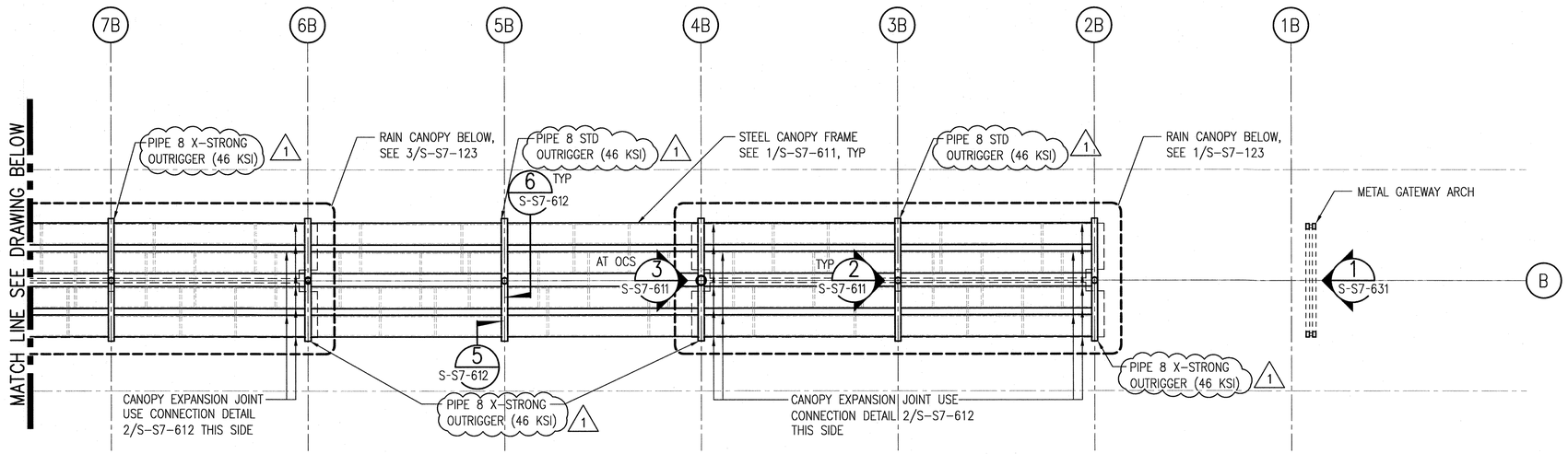

CANOPY FRAMING PLAN (1 / S-S7-122)

1/8"=1'-0"

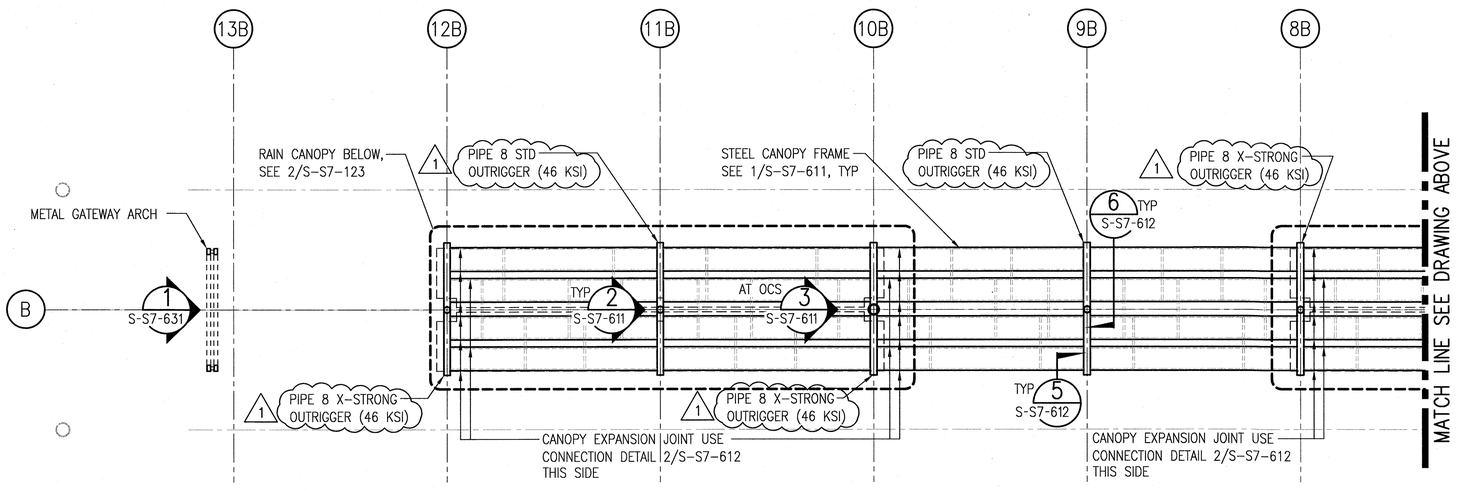

SRJV
JAN 24 2014
ISSUED FOR CONSTRUCTION

Exposition Construction Authority
Approved for Construction
Drawings - AFC
JAN 23 2014

CANOPY FRAMING PLAN (CONT) (2 / S-S7-122)

1/8"=1'-0"

THE PREPARATION OF THIS DRAWING HAS BEEN FINANCED BY THE TAXES OF THE CITIZENS OF LOS ANGELES COUNTY AND OF THE STATE OF CALIFORNIA.

REV	DATE	BY	APP	REG NO	EXPIRES	SEAL HOLDER	DESCRIPTION
1	7/30/13	FL	KW	2870	9/30/13	KEN WONG	ECI 17
0	5/30/13	FL	KW	2870	9/30/13	KEN WONG	APPROVED FOR CONSTRUCTION

DESIGNED BY D. YOON
DRAWN BY E. RAMIREZ
CHECKED BY D. KATHURIA
IN CHARGE K.WONG
DATE 5/30/13

REGISTERED PROFESSIONAL ENGINEER KENNETH N. WONG No. 2870 Exp 09/30/13 STRUCTURAL STATE OF CALIFORNIA

Exposition Metro Line Construction Authority
Expo

EXPO SKANSKA RADOS
444 South Flower Street
Suite 2200
Los Angeles, CA 90071
TEL (213) 443-7463
FAX (213) 362-9481

PARSONS BRINCKERHOFF
miyamoto. 700 South Flower Street, Suite 1010 Los Angeles, CA 90017 T: (213) 362-7778 miyamotointernational.com
MI0902064.03

CURRENT STATUS

EXPOSITION LRT PROJECT- PHASE 2
COLORADO/4TH STREET STATION
STRUCTURAL
CANOPY FRAMING PLAN
PLATFORM B

CONTRACT NO XP8902-002
DRAWING NO S-S7-122
REV 0
SCALE 1/8"=1'-0"
SHEET NO

I:\20009\MI0902064.03 Metro Expo Line Phase 2 Stage B\Drawings\1 Structural\07 Colorado_4th Street Station\expo2-S-S7-122.dw
18-Sep-13 3:26 PM Eric Ramos

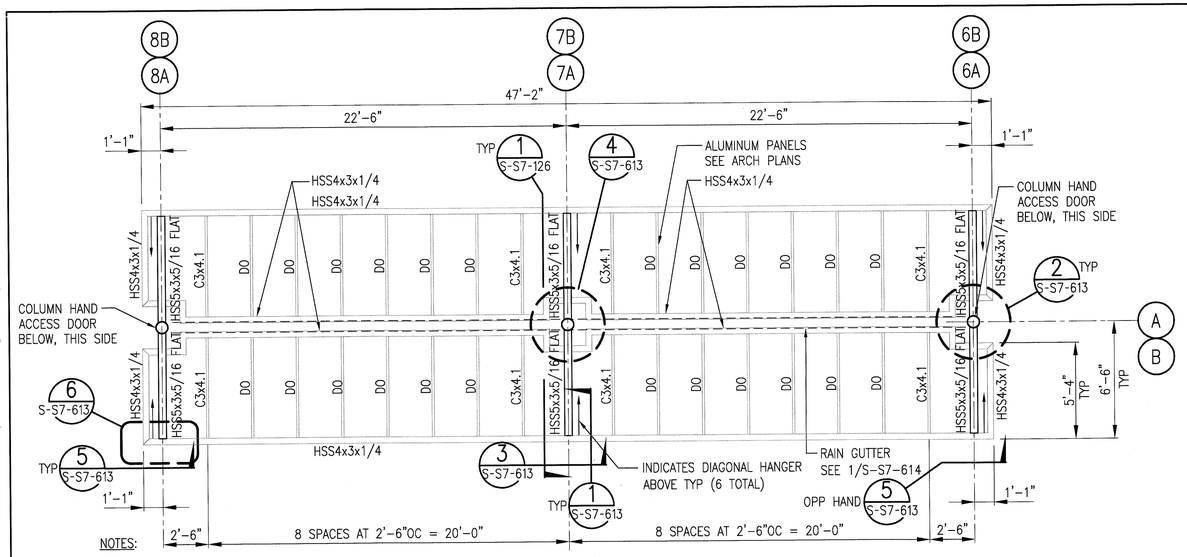

NOTES:

1. SEE ARCHITECTURAL PLANS FOR DIMENSIONS AND INFORMATION NOT SHOWN.
2. ALL BEARING EDGES OF ALUMINUM SHEETS SHALL BE ATTACHED TO STEEL FRAMING MEMBERS, SEE ARCH FOR SHEET LAYOUT.
3. SPACE BEAMS EQUALLY UNLESS DIMENSIONED OTHERWISE.

RAIN CANOPY PLAN

1/4"=1'-0"

3 / S-S7-123

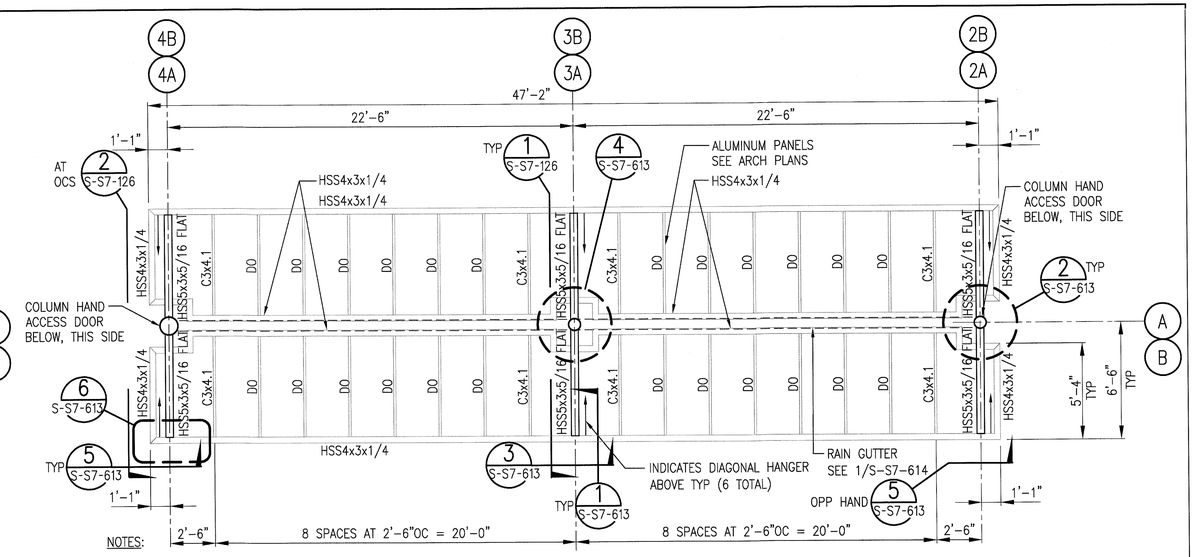

NOTES:

1. SEE ARCHITECTURAL PLANS FOR DIMENSIONS AND INFORMATION NOT SHOWN.
2. ALL BEARING EDGES OF ALUMINUM SHEETS SHALL BE ATTACHED TO STEEL FRAMING MEMBERS, SEE ARCH FOR SHEET LAYOUT.
3. SPACE BEAMS EQUALLY UNLESS DIMENSIONED OTHERWISE.

RAIN CANOPY PLAN

1/4"=1'-0"

1 / S-S7-123

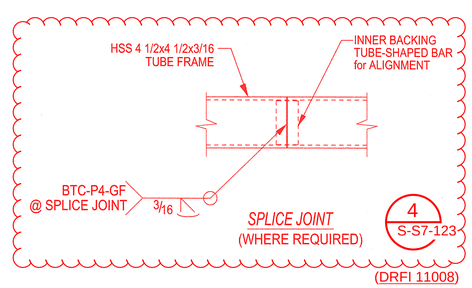

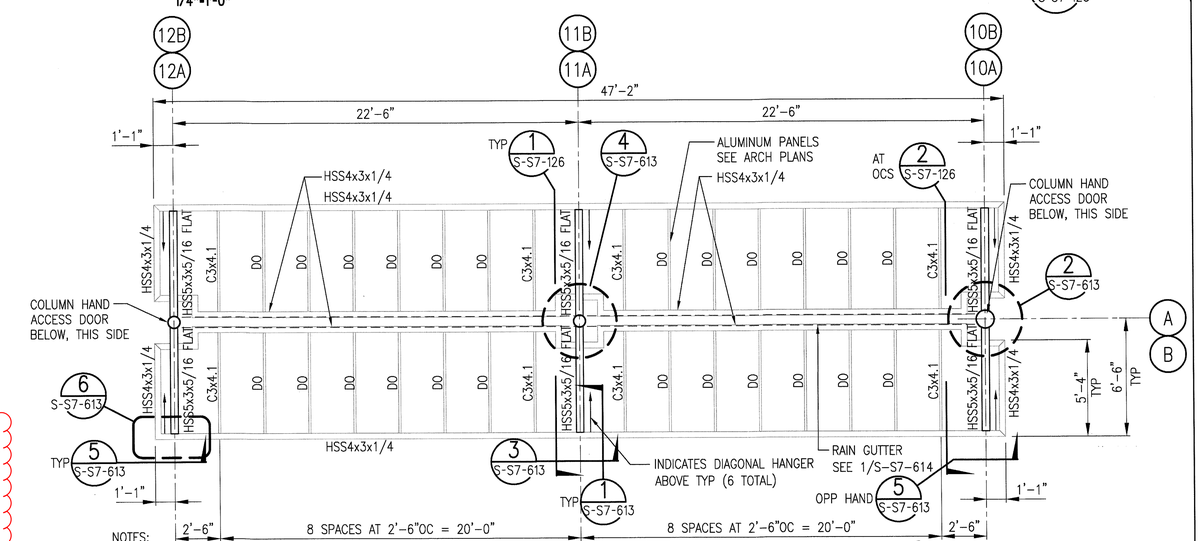

NOTES:

1. SEE ARCHITECTURAL PLANS FOR DIMENSIONS AND INFORMATION NOT SHOWN.
2. ALL BEARING EDGES OF ALUMINUM SHEETS SHALL BE ATTACHED TO STEEL FRAMING MEMBERS, SEE ARCH FOR SHEET LAYOUT.
3. SPACE BEAMS EQUALLY UNLESS DIMENSIONED OTHERWISE.

RAIN CANOPY PLAN

1/4"=1'-0"

2 / S-S6-123

SRJV
JUN 24 2013
ISSUED FOR CONSTRUCTION

THE PREPARATION OF THIS DRAWING HAS BEEN FINANCED BY THE TAXES OF THE CITIZENS OF LOS ANGELES COUNTY AND OF THE STATE OF CALIFORNIA.

REV	DATE	BY	APP	REG NO	EXPIRES	SEAL HOLDER	DESCRIPTION
0	5/30/13	FL	KW	2870	9/30/13	KEN WONG	APPROVED FOR CONSTRUCTION

DESIGNED BY D. YOON
DRAWN BY E. RAMIREZ
CHECKED BY D. KATHURIA
IN CHARGE K.WONG
DATE 5/30/13

REGISTERED PROFESSIONAL ENGINEER KENNETH N. WONG No. 2870 Exp 09/30/13 STRUCTURAL STATE OF CALIFORNIA

Exposition Metro Line Construction Authority
Expo
Exposition Construction Authority Approved for Construction Drawings - AFC
JUN 21 2013

EXPO SKANSKA RADOS
444 South Flower Street
Suite 2200
Los Angeles, CA 90071
TEL (213) 443-7463
FAX (213) 362-9481

PARSONS BRINCKERHOFF
miyamoto 700 South Flower Street, Suite 1010 T: (213) 362-7778 www.miyamotointernational.com
MI0902064.03

CURRENT STATUS

EXPOSITION LRT PROJECT- PHASE 2
COLORADO/4TH STREET STATION
STRUCTURAL
RAIN CANOPY PLAN AND SECTIONS

CONTRACT NO XP8902-002
DRAWING NO S-S7-123
REV 0
SCALE 1/4"=1'-0"
SHEET NO

I:\2009\MI0902064.03 Metro Expo Line Phase 2 Stage B\Drawings\1 Structural\07 Colorado, 4th Street Station\exp02-S-S7-123.dwg
30-May-13 2:37 PM Edgar Ramirez

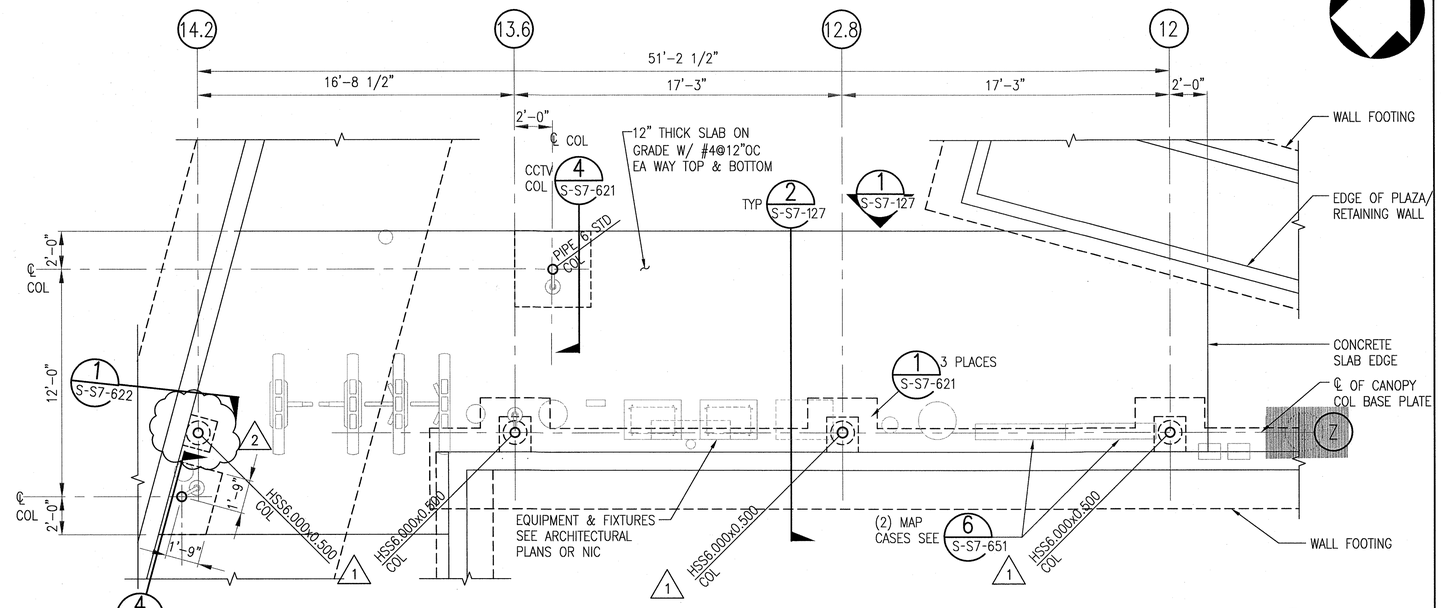

TICKETING AREA #1 FOUNDATION PLAN

1/4"=1'-0"

1 S-S7-124

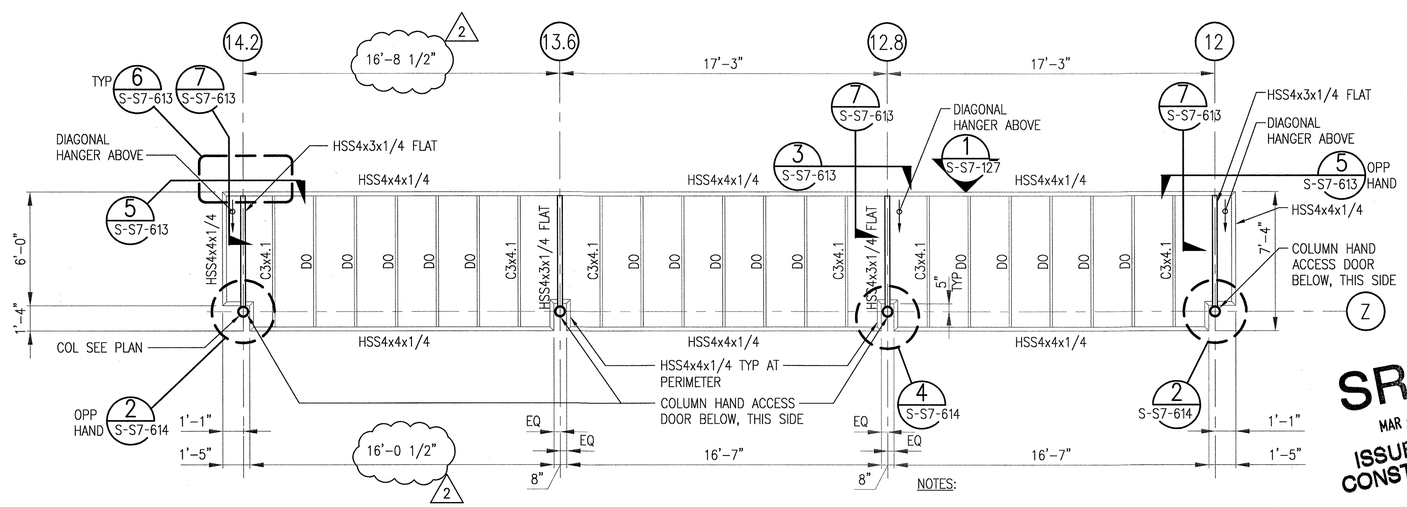

NOTES:

1. SEE ARCHITECTURAL PLANS FOR DIMENSIONS AND INFORMATION NOT SHOWN.
2. ALL BEARING EDGES OF ALUMINUM SHEETS SHALL BE ATTACHED TO STEEL FRAMING MEMBERS. SEE ARCH FOR SHEET LAYOUT.
3. SPACE BEAMS EQUALLY UNLESS DIMENSIONED OTHERWISE.

TICKETING AREA #1 CANOPY PLAN

1/4"=1'-0"

2 S-S7-124

SRJV
MAR 03 2014
ISSUED FOR CONSTRUCTION

THE PREPARATION OF THIS DRAWING HAS BEEN FINANCED BY THE TAXES OF THE CITIZENS OF LOS ANGELES COUNTY AND OF THE STATE OF CALIFORNIA.

REV	DATE	BY	APP	REG NO	EXPIRES	SEAL HOLDER	DESCRIPTION
2	1/8/14	FL	KW	2870	9/30/13	KEN WONG	ECI 79
1	7/30/13	FL	KW	2870	9/30/13	KEN WONG	ECI 17
0	5/30/13	FL	KW	2870	9/30/13	KEN WONG	APPROVED FOR CONSTRUCTION

DESIGNED BY D. YOON
DRAWN BY E. RAMIREZ
CHECKED BY D. KATHURIA
IN CHARGE K.WONG
DATE 5/30/13

REGISTERED PROFESSIONAL ENGINEER KENNETH N. WONG No. 2870 Exp 09/30/13 STRUCTURAL STATE OF CALIFORNIA

Exposition Metro Line Construction Authority
Expo
Exposition Construction Authority Approved for Construction Drawings - AFC
FEB 28 2014

EXPO SKANSKA RADOS
444 South Flower Street
Suite 2200
Los Angeles, CA 90071
TEL (213) 443-7463
FAX (213) 362-9481

PARSONS BRINCKERHOFF
miyamoto. 700 South Flower Street, Suite 1010 Los Angeles, CA 90017 T: (213) 362-7778 miyamotointernational.com
M10902064.05
CURRENT STATUS

EXPOSITION LRT PROJECT- PHASE 2
COLORADO/4TH STREET STATION
STRUCTURAL
TICKETING PLAN AND ELEVATIONS

CONTRACT NO XP8902-002
DRAWING NO S-S7-124
REV 2
SCALE 1/4"=1'-0"
SHEET NO

I:\20091M109020064.05 Metro Expo Line Phase 2 Stage B -4th\Colorado Sth Add Canopies\Drawings\expo2-S-S7-124.dwg
7-Jan-14 1:20 PM Edgar Ramirez

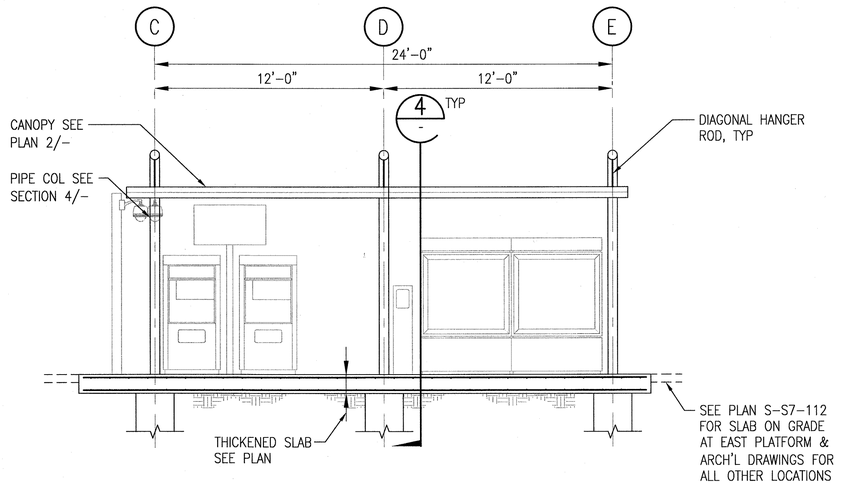

TICKETING AREA #2 ELEVATION

1/4"=1'-0"

3 / S-S7-125

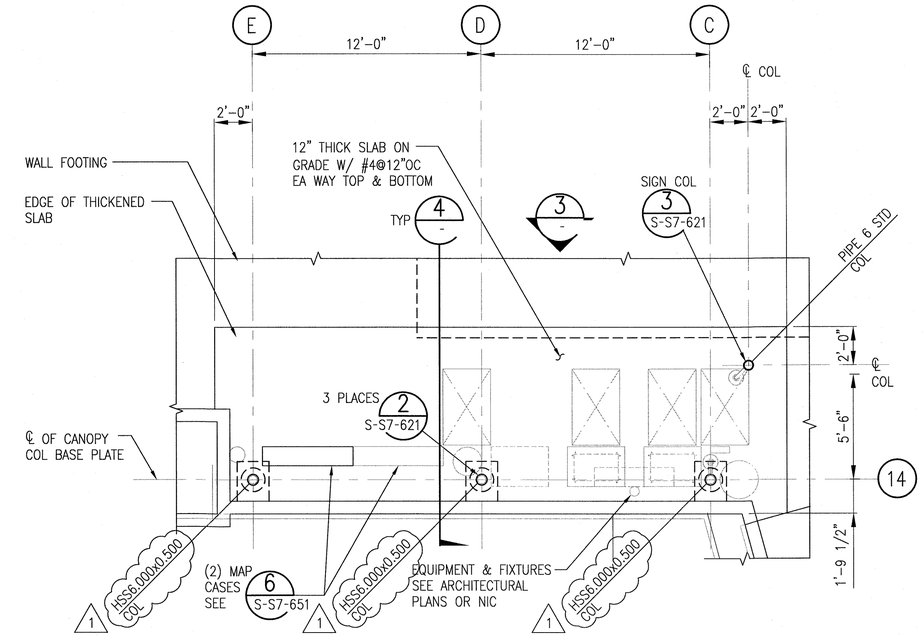

TICKETING AREA #2 FOUNDATION PLAN

1/4"=1'-0"

1 / S-S7-125

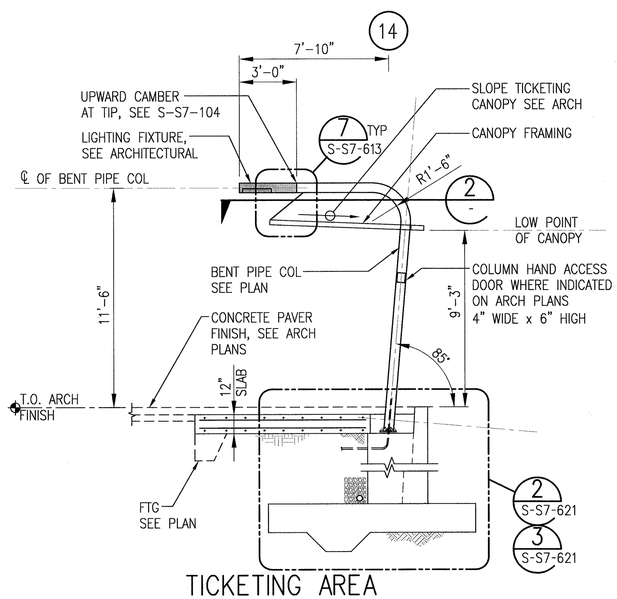

TICKETING AREA SECTION

1/4"=1'-0"

4 / S-S7-124

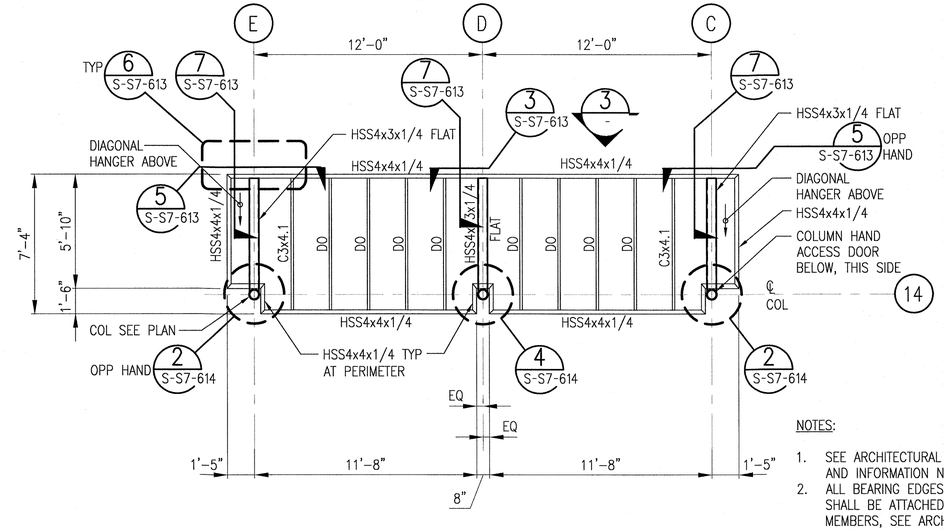

NOTES:

1. SEE ARCHITECTURAL PLANS FOR DIMENSIONS AND INFORMATION NOT SHOWN.
2. ALL BEARING EDGES OF ALUMINUM SHEETS SHALL BE ATTACHED TO STEEL FRAMING MEMBERS, SEE ARCH FOR SHEET LAYOUT.
3. SPACE BEAMS EQUALLY UNLESS DIMENSIONED OTHERWISE.

TICKETING AREA #2 CANOPY PLAN

1/4"=1'-0"

2 / S-S7-125

SRJV
JAN 24 2014
ISSUED FOR CONSTRUCTION

Exposition Construction Authority
Approved for Construction
Drawings - AFC
JAN 23 2014

THE PREPARATION OF THIS DRAWING HAS BEEN FINANCED BY THE TAXES OF THE CITIZENS OF LOS ANGELES COUNTY AND OF THE STATE OF CALIFORNIA.

REV	DATE	BY	APP	REG NO	EXPIRES	SEAL HOLDER	DESCRIPTION
1	7/30/13	FL	KW	2870	9/30/13	KEN WONG	ECI 17
0	5/30/13	FL	KW	2870	9/30/13	KEN WONG	APPROVED FOR CONSTRUCTION

DESIGNED BY D. YOON
DRAWN BY E. RAMIREZ
CHECKED BY D. KATHURIA
IN CHARGE K.WONG
DATE 5/30/13

REGISTERED PROFESSIONAL ENGINEER KENNETH N. WONG No. 2870 Exp 09/30/13 STRUCTURAL STATE OF CALIFORNIA

Exposition Metro Line Construction Authority
Expo

EXPO SKANSKA RADOS

444 South Flower Street
Suite 2200
Los Angeles, CA 90071
TEL (213) 443-7463
FAX (213) 362-9481

PARSONS BRINCKERHOFF

miyamoto. 700 South Flower Street, Suite 1010 Los Angeles, CA 90017 T: (213) 362-7778 miyamotointernational.com
Mi0902064.03

CURRENT STATUS

EXPOSITION LRT PROJECT- PHASE 2
COLORADO/4TH STREET STATION
STRUCTURAL
TICKETING PLAN AND ELEVATIONS

CONTRACT NO XP8902-002
DRAWING NO S-S7-125
REV 0
SCALE 1/4"=1'-0"
SHEET NO

I:\20\09\Mi\0902064.03 Metro Expo Line Phase 2 Stage B\Drawings\1 Structural\07 Colorado_4th Street Station\exp2-S-S7-125.dwg
18-Sep-13 3:27 PM Eric Ramos

132009\MI092064.03 Metro Expo Line Phase 2 Stage 8\Drawings\1 Structural\07 Colorado 4th Street Station\exp02-S-S7-126.dw
30-May-13 2:38 PM Edgar Ramirez

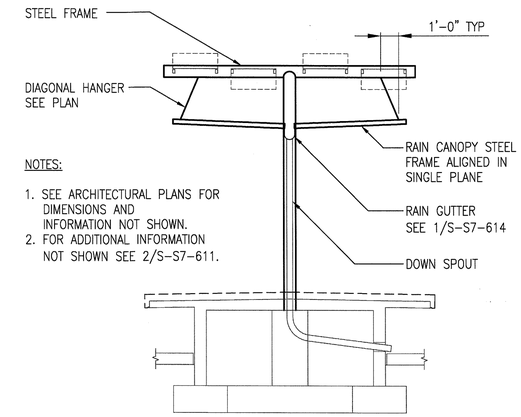

NOTES:

1. SEE ARCHITECTURAL PLANS FOR DIMENSIONS AND INFORMATION NOT SHOWN.
2. FOR ADDITIONAL INFORMATION NOT SHOWN SEE 2/S-S7-611.

RAIN PROTECTION SECTION 1

1/4"=1'-0" S-S7-126

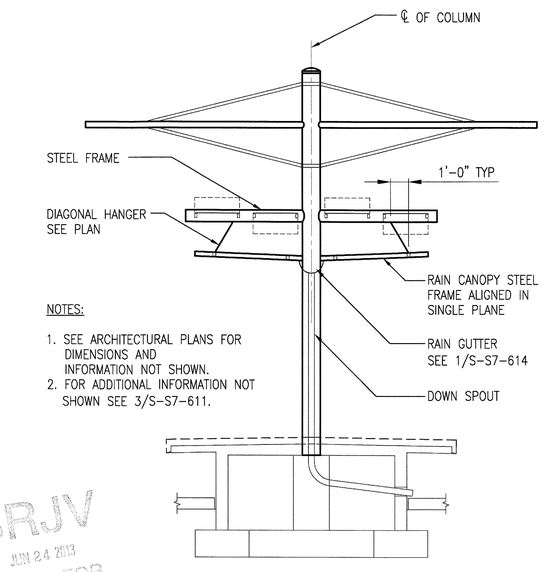

NOTES:

1. SEE ARCHITECTURAL PLANS FOR DIMENSIONS AND INFORMATION NOT SHOWN.
2. FOR ADDITIONAL INFORMATION NOT SHOWN SEE 3/S-S7-611.

SRJV
JUN 24 2013
ISSUED FOR CONSTRUCTION

RAIN PROTECTION 2

1/4"=1'-0" S-S7-126

THE PREPARATION OF THIS DRAWING HAS BEEN FINANCED BY THE TAXES OF THE CITIZENS OF LOS ANGELES COUNTY AND OF THE STATE OF CALIFORNIA.

REV	DATE	BY	APP	REG NO	EXPIRES	SEAL HOLDER	DESCRIPTION
0	5/30/13	FL	KW	2870	9/30/13	KEN WONG	APPROVED FOR CONSTRUCTION

DESIGNED BY D. YOON
DRAWN BY E. RAMIREZ
CHECKED BY D. KATHURIA
IN CHARGE K.WONG
DATE 5/30/13

REGISTERED PROFESSIONAL ENGINEER KENNETH N. WONG No. 2870 Exp 09/30/13 STRUCTURAL STATE OF CALIFORNIA

Exposition Metro Line Construction Authority
Expo
Exposition Construction Authority Approved for Construction Drawings - AFC JUN 21 2013

EXPO SKANSKA RADOS
444 South Flower Street
Suite 2200
Los Angeles, CA 90071
TEL (213) 443-7463
FAX (213) 362-9481

PARSONS BRINCKERHOFF
miyamoto 700 South Flower Street, Suite 1010 T: (213) 362-7778 www.miyamotointernational.com
MI092064.03

EXPOSITION LRT PROJECT- PHASE 2
COLORADO/4TH STREET STATION
STRUCTURAL
RAIN PROTECTED SEGMENT
SECTIONS

CONTRACT NO XP8902-002
DRAWING NO S-S7-126 REV 0
SCALE AS NOTED
SHEET NO

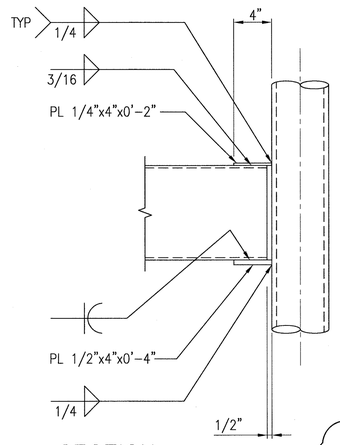

SECTION
1 1/2"=1'-0"
5 S-S7-127

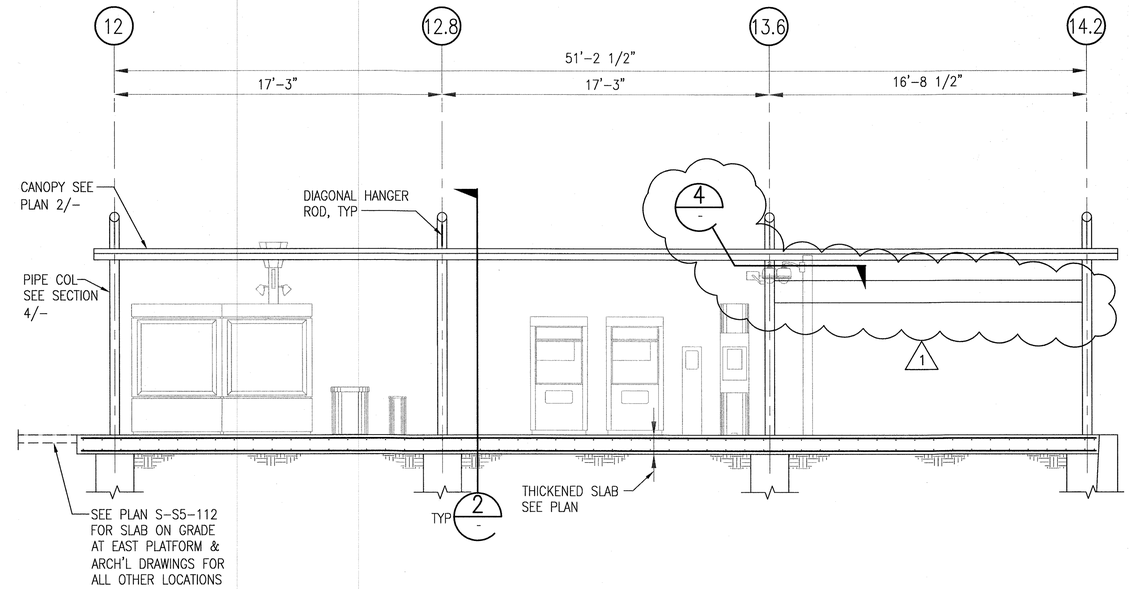

TICKETING AREA #1 ELEVATION
1/4"=1'-0"
1 S-S7-127

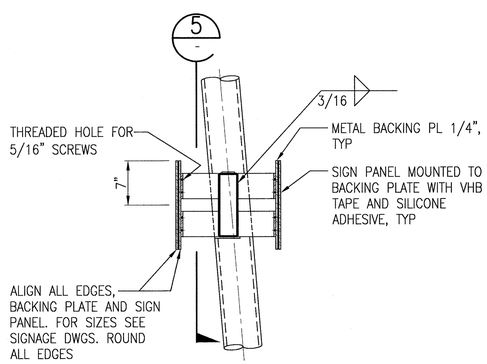

SECTION
1"=1'-0"
6 S-S7-127

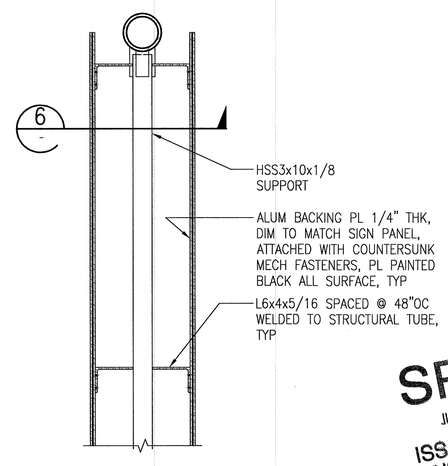

PLAN
1"=1'-0"
4 S-S7-127

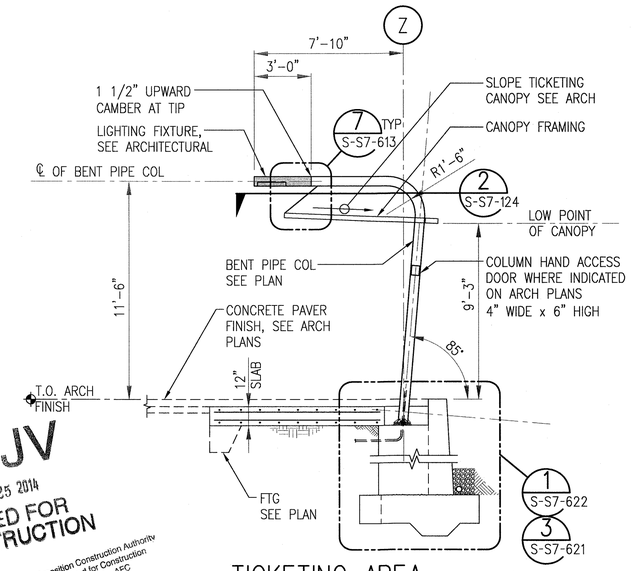

TICKETING AREA SECTION
1/4"=1'-0"
2 S-S7-127

SRJV
JUL 25 2014
ISSUED FOR CONSTRUCTION
Exposition Construction Authority Approved for Construction Drawings - ARC
JUL 24 2014

THE PREPARATION OF THIS DRAWING HAS BEEN FINANCED BY THE TAXES OF THE CITIZENS OF LOS ANGELES COUNTY AND OF THE STATE OF CALIFORNIA.

REV	DATE	BY	APP	REG NO	EXPIRES	SEAL HOLDER	DESCRIPTION
1	4/30/14	FL	KW	2870	9/30/15	KEN WONG	ECI 99
0	1/8/14	FL	KW	2870	9/30/15	KEN WONG	ECI 79

DESIGNED BY D. YOON
DRAWN BY E. RAMIREZ
CHECKED BY D. KATHURIA
IN CHARGE K.WONG
DATE 1/8/14

REGISTERED PROFESSIONAL ENGINEER KENNETH N. WONG No. 2870 Exp. 09/30/15 STRUCTURAL STATE OF CALIFORNIA

Exposition Metro Line Construction Authority
Expo

EXPO SKANSKA RADOS

444 South Flower Street
Suite 2200
Los Angeles, CA 90071
TEL (213) 443-7463
FAX (213) 362-9481

PARSONS BRINCKERHOFF

miyamoto. 700 South Flower Street, Suite 1010 Los Angeles, CA 90017 T: (213) 362-7778 miyamotointernational.com
MI0902064.05

CURRENT STATUS

EXPOSITION LRT PROJECT- PHASE 2
COLORADO/4TH STREET STATION
STRUCTURAL
TICKETING SECTION AND ELEVATION

CONTRACT NO XP8902-002
DRAWING NO S-S7-127
REV 1
SCALE 1/4"=1'-0"
SHEET NO

F:\2009\MI09\Z094\Ub Metro Expo Line Phase 2 Stage B 4th Colorado Stn Add Canopies\Drawings\expo2-s-s7-127.dwg
1-May-14 11:21 AM Glenda Tavera

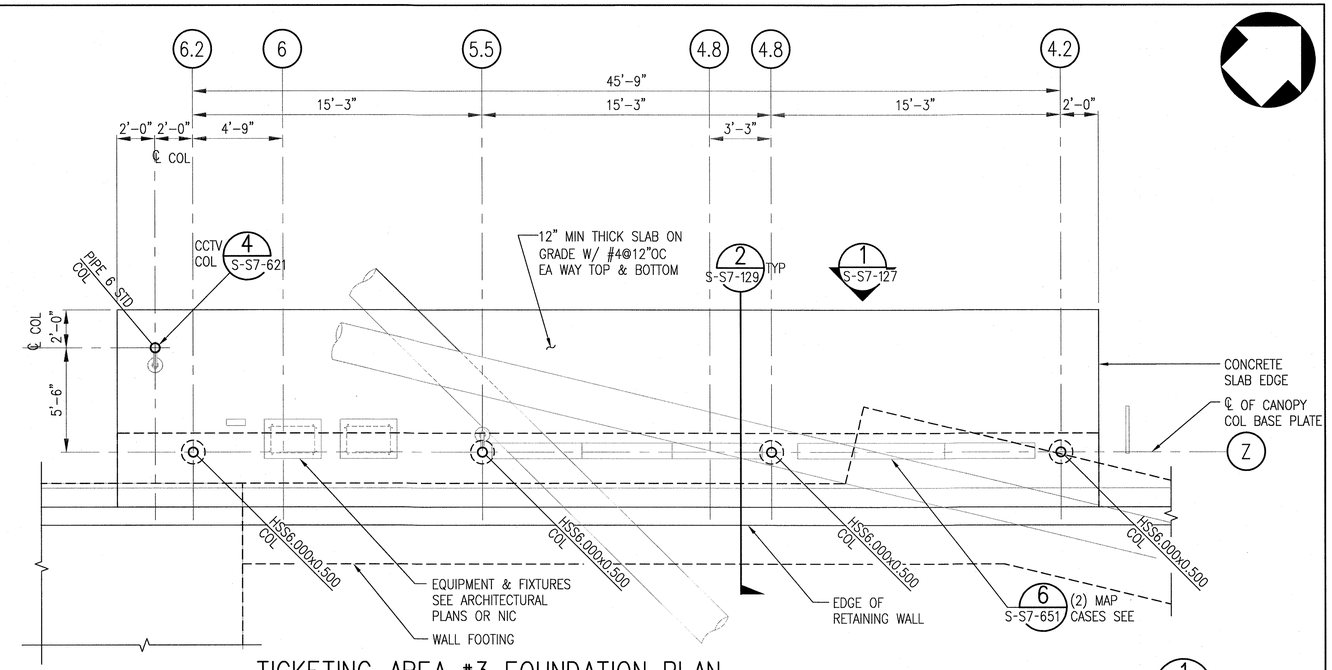

TICKETING AREA #3 FOUNDATION PLAN

1/4"=1'-0"

1 S-S7-128

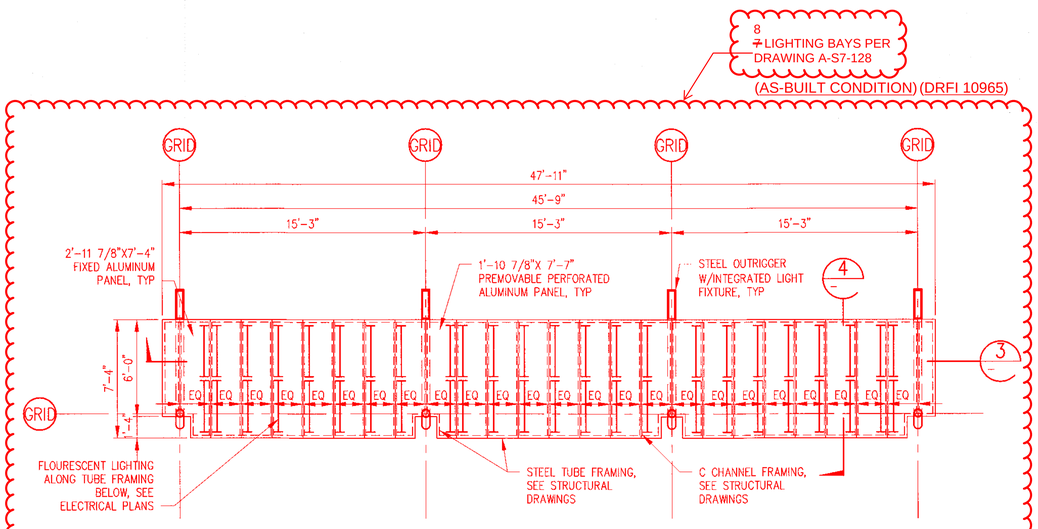

TICKETING AREA #3 RAIN CANOPY REFLECTED CEILING PLAN

1/4"=1'-0"

2 A-S7-128

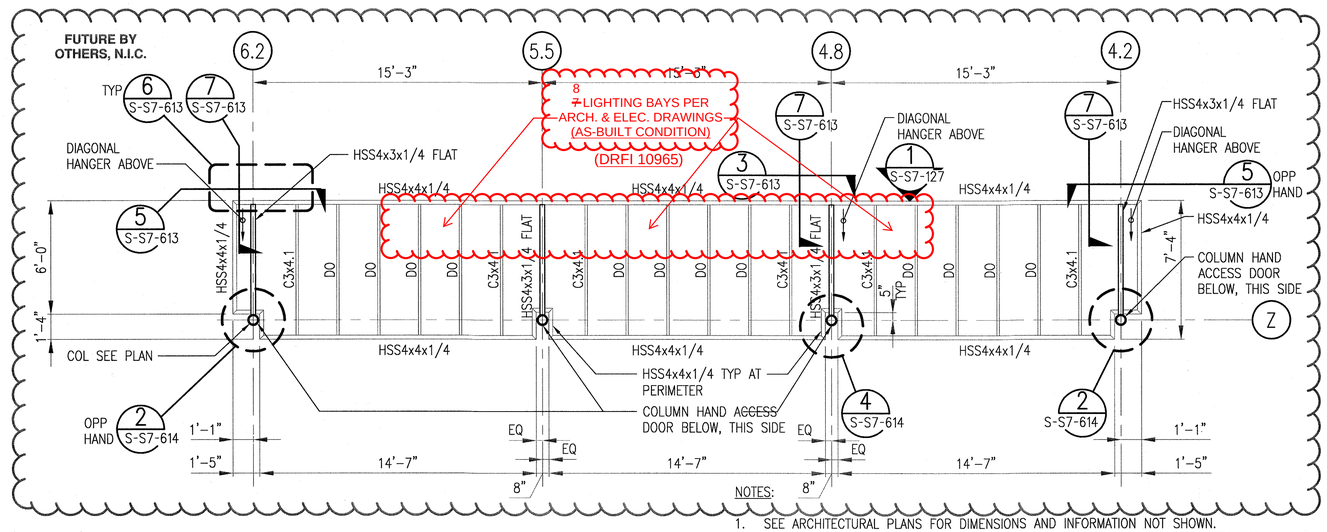

NOTES:

1. SEE ARCHITECTURAL PLANS FOR DIMENSIONS AND INFORMATION NOT SHOWN.
2. ALL BEARING EDGES OF ALUMINUM SHEETS SHALL BE ATTACHED TO STEEL FRAMING MEMBERS. SEE ARCH FOR SHEET LAYOUT.
3. SPACE BEAMS EQUALLY UNLESS DIMENSIONED OTHERWISE.

TICKETING AREA #3 CANOPY PLAN

1/4"=1'-0"

2 S-S7-128

SRJV

MAR 03 2014

ISSUED FOR CONSTRUCTION

THE PREPARATION OF THIS DRAWING HAS BEEN FINANCED BY THE TAXES OF THE CITIZENS OF LOS ANGELES COUNTY AND OF THE STATE OF CALIFORNIA.

REV	DATE	BY	APP	REG NO	EXPIRES	SEAL HOLDER	DESCRIPTION
0	1/8/14	FL	KW	2870	9/30/15	KEN WONG	ECI 79

DESIGNED BY D. YOON
DRAWN BY E. RAMIREZ
CHECKED BY D. KATHURIA
IN CHARGE K.WONG
DATE 1/8/14

REGISTERED PROFESSIONAL ENGINEER KENNETH N. WONG No. 2870 Exp. 09/30/15 STRUCTURAL STATE OF CALIFORNIA

Exposition Metro Line Construction Authority
Expo
Exposition Construction Authority Approved for Construction Drawings - AFC
FEB 28 2014

EXPO SKANSKA RADOS
444 South Flower Street
Suite 2200
Los Angeles, CA 90071
TEL (213) 443-7463
FAX (213) 362-9481

PARSONS BRINCKERHOFF
miyamoto. 700 South Flower Street, Suite 1010 Los Angeles, CA 90017 T: (213) 362-7778 miyamotointernational.com
MI0902064.05
CURRENT STATUS

EXPOSITION LRT PROJECT- PHASE 2
COLORADO/4TH STREET STATION
STRUCTURAL
TICKETING PLAN AND ELEVATIONS

CONTRACT NO XP8902-002
DRAWING NO S-S7-128
REV 0
SCALE 1/4"=1'-0"
SHEET NO

I:\2009\MI0902064.05 Metro Expo Line Phase 2 Stage B -4th/Colorado Stn Add Canopies\Drawings\expo2-S-S7-128.dwg
23-Jan-14 9:51 AM Eric Ramos

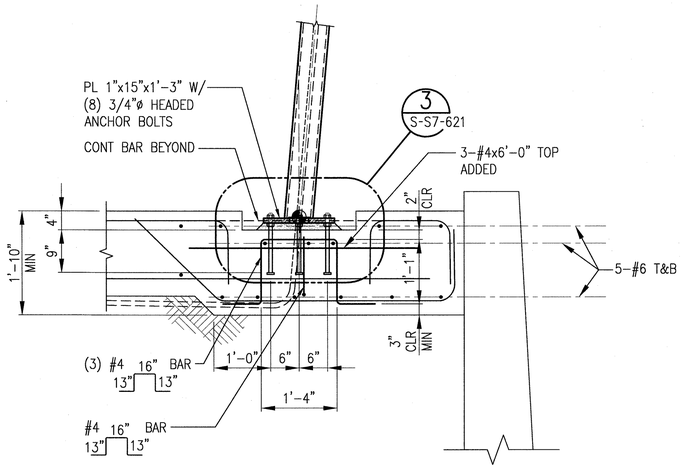

TICKETING AREA #3 COLUMN FOOTING

3/4"=1'-0"

3 S-S7-129

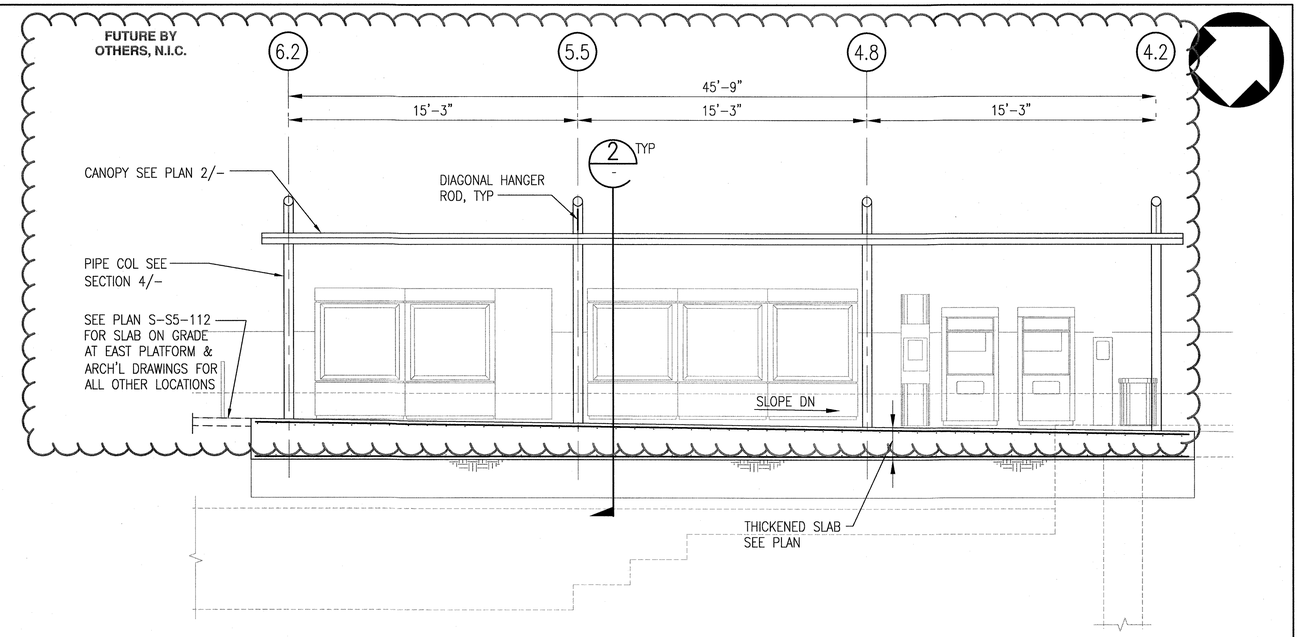

TICKETING AREA #3 ELEVATION

1/4"=1'-0"

1 S-S7-129

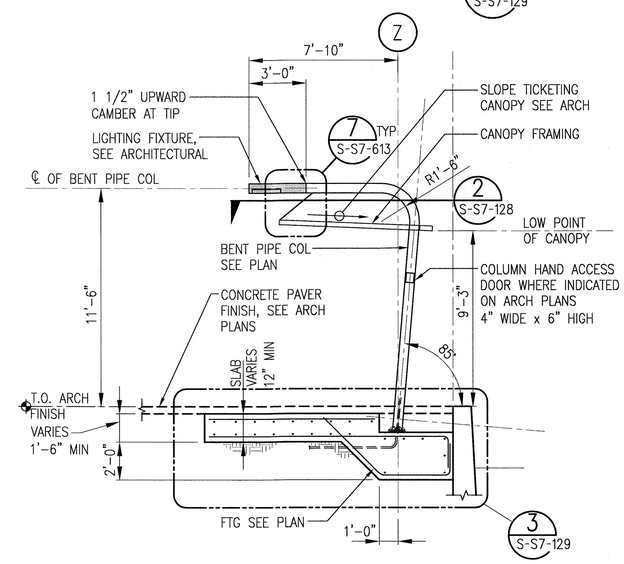

SRJV
MAR 03 2014
ISSUED FOR CONSTRUCTION

TICKETING AREA SECTION

1/4"=1'-0"

2 S-S7-129

THE PREPARATION OF THIS DRAWING HAS BEEN FINANCED BY THE TAXES OF THE CITIZENS OF LOS ANGELES COUNTY AND OF THE STATE OF CALIFORNIA.

REV	DATE	BY	APP	REG NO	EXPIRES	SEAL HOLDER	DESCRIPTION
0	1/8/14	FL	KW	2870	9/30/15	KEN WONG	ECI 79

DESIGNED BY D. YOON
DRAWN BY E. RAMIREZ
CHECKED BY D. KATHURIA
IN CHARGE K.WONG
DATE 1/8/14

REGISTERED PROFESSIONAL ENGINEER KENNETH N. WONG No. 2870 Exp. 09/30/15 STRUCTURAL STATE OF CALIFORNIA

Exposition Metro Line Construction Authority
Expo
Exposition Construction Authority
Approved for Construction
Drawings - AFC
FEB 28 2014

EXPO SKANSKA RADOS

444 South Flower Street
Suite 2200
Los Angeles, CA 90071
TEL (213) 443-7463
FAX (213) 362-9481

PARSONS BRINCKERHOFF

miyamoto
700 South Flower Street, Suite 1010 T: (213) 362-7778
Los Angeles, CA 90017 miyamotointernational.com
MI09020064.05

CURRENT STATUS

EXPOSITION LRT PROJECT- PHASE 2
COLORADO/4TH STREET STATION
STRUCTURAL
TICKETING SECTION AND ELEVATION

CONTRACT NO XP8902-002
DRAWING NO S-S7-129
REV 0
SCALE 1/4"=1'-0"
SHEET NO

I:\2009\MI09020064.05 Metro Expo Line Phase 2 Stage B -4th/Colorado Stn Add Canopies\Drawings\expo2-S-S7-129.dwg
23-Jan-14 9:51 AM Eric Ramos

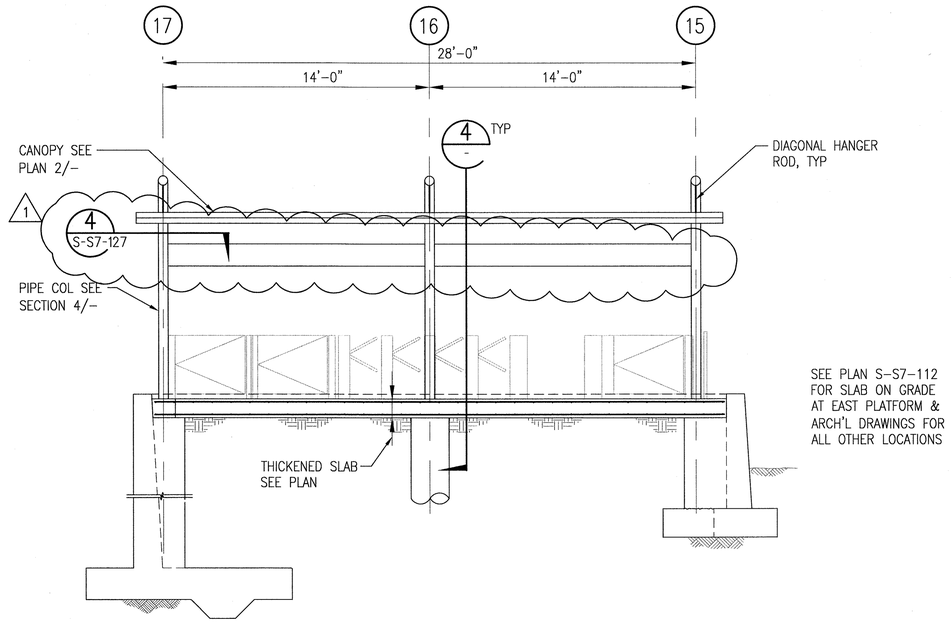

FARE BARRIER ELEVATION

1/4"=1'-0"

3 S-S7-130

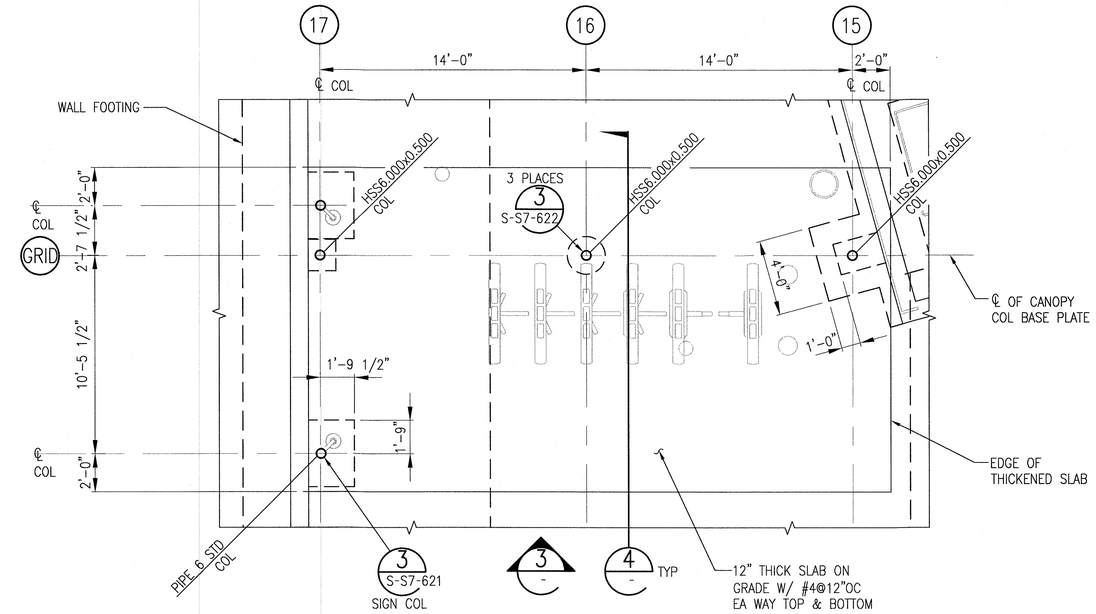

FARE BARRIER FOUNDATION PLAN

1/4"=1'-0"

1 S-S7-130

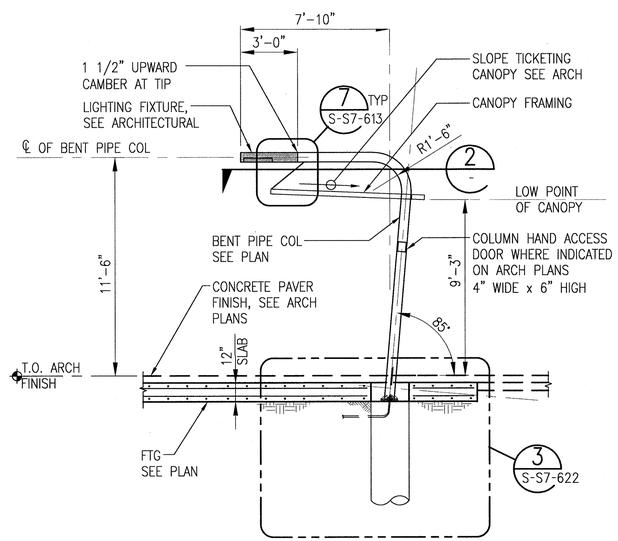

FARE BARRIER SECTION

1/4"=1'-0"

4 S-S7-130

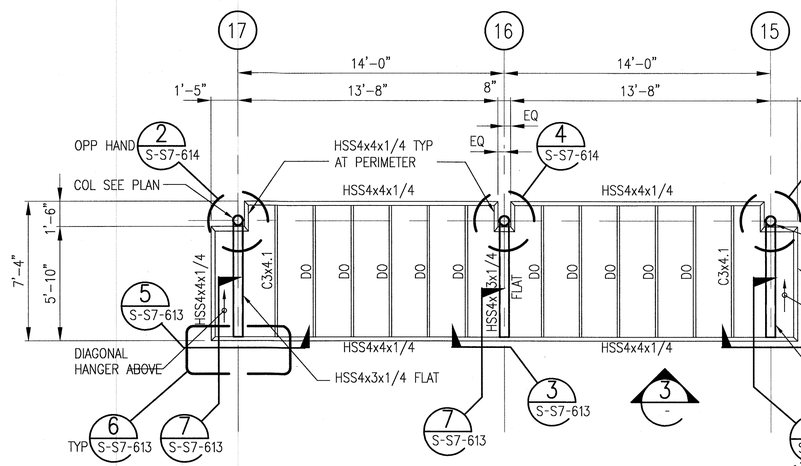

FARE BARRIER CANOPY PLAN

1/4"=1'-0"

2 S-S7-130

NOTES:

1. SEE ARCHITECTURAL PLANS FOR DIMENSIONS AND INFORMATION NOT SHOWN.
2. ALL BEARING EDGES OF ALUMINUM SHEETS SHALL BE ATTACHED TO STEEL FRAMING MEMBERS, SEE ARCH FOR SHEET LAYOUT.
3. SPACE BEAMS EQUALLY UNLESS DIMENSIONED OTHERWISE.

SRJV JUL 25 2014 ISSUED FOR CONSTRUCTION

Exposition Construction Authority Approved for Construction Drawings - AFC JUL 24 2014

THE PREPARATION OF THIS DRAWING HAS BEEN FINANCED BY THE TAXES OF THE CITIZENS OF LOS ANGELES COUNTY AND OF THE STATE OF CALIFORNIA.

REV	DATE	BY	APP	REG NO	EXPIRES	SEAL HOLDER	DESCRIPTION
1	4/30/14	FL	KW	2870	9/30/15	KEN WONG	ECI 99
0	1/8/14	FL	KW	2870	9/30/15	KEN WONG	ECI 79

DESIGNED BY D. YOON
DRAWN BY E. RAMIREZ
CHECKED BY D. KATHURIA
IN CHARGE K.WONG
DATE 1/8/14

REGISTERED PROFESSIONAL ENGINEER KENNETH N. WONG No. 2870 Exp. 09/30/15 STRUCTURAL STATE OF CALIFORNIA

Exposition Metro Line Construction Authority
Expo

EXPO SKANSKA RADOS

444 South Flower Street
Suite 2200
Los Angeles, CA 90071
TEL (213) 443-7463
FAX (213) 362-9481

PARSONS BRINCKERHOFF

miyamoto. 700 South Flower Street, Suite 1010 Los Angeles, CA 90017 T: (213) 362-7778 miyamotointernational.com
MI0902064.05

CURRENT STATUS

EXPOSITION LRT PROJECT- PHASE 2
COLORADO/4TH STREET STATION
STRUCTURAL
FARE BARRIER PLAN AND ELEVATIONS

CONTRACT NO XP8902-002
DRAWING NO S-S7-130
REV 1
SCALE 1/4"=1'-0"
SHEET NO

I:\ZAVJHMMNAZ64-Ub Metro Expo Line Phase 2 Stage B 4th\Colorado Stn Add Canopies\Drawings\exco2-S-S7-130.dwg
Glenda Tavera 1-May-14 10:21 AM

I:\2009\MI09202064.05 Metro Expo Line Phase 2 Stage B 4thColoradoStn Add Canopies\Drawings\expo2-S-S7-131.dwg

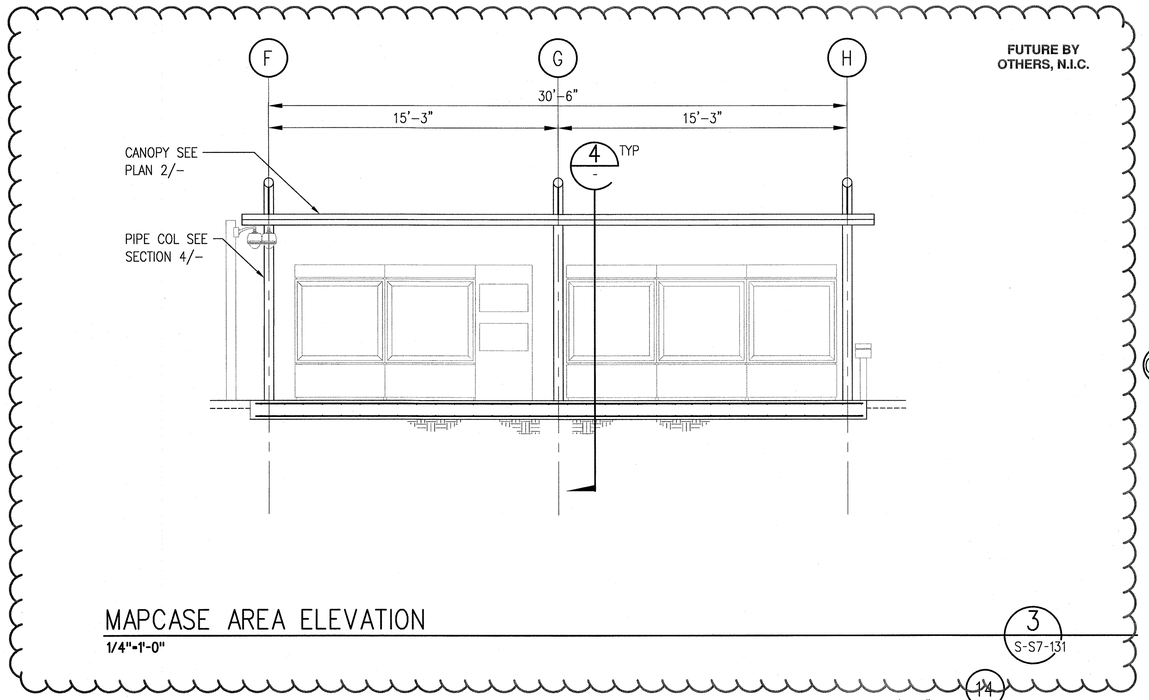

MAPCASE AREA ELEVATION 3 S-S7-131
1/4"=1'-0"

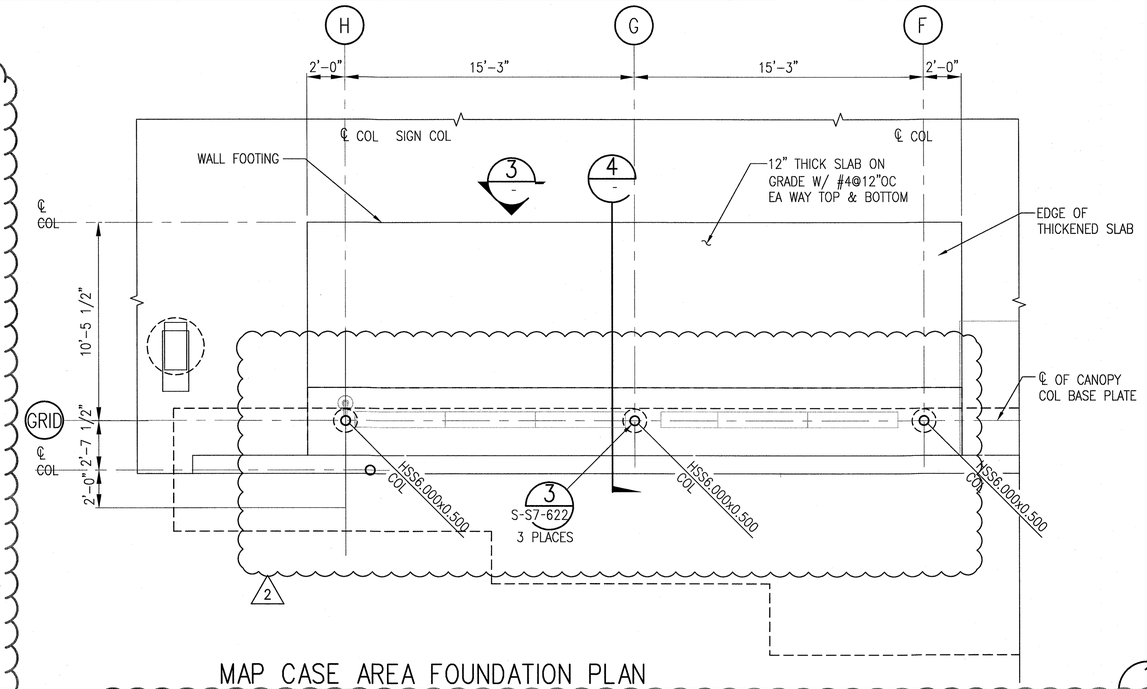

MAP CASE AREA FOUNDATION PLAN 1 S-S7-131
1/4"=1'-0"

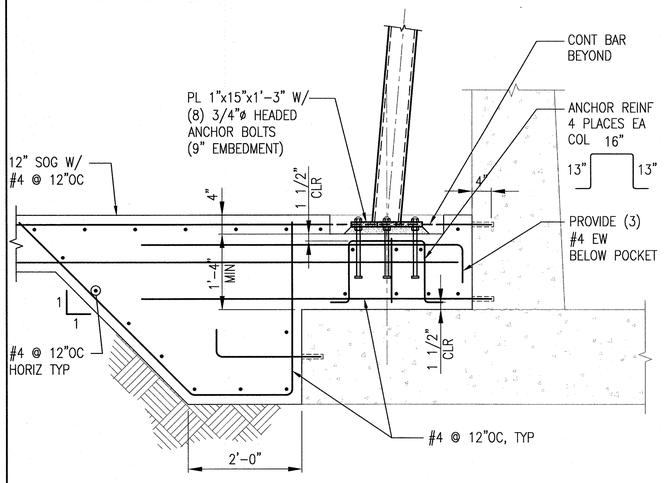

MAP CASE COLUMN FOOTING 5 S-S7-131 2
1/4"=1'-0"

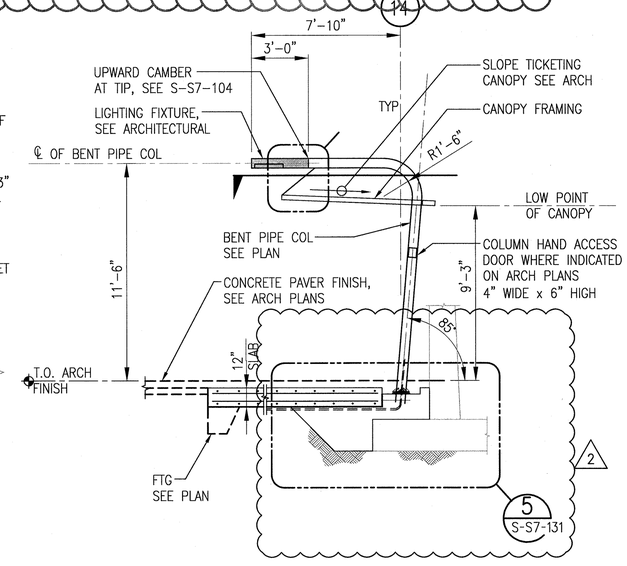

MAP CASE SECTION 4 S-S7-131
1/4"=1'-0"

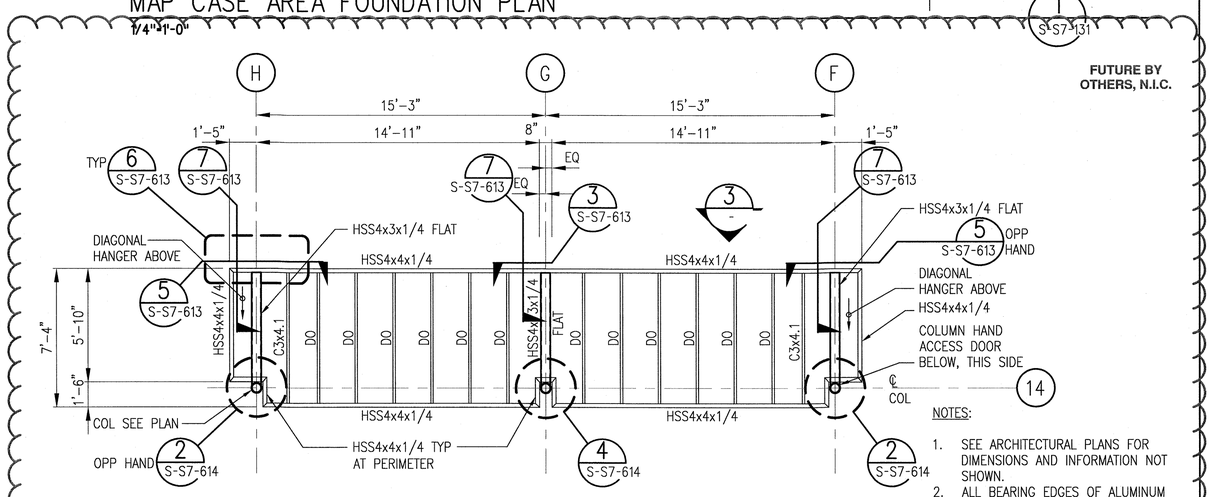

NOTES:

1. SEE ARCHITECTURAL PLANS FOR DIMENSIONS AND INFORMATION NOT SHOWN.
2. ALL BEARING EDGES OF ALUMINUM SHEETS SHALL BE ATTACHED TO STEEL FRAMING MEMBERS, SEE ARCH FOR SHEET LAYOUT.
3. SPACE BEAMS EQUALLY UNLESS DIMENSIONED OTHERWISE.

SRJV
MAR 03 2014
ISSUED FOR CONSTRUCTION

MAP CASE CANOPY PLAN 2 S-S7-131
1/4"=1'-0"

THE PREPARATION OF THIS DRAWING HAS BEEN FINANCED BY THE TAXES OF THE CITIZENS OF LOS ANGELES COUNTY AND OF THE STATE OF CALIFORNIA.

REV	DATE	BY	APP	REG NO	EXPIRES	SEAL HOLDER	DESCRIPTION
0	1/8/14	FL	KW	2870	9/30/13	KEN WONG	ECI 79
~~1~~	~~7/30/13~~	~~FL~~	~~KW~~	~~2870~~	~~9/30/13~~	~~KEN WONG~~	~~ECI 17~~
~~0~~	~~5/30/13~~	~~FL~~	~~KW~~	~~2870~~	~~9/30/13~~	~~KEN WONG~~	~~APPROVED FOR CONSTRUCTION~~

DESIGNED BY D. YOON
DRAWN BY E. RAMIREZ
CHECKED BY D. KATHURIA
IN CHARGE K.WONG
DATE 5/30/13

REGISTERED PROFESSIONAL ENGINEER KENNETH N. WONG No. 2870 Exp 09/30/13 STRUCTURAL STATE OF CALIFORNIA

Exposition Metro Line Construction Authority
Expo
Exposition Construction Authority Approved for Construction Drawings - AFC
FEB 28 2014

EXPO SKANSKA RADOS
444 South Flower Street
Suite 2200
Los Angeles, CA 90071
TEL (213) 443-7463
FAX (213) 362-9481

PARSONS BRINCKERHOFF
miyamoto. 700 South Flower Street, Suite 1010 Los Angeles, CA 90017 T: (213) 362-7778 miyamotointernational.com
MI0902064.05
CURRENT STATUS

EXPOSITION LRT PROJECT- PHASE 2
COLORADO/4TH STREET STATION
STRUCTURAL
FARE BARRIER PLAN AND ELEVATIONS

CONTRACT NO XP8902-002
DRAWING NO S-S7-131
REV 0
SCALE 1/4"=1'-0"
SHEET NO

7-Jan-14 1:20 PM Edgar Ramirez

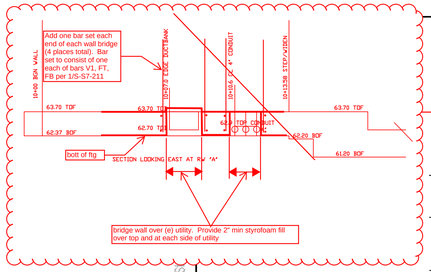

(DRFI 10486)

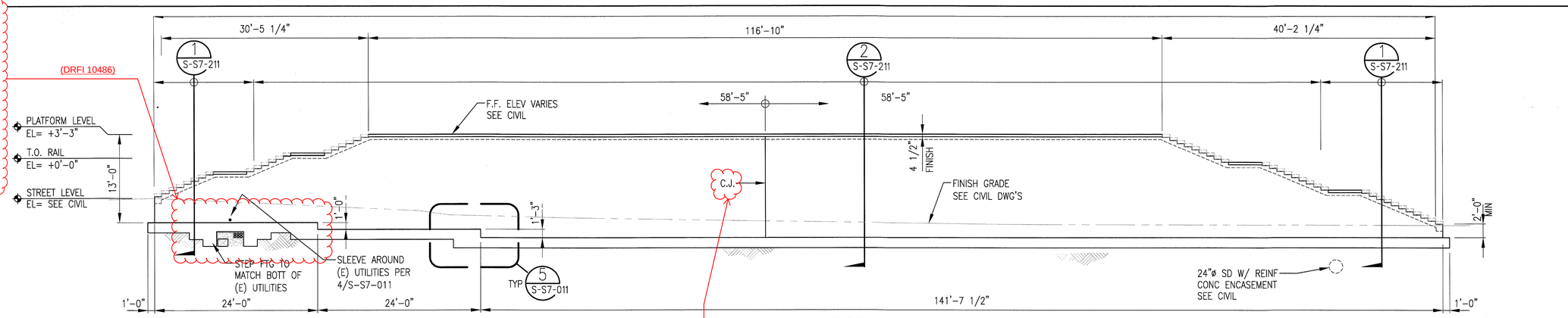

WEST WALL ELEVATION AT STAIRS-WALL "A"

1/8"=1'-0"

1 S-S7-201

(DRFI 10382)

EXPANSION JOINTS

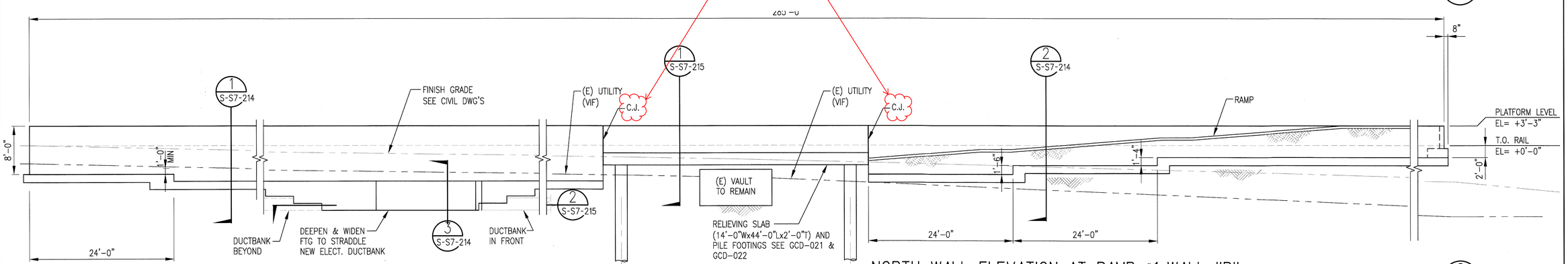

NORTH WALL ELEVATION AT RAMP #1-WALL "B"

1/8"=1'-0"

2 S-S7-201

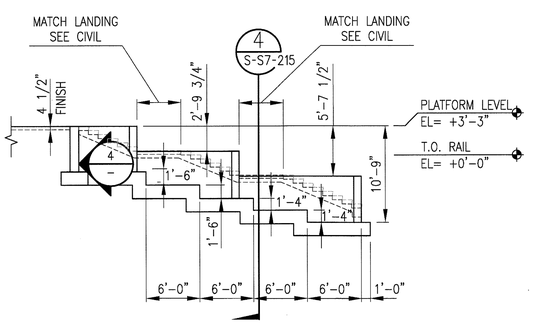

WALL "E"

1/8"=1'-0"

5 S-S7-201

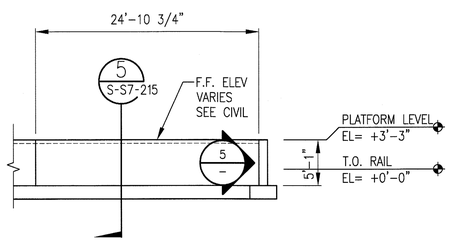

WALL "D"

1/8"=1'-0"

4 S-S7-201

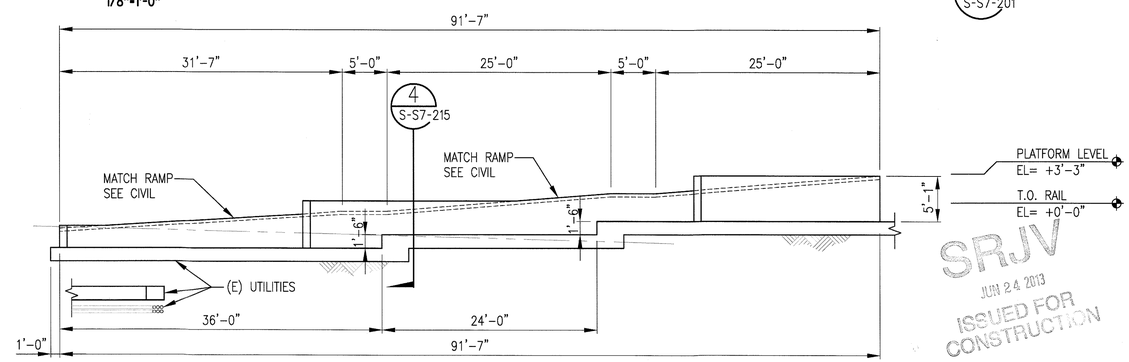

SRJV JUN 24 2013 ISSUED FOR CONSTRUCTION

NORTH WALL ELEVATION AT RAMP #1-WALL "C"

1/8"=1'-0"

3 S-S7-201

THE PREPARATION OF THIS DRAWING HAS BEEN FINANCED BY THE TAXES OF THE CITIZENS OF LOS ANGELES COUNTY AND OF THE STATE OF CALIFORNIA.

REV	DATE	BY	APP	REG NO	EXPIRES	SEAL HOLDER	DESCRIPTION
0	5/30/13	FL	KW	2870	9/30/13	KEN WONG	APPROVED FOR CONSTRUCTION

DESIGNED BY D. YOON
DRAWN BY E. RAMIREZ
CHECKED BY D. KATHURIA
IN CHARGE K.WONG
DATE 5/30/13

REGISTERED PROFESSIONAL ENGINEER KENNETH N. WONG No. 2870 Exp 09/30/13 STRUCTURAL STATE OF CALIFORNIA

Exposition Metro Line Construction Authority
Expo
Exposition Construction Authority Approved for Construction Drawings - AFC
JUN 21 2013

EXPO SKANSKA RADOS

444 South Flower Street
Suite 2200
Los Angeles, CA 90071
TEL (213) 443-7463
FAX (213) 362-9481

PARSONS BRINCKERHOFF

miyamoto 2631 Beverly Blvd. 2nd Floor, Los Angeles, CA 90057 T: (213) 362-7778 miyamotointernational.com
M09020084.03

EXPOSITION LRT PROJECT- PHASE 2
COLORADO/4TH STREET STATION
STRUCTURAL
WALL ELEVATIONS

CONTRACT NO XP8902-002
DRAWING NO S-S7-201
REV 0
SCALE AS NOTED
SHEET NO

I:\2109\M\09020084.03 Metro Expo Line Phase 2 Stage B\Drawings\11 S

30-May-13 2:38 PM Edgar Ramirez

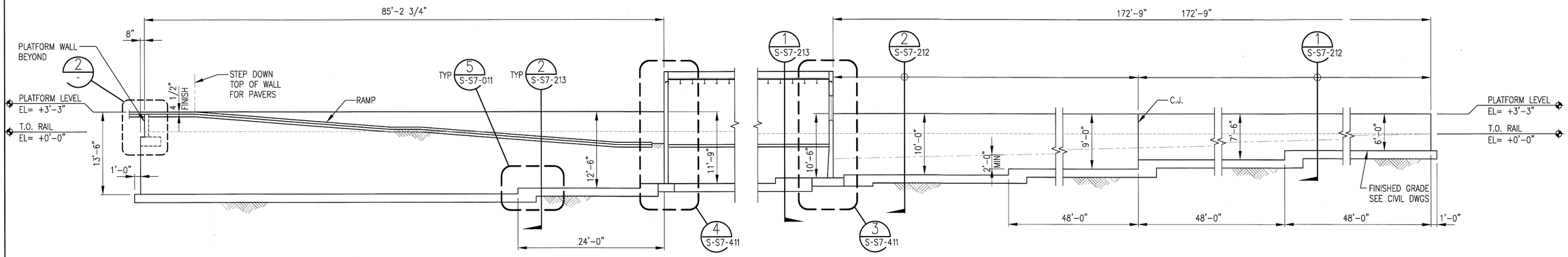

SOUTH WALL ELEVATION AT RAMP-WALL "F"

1/8"=1'-0"

1 S-S7-202

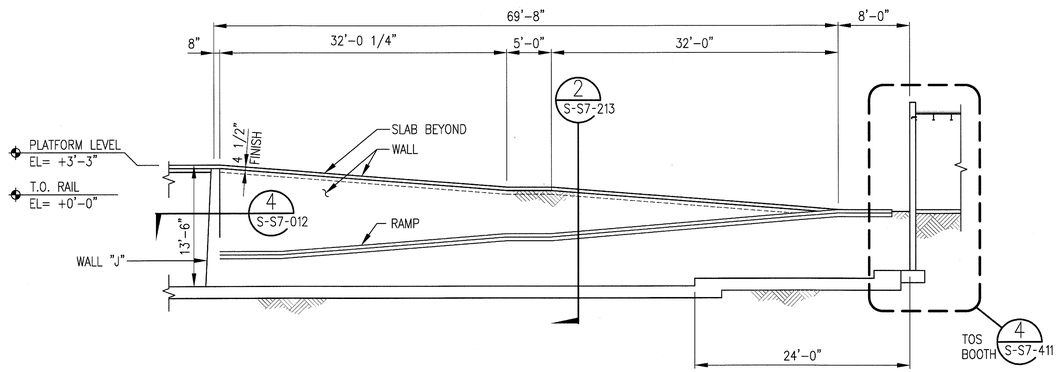

SOUTH WALL ELEVATION AT RAMP-WALL "G"

1/8"=1'-0"

4 S-S7-202

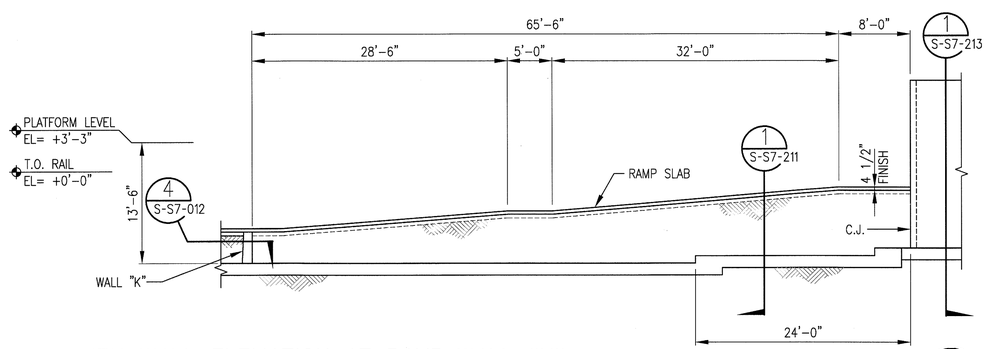

SOUTH WALL ELEVATION AT RAMP-WALL "H"

1/8"=1'-0"

5 S-S7-202

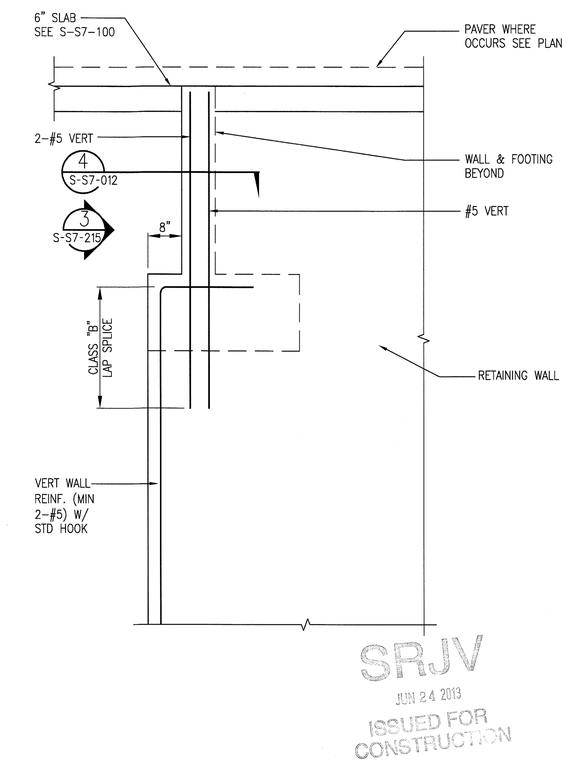

ELEVATION AT CORNER

3/4"=1'-0"

2 S-S7-202

THE PREPARATION OF THIS DRAWING HAS BEEN FINANCED BY THE TAXES OF THE CITIZENS OF LOS ANGELES COUNTY AND OF THE STATE OF CALIFORNIA.

REV	DATE	BY	APP	REG NO	EXPIRES	SEAL HOLDER	DESCRIPTION
0	5/30/13	FL	KW	2870	9/30/13	KEN WONG	APPROVED FOR CONSTRUCTION

DESIGNED BY D. YOON
DRAWN BY E. RAMIREZ
CHECKED BY D. KATHURIA
IN CHARGE K.WONG
DATE 5/30/13

REGISTERED PROFESSIONAL ENGINEER KENNETH N. WONG No. 2870 Exp 09/30/13 STRUCTURAL STATE OF CALIFORNIA

Exposition Metro Line Construction Authority
Expo
Exposition Construction Authority
Approved for Construction
Drawings - AFC
JUN 21 2013

EXPO SKANSKA RADOS
444 South Flower Street
Suite 2200
Los Angeles, CA 90071
TEL (213) 443-7463
FAX (213) 362-9481

PARSONS BRINCKERHOFF
miyamoto 700 South Flower Street, Suite 1010 Los Angeles, CA 90071 T: (213) 362-7778 miyamotointernational.com
MI09020564.03

CORRECTIONS

EXPOSITION LRT PROJECT- PHASE 2
COLORADO/4TH STREET STATION
STRUCTURAL
WALL ELEVATIONS

CONTRACT NO XP8902-002
DRAWING NO S-S7-202
REV 0
SCALE AS NOTED
SHEET NO

I:\2009\MI09020564.03 Metro Expo Line Phase 2 Stage B\Drawings\1 Structural\07 Colorado 4th Street Station\expo2-S-S7-202.dw
30-May-13 2:39 PM Edgar Ramirez

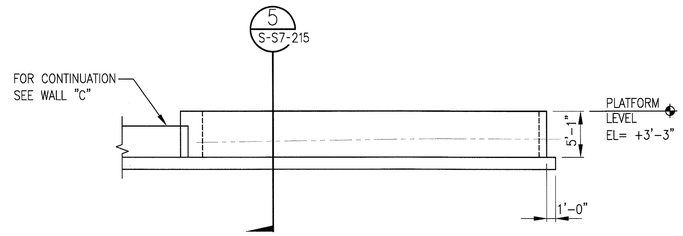

ELEVATION AT PLANTER-WALL "N" (4 / S-S7-203)
1/8"=1'-0"

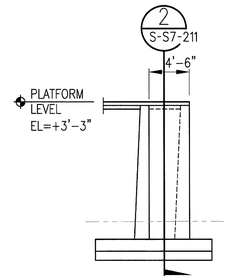

ELEVATION-
WALL "CC" (1A / S-S7-203)
1/8"=1'-0"

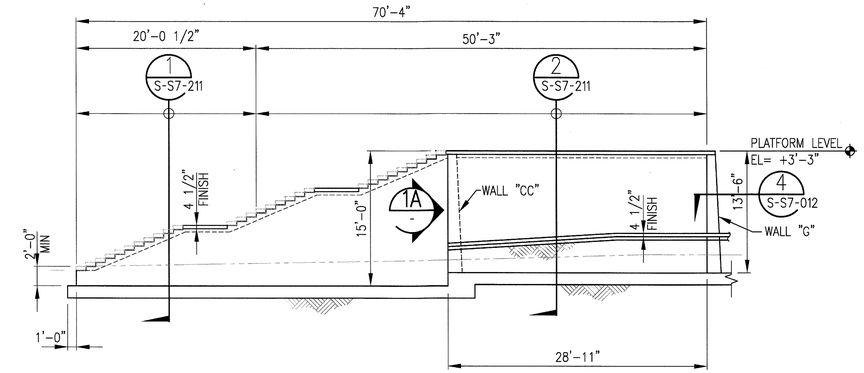

EAST WALL ELEVATION AT STAIRS AND RAMP-WALL "J" (1 / S-S7-203)
1/8"=1'-0"

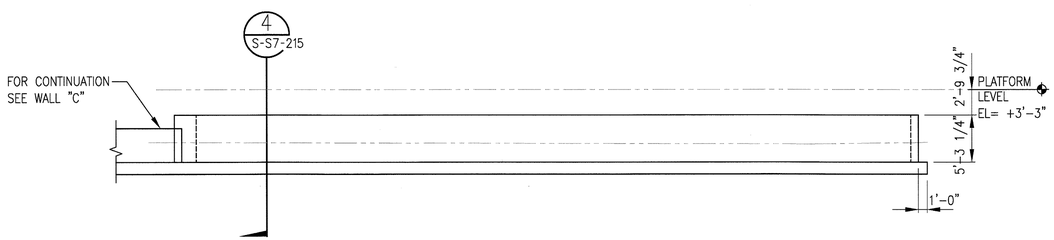

ELEVATION AT PLANTER-WALL "M" (5 / S-S7-203)
1/8"=1'-0"

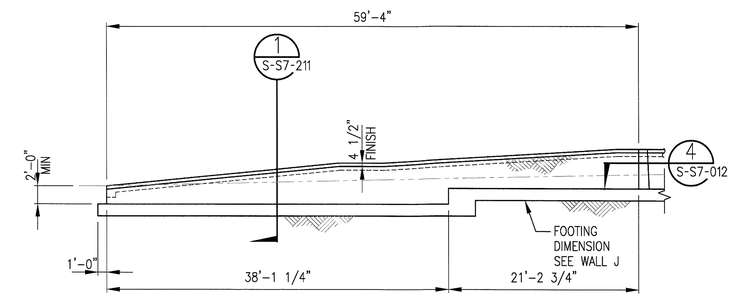

EAST WALL ELEVATION AT RAMP-WALL "K" (2 / S-S7-203)
1/8"=1'-0"

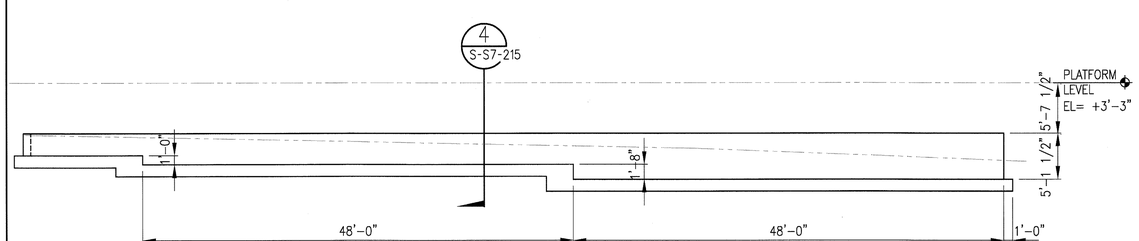

ELEVATION AT PLANTER-WALL "L" (6 / S-S7-203)
1/8"=1'-0"

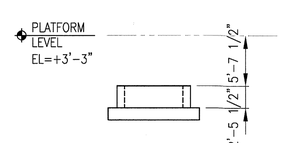

ELEVATION
WALL "P" (6A / S-S7-203)
1/8"=1'-0"

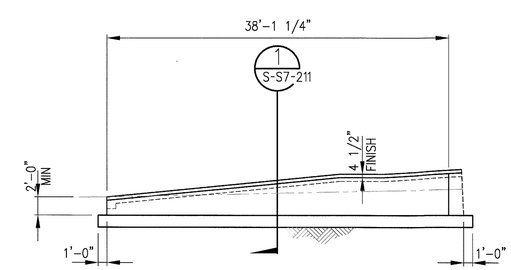

EAST WALL ELEVATION AT RAMP-WALL "L" (3 / S-S7-203)
1/8"=1'-0"

SRJV
JUN 24 2013
ISSUED FOR CONSTRUCTION

THE PREPARATION OF THIS DRAWING HAS BEEN FINANCED BY THE TAXES OF THE CITIZENS OF LOS ANGELES COUNTY AND OF THE STATE OF CALIFORNIA.

REV	DATE	BY	APP	REG NO	EXPIRES	SEAL HOLDER	DESCRIPTION
0	5/30/13	FL	KW	2870	9/30/13	KEN WONG	APPROVED FOR CONSTRUCTION

DESIGNED BY D. YOON
DRAWN BY E. RAMIREZ
CHECKED BY D. KATHURIA
IN CHARGE K.WONG
DATE 5/30/13

REGISTERED PROFESSIONAL ENGINEER KENNETH N. WONG No. 2870 Exp 09/30/13 STRUCTURAL STATE OF CALIFORNIA

Exposition Metro Line Construction Authority
Expo
Exposition Construction Authority Approved for Construction Drawings - AFC JUN 21 2013

EXPO SKANSKA RADOS
444 South Flower Street
Suite 2200
Los Angeles, CA 90071
TEL (213) 443-7463
FAX (213) 362-9481

PARSONS BRINCKERHOFF
miyamoto 700 South Flower Street, Suite 1010 Los Angeles, CA 90017 T: (213) 362-7778 www.miyamotointernational.com
MI0902064.03

CORRECTED SET

EXPOSITION LRT PROJECT- PHASE 2
COLORADO/4TH STREET STATION
STRUCTURAL
WALL ELEVATIONS

CONTRACT NO XP8902-002
DRAWING NO S-S7-203
REV 0
SCALE AS NOTED
SHEET NO

I:\20109MI0902064.03 Metro Expo Line Phase 2 Stage B\Drawings\1 Structural\07 Colorado, 4th Street Station\expo2-S-S7-203.dw
Edgar Ramirez 2:39 PM 30-May-13

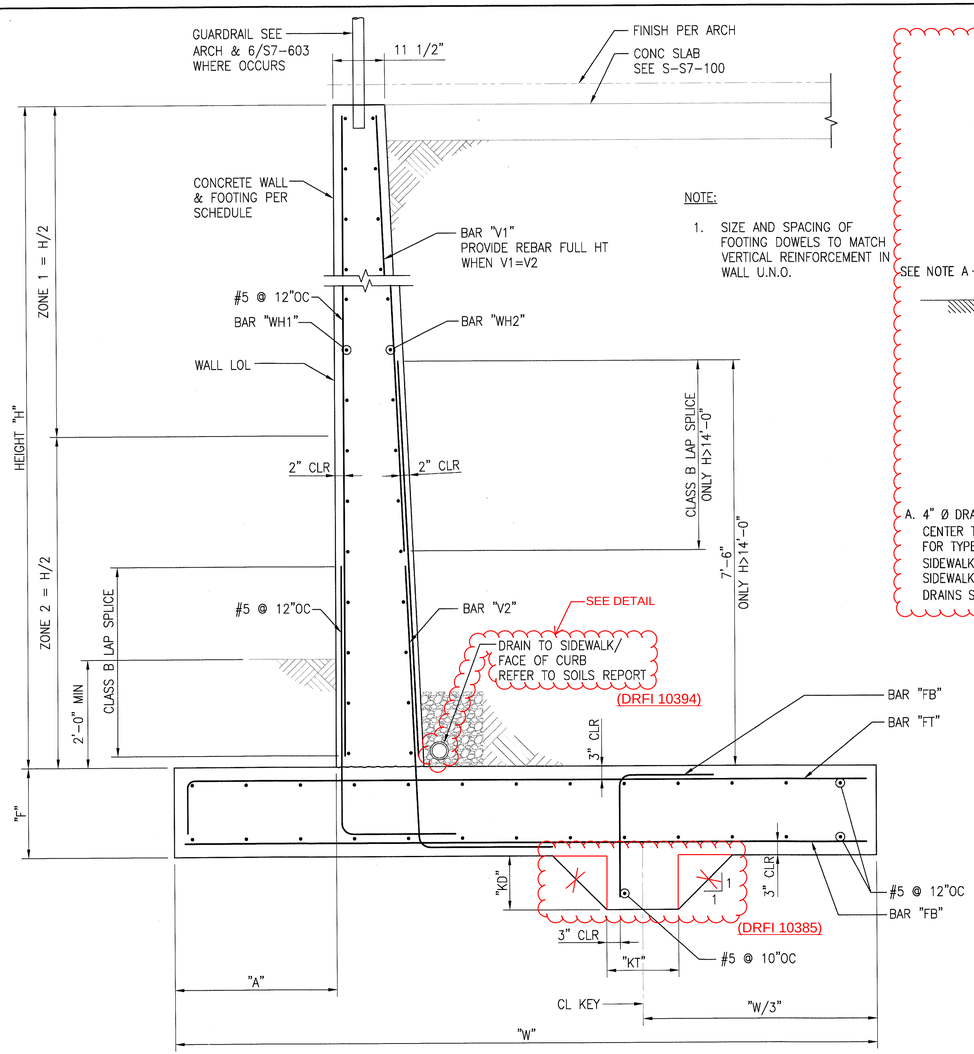

NOTE:

1. SIZE AND SPACING OF FOOTING DOWELS TO MATCH VERTICAL REINFORCEMENT IN WALL U.N.O.

(DRFI 10394)

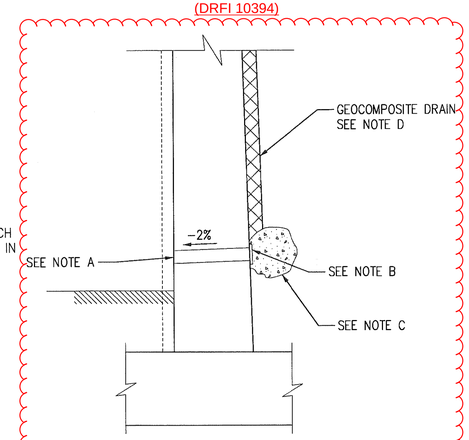

DETAIL B

NTS

A. 4" Ø DRAINS @ 25'-0" MAXIMUM CENTER TO CENTER, 9'-0" CENTER TO CENTER FOR TYPE 3 AND 9'-3" CENTER TO CENTER FOR TYPE 4 RETAINING WALLS. FOR WALLS ADJACENT TO SIDEWALKS OR CURBS, PROVIDE 4" PLASTIC PIPE UNDER THE SIDEWALK TO DISCHARGE THRU CURB FACE. EXPOSED WALL DRAINS SHALL BE LOCATED 3"± ABOVE FINISHED GRADE.

NOTE:

1. SIZE AND SPACING OF FOOTING DOWELS TO MATCH VERTICAL REINFORCEMENT IN WALL U.N.O.

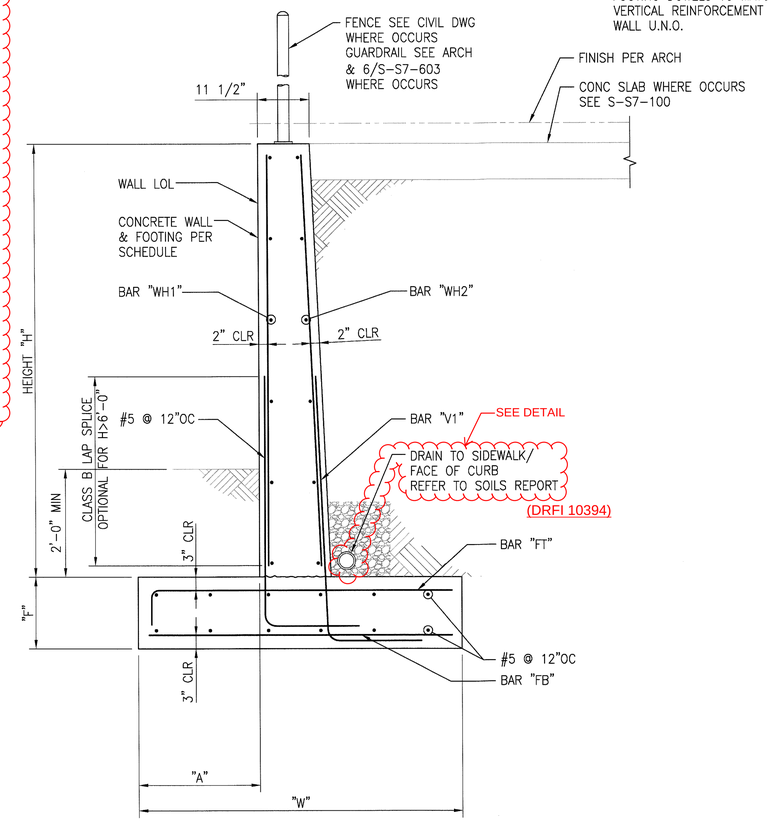

WALL SCHEDULE														
H	W (ft)	A (in)	F (in)	BATTER	KD (in)	KT (in)	FT	FB	V1	V2	WH1, ZONE 1	WH1, ZONE 2	WH2, ZONE 1	WH2, ZONE 2
8'-1" TO 10'-0"	7'-0"	30"	16"	1/2:12	8"	16"	#6 @ 9"	#5 @ 9"	#6 @ 9"	#6 @ 9"	#5 @ 18"	#5 @ 18"	#5 @ 18"	#5 @ 18"
10'-1" TO 12'-0"	9'-3"	30"	18"	1/2:12	12"	16"	#7 @ 9"	#5 @ 9"	#7 @ 9"	#7 @ 9"	#5 @ 18"	#5 @ 16"	#5 @ 18"	#5 @ 16"
12'-1" TO 14'-0"	11'-9"	30"	20"	1/2:12	12"	16"	#7 @ 6"	#5 @ 6"	#7 @ 6"	#7 @ 6"	#5 @ 18"	#5 @ 16"	#5 @ 18"	#5 @ 16"
14'-1" TO ~~15'-0"~~	13'-0"	30"	20"	1/2:12	12"	16"	#10 @ 9"	#5 @ 6"	#10 @ 18"	#10 @ 9"	#5 @ 18"	#5 @ 16"	#5 @ 18"	#5 @ 16"

15'-3" (DRFI 10387)

RETAINING WALL SECTION

3/4"=1'-0"

2 S-S7-211

WALL SCHEDULE									
H	W (ft)	A (in)	F (in)	BATTER	FT	FB	V1	WH1	WH2
0' TO 4'-0"	4'-0"	18"	16"	1/2:12	#5 @ 9"	#5 @ 9"	#6 @ 9"	#5 @ 18"	#4 @ 18"
4'-1" TO 6'-0"	5'-3"	21"	16"	1/2:12	#5 @ 9"	#5 @ 9"	#6 @ 9"	#5 @ 18"	#5 @ 18"
6'-1" TO 8'-0"	6'-6"	30"	16"	1/2:12	#6 @ 9"	#5 @ 9"	#6 @ 9"	#5 @ 18"	#5 @ 18"

SRJV
JUN 24 2013
ISSUED FOR CONSTRUCTION

RETAINING WALL SECTION

3/4"=1'-0"

1 S-S7-211

THE PREPARATION OF THIS DRAWING HAS BEEN FINANCED BY THE TAXES OF THE CITIZENS OF LOS ANGELES COUNTY AND OF THE STATE OF CALIFORNIA.

REV	DATE	BY	APP	REG NO	EXPIRES	SEAL HOLDER	DESCRIPTION
0	5/30/13	FL	KW	2870	9/30/13	KEN WONG	APPROVED FOR CONSTRUCTION

DESIGNED BY D. YOON
DRAWN BY E. RAMIREZ
CHECKED BY D. KATHURIA
IN CHARGE K.WONG
DATE 5/30/13

REGISTERED PROFESSIONAL ENGINEER KENNETH N. WONG No. 2870 Exp 09/30/13 STRUCTURAL STATE OF CALIFORNIA

Exposition Metro Line Construction Authority
Expo
Exposition Construction Authority Approved for Construction Drawings - AFC
JUN 21 2013

EXPO SKANSKA RADOS
444 South Flower Street
Suite 2200
Los Angeles, CA 90071
TEL (213) 443-7463
FAX (213) 362-9481

PARSONS BRINCKERHOFF
miyamoto 700 South Flower Street, Suite 1010 T: (213) 362-7778 Los Angeles, CA 90017 info@miyamotointernational.com
MI0902064.03
CURRENT STATUS

EXPOSITION LRT PROJECT- PHASE 2
COLORADO/4TH STREET STATION
STRUCTURAL
RETAINING WALL SECTIONS

CONTRACT NO XP8902-002
DRAWING NO S-S7-211
REV 0
SCALE AS NOTED
SHEET NO

I:\20089\MI0902064.03 Metro Expo Line Phase 2 Stage B\Drawings\1 Structural\07 Colorado_4th Street Station\exp02-S-S7-211.dgn
30-May-13 2:39 PM Edgar Ramirez

I:\20091\M09202064.03 Metro Expo Line Phase 2 Stage B\Drawings\1 Structural\07 Colorado_4th Street Station\expo2-S-S7-212.dw

NOTE:

1. SIZE AND SPACING OF FOOTING DOWELS TO MATCH VERTICAL REINFORCEMENT IN WALL U.N.O.

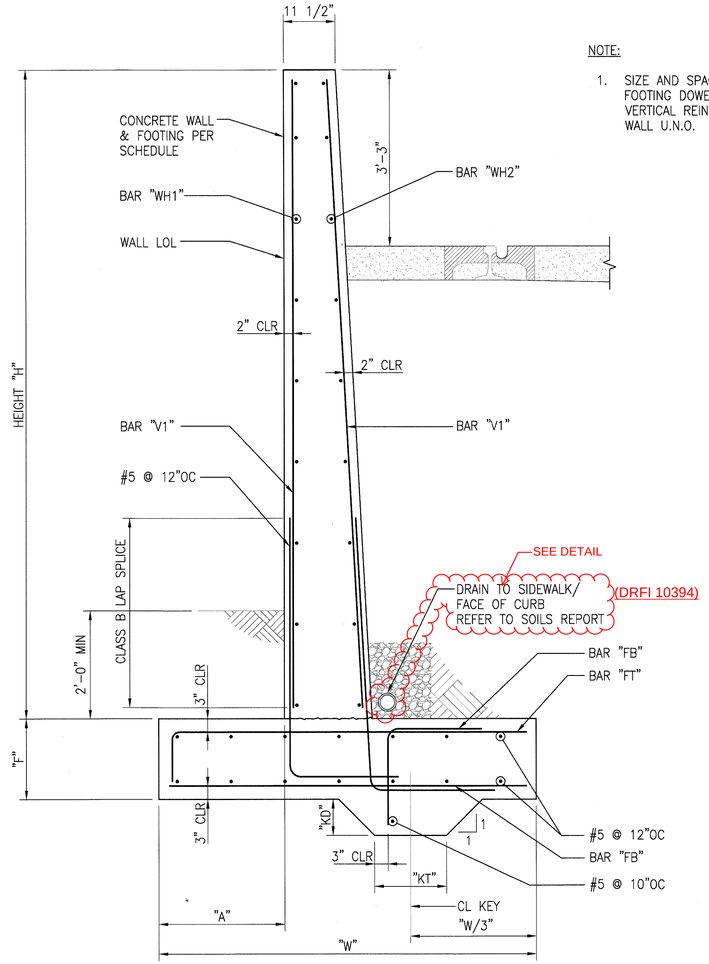

(DRFI 10394)

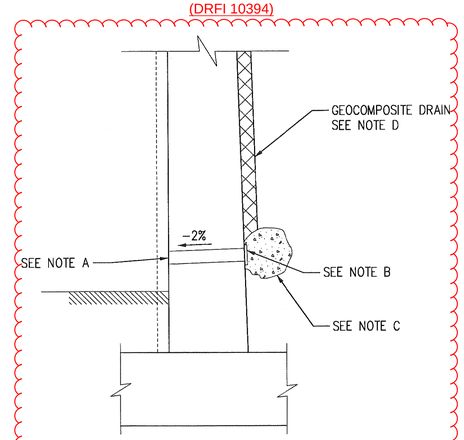

DETAIL B

NTS

A. 4" Ø DRAINS @ 25'-0" MAXIMUM CENTER TO CENTER, 9'-0" CENTER TO CENTER FOR TYPE 3 AND 9'-3" CENTER TO CENTER FOR TYPE 4 RETAINING WALLS. FOR WALLS ADJACENT TO SIDEWALKS OR CURBS, PROVIDE 4" PLASTIC PIPE UNDER THE SIDEWALK TO DISCHARGE THRU CURB FACE. EXPOSED WALL DRAINS SHALL BE LOCATED 3"± ABOVE FINISHED GRADE.

WALL SCHEDULE													
H	W (ft)	A (in)	F (in)	BATTER	KD (in)	KT (in)	FT	FB	V1	WH1, ZONE 1	WH1, ZONE 2	WH2, ZONE 1	WH2, ZONE 2
8'-1" TO 10'-0"	7'-3"	30"	18"	1/2:12	8"	16"	#6 @ 9"	#5 @ 9"	#6 @ 9"	#5 @ 18"	#5 @ 18"	#5 @ 18"	#5 @ 18"

RETAINING WALL SECTION 2

3/4"=1'-0" S-S7-212

NOTE:

1. SIZE AND SPACING OF FOOTING DOWELS TO MATCH VERTICAL REINFORCEMENT IN WALL U.N.O.

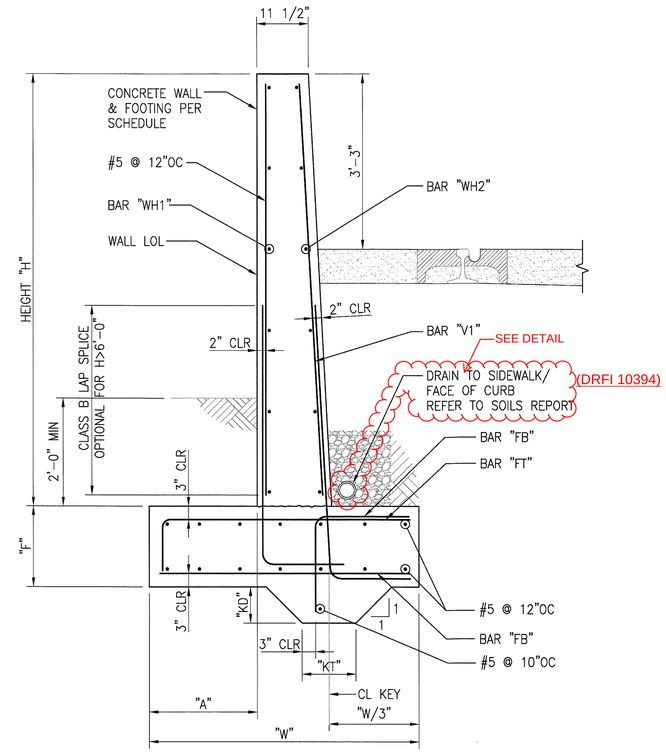

WALL SCHEDULE											
H	W (ft)	A (in)	F (in)	BATTER	KD (in)	KT (in)	FT	FB	V1	WH1	WH2
0" TO 6'-0"	4'-3"	18"	16"	1/2:12	–	–	#5 @ 9"	#5 @ 9"	#6 @ 9"	#5 @ 18"	#5 @ 18"
6'-1" TO 8'-0"	5'-9"	24"	16"	1/2:12	8"	16"	#5 @ 9"	#5 @ 9"	#6 @ 9"	#5 @ 18"	#5 @ 18"

SRJV
JUN 24 2013
ISSUED FOR CONSTRUCTION

RETAINING WALL SECTION 1

3/4"=1'-0" S-S7-212

THE PREPARATION OF THIS DRAWING HAS BEEN FINANCED BY THE TAXES OF THE CITIZENS OF LOS ANGELES COUNTY AND OF THE STATE OF CALIFORNIA.

REV	DATE	BY	APP	REG NO	EXPIRES	SEAL HOLDER	DESCRIPTION
0	5/30/13	FL	KW	2870	9/30/13	KEN WONG	APPROVED FOR CONSTRUCTION

DESIGNED BY D. YOON
DRAWN BY E. RAMIREZ
CHECKED BY D. KATHURIA
IN CHARGE K.WONG
DATE 5/30/13

REGISTERED PROFESSIONAL ENGINEER KENNETH N. WONG No. 2870 Exp 09/30/13 STRUCTURAL STATE OF CALIFORNIA

Exposition Metro Line Construction Authority
Expo
Exposition Construction Authority Approved for Construction Drawings - AFC
JUN 21 2013
EXPO SKANSKA RADOS
444 South Flower Street Suite 2200 Los Angeles, CA 90071 TEL (213) 443-7463 FAX (213) 362-9481
PARSONS BRINCKERHOFF
miyamoto 700 South Flower Street, Suite 1010 T: (213) 362-7778 Los Angeles, CA 90017 www.miyamotointernational.com
M10902064.03

EXPOSITION LRT PROJECT- PHASE 2
COLORADO/4TH STREET STATION
STRUCTURAL
RETAINING WALL SECTIONS

CONTRACT NO XP8902-002
DRAWING NO S-S7-212
REV 0
SCALE AS NOTED
SHEET NO

Edgar Ramirez 2:39 PM 30-May-13

(DRFI 10394)

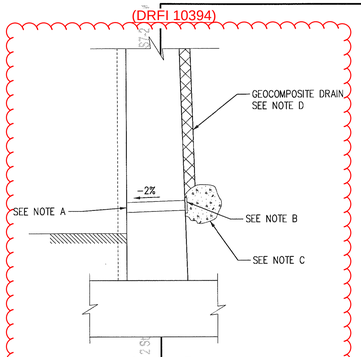

DETAIL B

NTS

A. 4" Ø DRAINS @ 25'-0" MAXIMUM CENTER TO CENTER, 9'-0" CENTER TO CENTER FOR TYPE 3 AND 9'-3" CENTER TO CENTER FOR TYPE 4 RETAINING WALLS. FOR WALLS ADJACENT TO SIDEWALKS OR CURBS, PROVIDE 4" PLASTIC PIPE UNDER THE SIDEWALK TO DISCHARGE THRU CURB FACE. EXPOSED WALL DRAINS SHALL BE LOCATED 3"± ABOVE FINISHED GRADE.

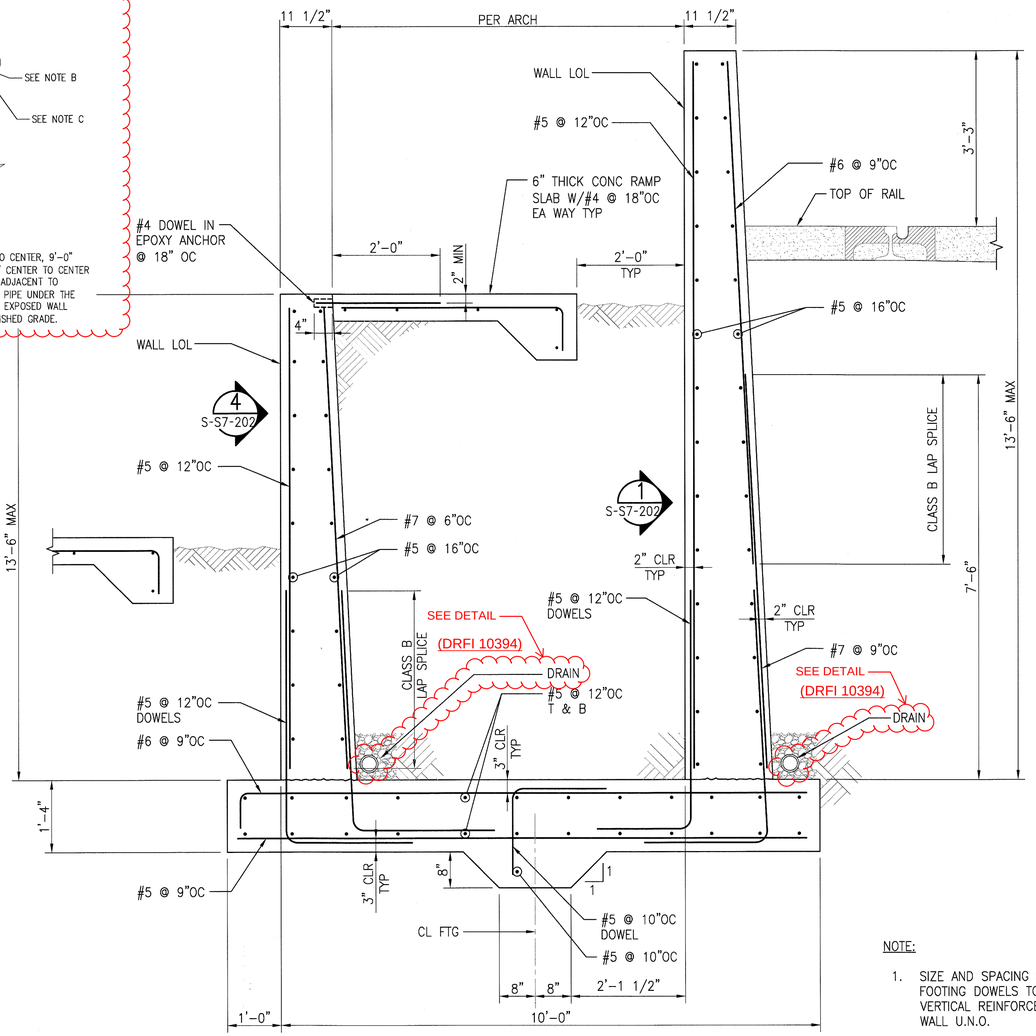

NOTE:

1. SIZE AND SPACING OF FOOTING DOWELS TO MATCH VERTICAL REINFORCEMENT IN WALL U.N.O.

RETAINING WALL SECTION

3/4"=1'-0"

2 S-S7-213

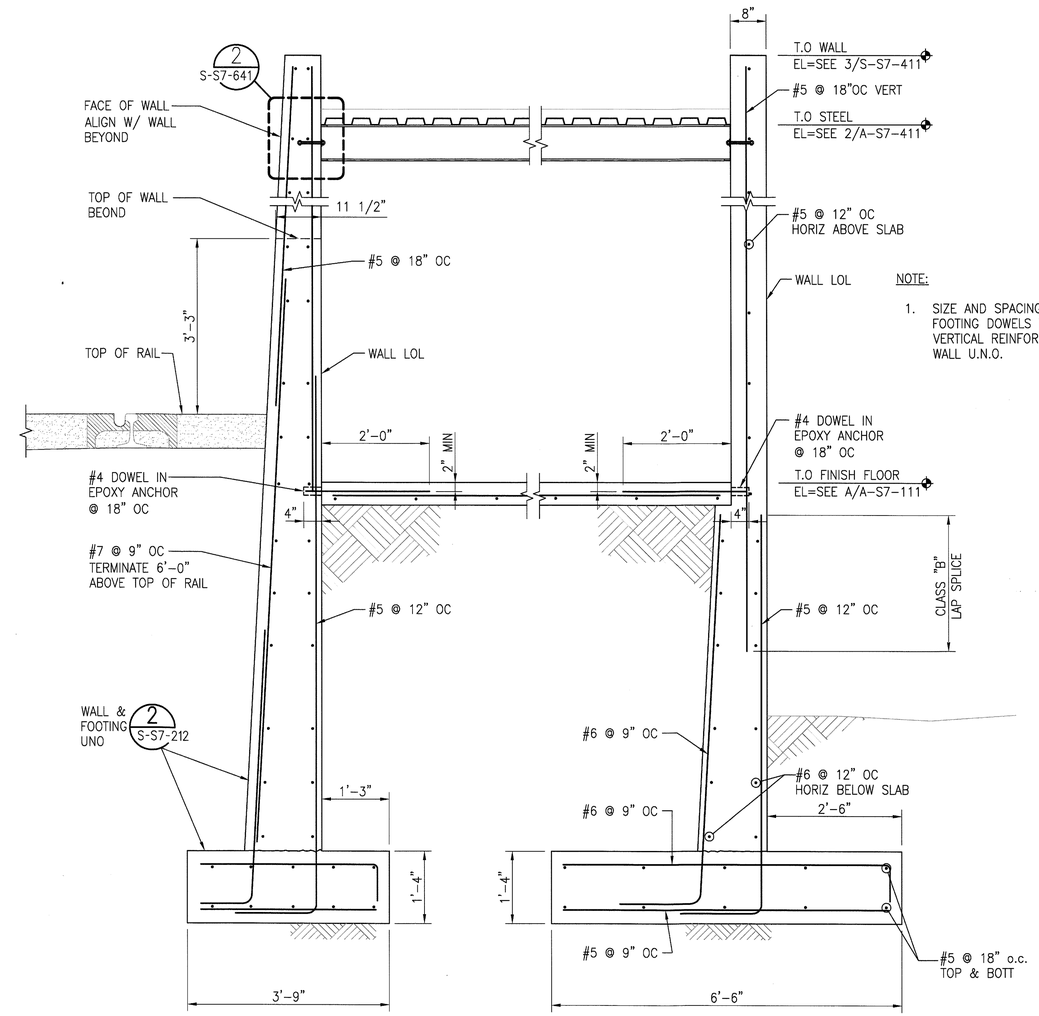

NOTE:

1. SIZE AND SPACING OF FOOTING DOWELS TO MATCH VERTICAL REINFORCEMENT IN WALL U.N.O.

SRJV
JUN 24 2013
ISSUED FOR CONSTRUCTION

RETAINING WALL SECTION

3/4"=1'-0"

1 S-S7-213

THE PREPARATION OF THIS DRAWING HAS BEEN FINANCED BY THE TAXES OF THE CITIZENS OF LOS ANGELES COUNTY AND OF THE STATE OF CALIFORNIA.

REV	DATE	BY	APP	REG NO	EXPIRES	SEAL HOLDER	DESCRIPTION
0	5/30/13	FL	KW	2870	9/30/13	KEN WONG	APPROVED FOR CONSTRUCTION

DESIGNED BY D. YOON
DRAWN BY E. RAMIREZ
CHECKED BY D. KATHURIA
IN CHARGE K.WONG
DATE 5/30/13

REGISTERED PROFESSIONAL ENGINEER KENNETH N. WONG No. 2870 Exp 09/30/13 STRUCTURAL STATE OF CALIFORNIA

Exposition Metro Line Construction Authority
Expo
Exposition Construction Authority Approved for Construction Drawings - AFC
JUN 21 2013

EXPO SKANSKA RADOS

444 South Flower Street
Suite 2200
Los Angeles, CA 90071
TEL (213) 443-7463
FAX (213) 362-9481

PARSONS BRINCKERHOFF

miyamoto 700 South Flower Street, Suite 1010 T: (213) 362-7778 Los Angeles, CA 90017 www.miyamotointernational.com
M10902064.03

CORRECTION

EXPOSITION LRT PROJECT- PHASE 2
COLORADO/4TH STREET STATION
STRUCTURAL
RETAINING WALL SECTIONS

CONTRACT NO XP8902-002
DRAWING NO S-S7-213
REV 0
SCALE AS NOTED
SHEET NO

30-May-13 2:33 PM Edgar Ramirez

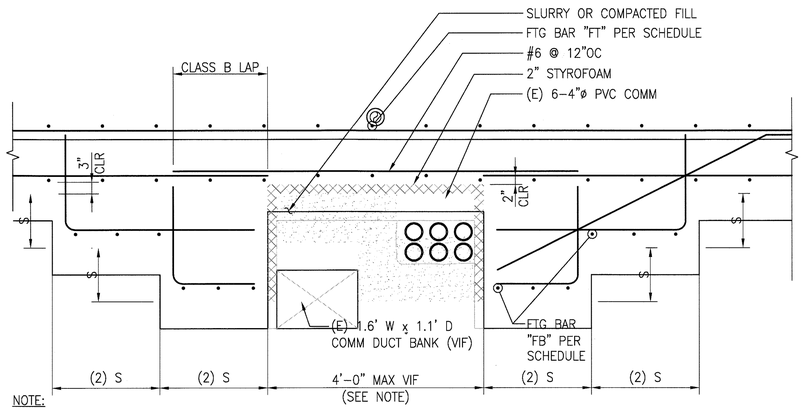

NOTE:

IF HORIZONTAL CLEARANCE BETWEEN COMM. DUCT BANK AND 4" PVC EXCEEDS 16", PROVIDE SEPARATE BLOCKOUTS FOR EACH.

SECTION 4 / S-S7-214
3/4"=1'-0"

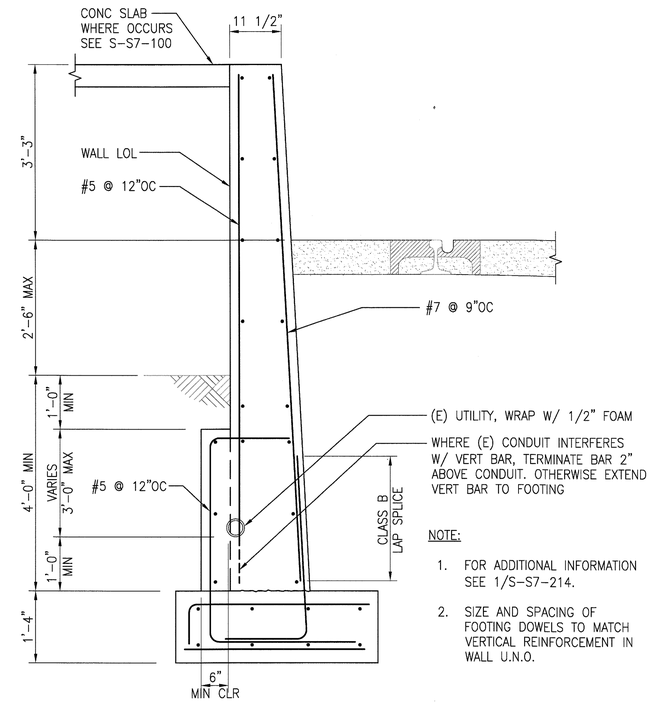

NOTE:

1. FOR ADDITIONAL INFORMATION SEE 1/S-S7-214.
2. SIZE AND SPACING OF FOOTING DOWELS TO MATCH VERTICAL REINFORCEMENT IN WALL U.N.O.

NORTH RETAINING WALL SECTION 2 / S-S7-214
3/4"=1'-0"

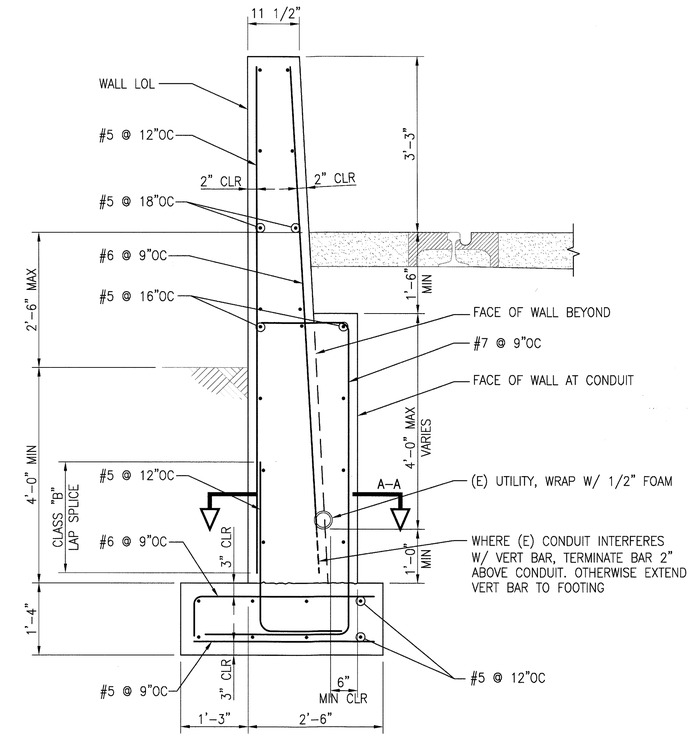

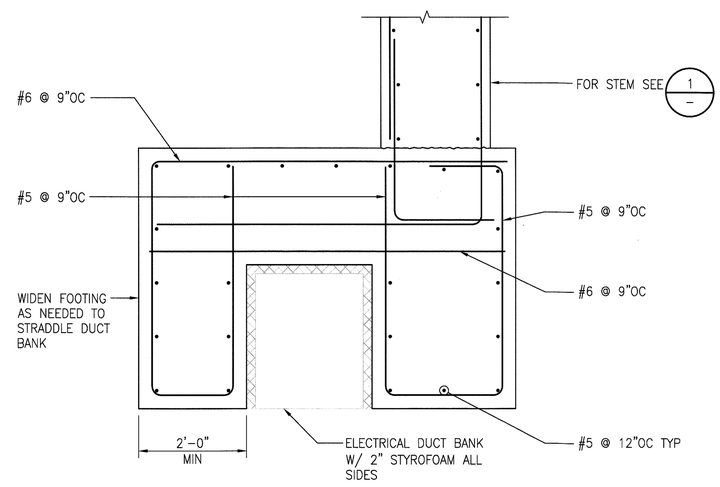

SECTION 3 / S-S7-214
3/4"=1'-0"

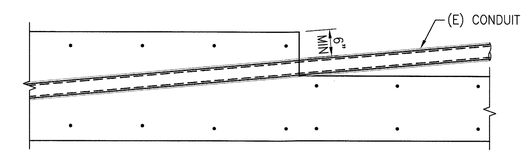

PLAN VIEW A-A

NORTH RETAINING WALL SECTION 1 / S-S7-214
3/4"=1'-0"

SRJV
JUN 24 2013
ISSUED FOR CONSTRUCTION

THE PREPARATION OF THIS DRAWING HAS BEEN FINANCED BY THE TAXES OF THE CITIZENS OF LOS ANGELES COUNTY AND OF THE STATE OF CALIFORNIA.

REV	DATE	BY	APP	REG NO	EXPIRES	SEAL HOLDER	DESCRIPTION
0	5/30/13	FL	KW	2870	9/30/13	KEN WONG	APPROVED FOR CONSTRUCTION

DESIGNED BY D. YOON
DRAWN BY E. RAMIREZ
CHECKED BY D. KATHURIA
IN CHARGE K.WONG
DATE 5/30/13

REGISTERED PROFESSIONAL ENGINEER KENNETH N. WONG No. 2870 Exp. 09/30/13 STRUCTURAL STATE OF CALIFORNIA

Exposition Metro Line Construction Authority
Expo
Exposition Construction Authority Approved for Construction Drawings - AFC
JUN 21 2013
EXPO SKANSKA RADOS
444 South Flower Street
Suite 2200
Los Angeles, CA 90071
TEL (213) 443-7463
FAX (213) 362-9481
PARSONS BRINCKERHOFF
miyamoto 750 South Flower Street, Suite 1015 Los Angeles, CA 90017 T: (213) 362-7778 miyamotointernational.com
MI09C2064.03

EXPOSITION LRT PROJECT- PHASE 2
COLORADO/4TH STREET STATION
STRUCTURAL
RETAINING WALL SECTIONS

CONTRACT NO XP8902-002
DRAWING NO S-S7-214
REV 0
SCALE AS NOTED
SHEET NO

I:\2009\MI09C2064.03 Metro Expo Line Phase 2 Stage B\Drawings\1 Structural\07 Colorado 4th Street Station\expo2-S-S7-214.dw
30-May-13 2:40 PM Edgar Ramirez

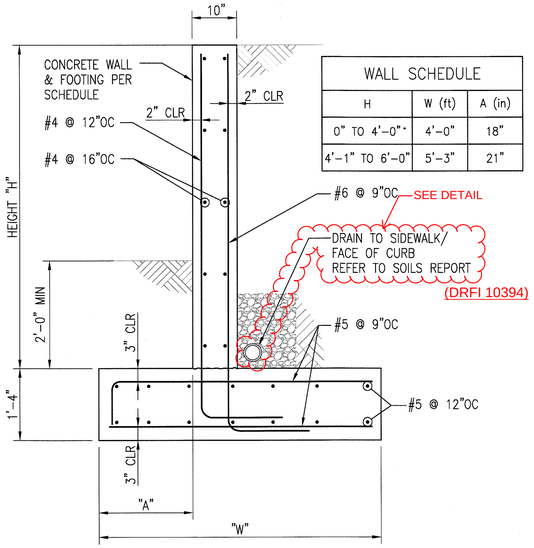

WALL SCHEDULE		
H	W (ft)	A (in)
0" TO 4'-0"	4'-0"	18"
4'-1" TO 6'-0"	5'-3"	21"

PLANTER WALL SECTION

3/4"=1'-0"

4 / S-S7-215

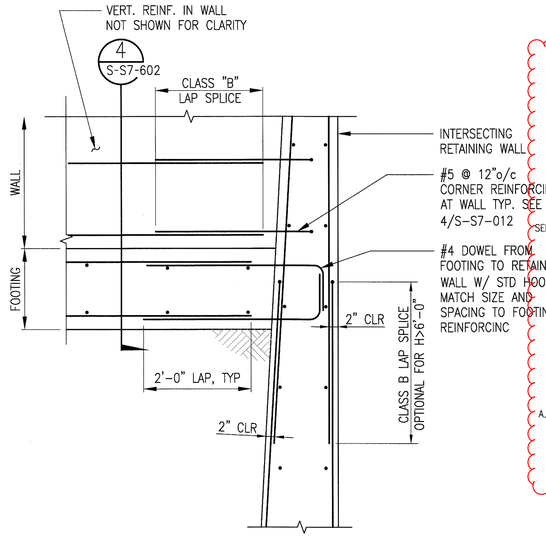

WALL AND FOOTING CONNECTION TO RETAINING WALL

3/4"=1'-0"

3 / S-S7-215

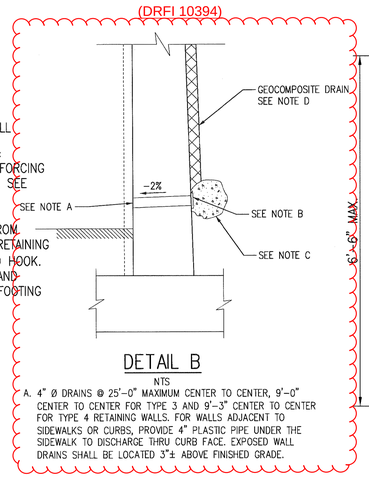

DETAIL B

NTS

A. 4" Ø DRAINS @ 25'-0" MAXIMUM CENTER TO CENTER, 9'-0" CENTER TO CENTER FOR TYPE 3 AND 9'-3" CENTER TO CENTER FOR TYPE 4 RETAINING WALLS. FOR WALLS ADJACENT TO SIDEWALKS OR CURBS, PROVIDE 4" PLASTIC PIPE UNDER THE SIDEWALK TO DISCHARGE THRU CURB FACE. EXPOSED WALL DRAINS SHALL BE LOCATED 3"± ABOVE FINISHED GRADE.

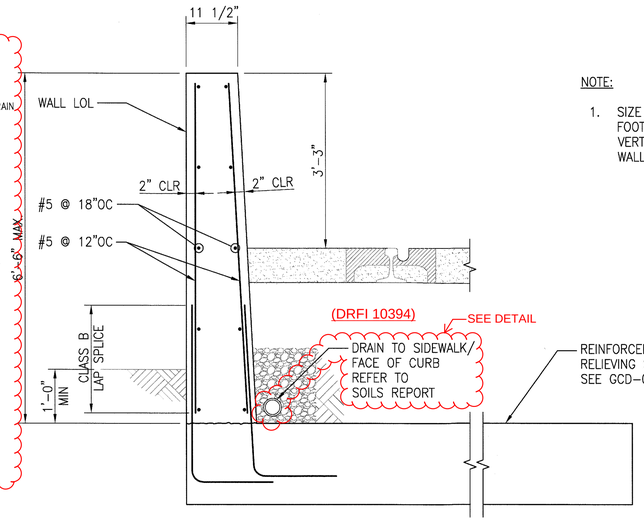

NOTE:

1. SIZE AND SPACING OF FOOTING DOWELS TO MATCH VERTICAL REINFORCEMENT IN WALL U.N.O.

RETAINING WALL SECTION

3/4"=1'-0"

1 / S-S7-215

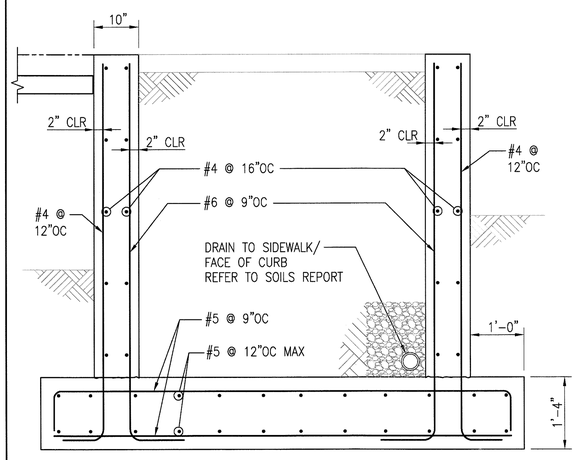

PLANTER WALL SECTION

3/4"=1'-0"

5 / S-S7-215

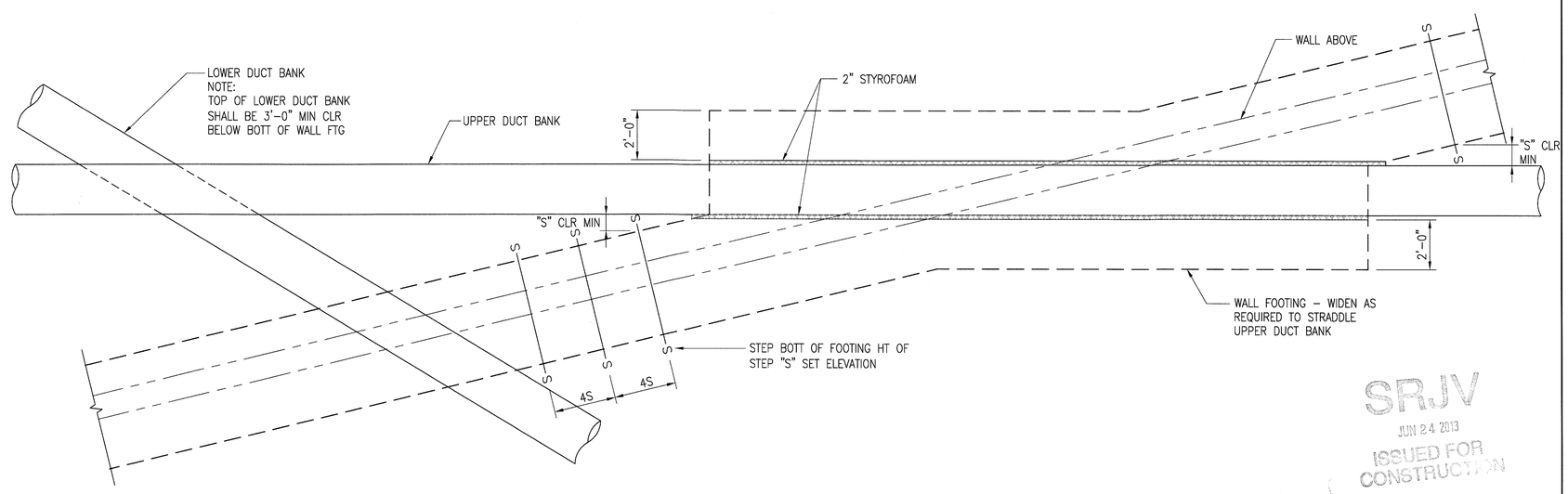

SRJV
JUN 24 2013
ISSUED FOR CONSTRUCTION

ENLARGED PLAN

3/8"=1'-0"

2 / S-S7-215

THE PREPARATION OF THIS DRAWING HAS BEEN FINANCED BY THE TAXES OF THE CITIZENS OF LOS ANGELES COUNTY AND OF THE STATE OF CALIFORNIA.

REV	DATE	BY	APP	REG NO	EXPIRES	SEAL HOLDER	DESCRIPTION
0	5/30/13	FL	KW	2870	9/30/13	KEN WONG	APPROVED FOR CONSTRUCTION

DESIGNED BY D. YOON
DRAWN BY E. RAMIREZ
CHECKED BY D. KATHURIA
IN CHARGE K.WONG
DATE 5/30/13

REGISTERED PROFESSIONAL ENGINEER KENNETH N. WONG No. 2870 Exp 09/30/13 STRUCTURAL STATE OF CALIFORNIA

Exposition Metro Line Construction Authority
Expo
Exposition Construction Authority Approved for Construction Drawings - AFC
JUN 21 2013

EXPO SKANSKA RADOS
444 South Flower Street
Suite 2200
Los Angeles, CA 90071
TEL (213) 443-7463
FAX (213) 362-9481

PARSONS BRINCKERHOFF
miyamoto 700 South Flower Street, Suite 1010 T: (213) 362-7778 Los Angeles, CA 90017 miyamotointernational.com
MI0902064.03

COPENHAGEN

EXPOSITION LRT PROJECT- PHASE 2
COLORADO/4TH STREET STATION
STRUCTURAL
RETAINING WALL SECTIONS AND ENLARGED PLAN

CONTRACT NO XP8902-002
DRAWING NO S-S7-215
REV 0
SCALE AS NOTED
SHEET NO

I:\2009\MI0902064.03 Metro Expo Line Phase 2 Stage B\Drawings\1 Structural\07 Colorado, 4th Street Station\expo2-S-S7-215.dw
30-May-13 2:40 PM Edgar Ramirez

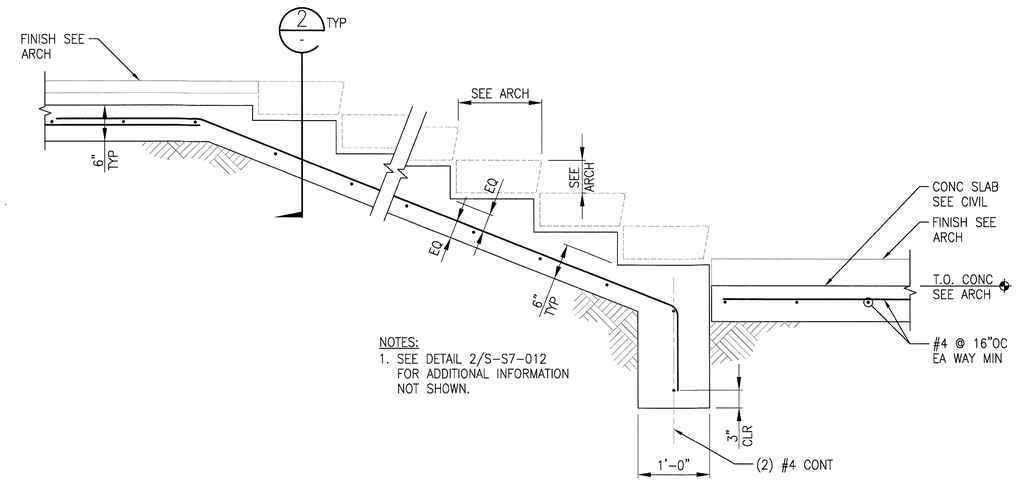

NOTES:
1. SEE DETAIL 2/S-S7-012 FOR ADDITIONAL INFORMATION NOT SHOWN.

STAIR SECTION

1"=1'-0"

1 / S-S7-221

(DRFI 10480)

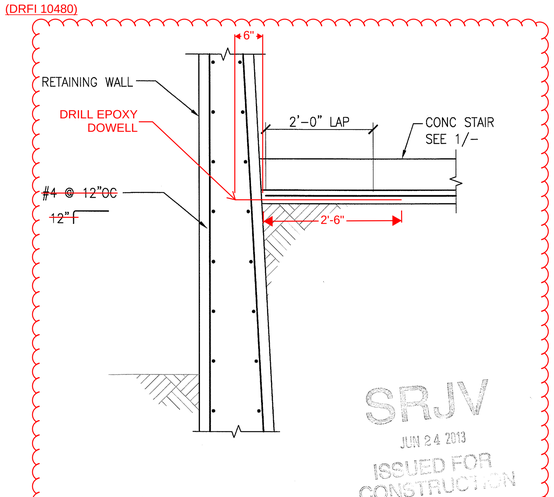

SRJV
JUN 24 2013
ISSUED FOR CONSTRUCTION

STAIR CONNECTION

3/4"=1'-0"

2 / S-S7-221

THE PREPARATION OF THIS DRAWING HAS BEEN FINANCED BY THE TAXES OF THE CITIZENS OF LOS ANGELES COUNTY AND OF THE STATE OF CALIFORNIA.

REV	DATE	BY	APP	REG NO	EXPIRES	SEAL HOLDER	DESCRIPTION
0	5/30/13	FL	KW	2870	9/30/13	KEN WONG	APPROVED FOR CONSTRUCTION

DESIGNED BY D. YOON
DRAWN BY E. RAMIREZ
CHECKED BY D. KATHURIA
IN CHARGE K.WONG
DATE 5/30/13

REGISTERED PROFESSIONAL ENGINEER KENNETH N. WONG No. 2870 Exp 09/30/13 STRUCTURAL STATE OF CALIFORNIA

Exposition Metro Line Construction Authority
Expo
Exposition Construction Authority Approved for Construction Drawings - AFC
JUN 21 2013

EXPO SKANSKA RADOS
444 South Flower Street
Suite 2200
Los Angeles, CA 90071
TEL (213) 443-7463
FAX (213) 362-9481

PARSONS BRINCKERHOFF
miyamoto 700 South Flower Street, Suite 1010 T: (213) 362-7778 Los Angeles, CA 90017 www.miyamotointernational.com
MI0902064.03

EXPOSITION LRT PROJECT- PHASE 2
COLORADO/4TH STREET STATION
STRUCTURAL
STAIR SECTIONS

CONTRACT NO XP8902-002
DRAWING NO S-S7-221
REV 0
SCALE AS NOTED
SHEET NO

I:\2009\MI0902064.03 Metro Expo Line Phase 2 Stage B\Drawings\1 Structural\07 Colorado_4th Street Station\expo2-S-S7-221.dwg
30-May-13 2:40 PM Edgar Ramirez

DRFI 10211

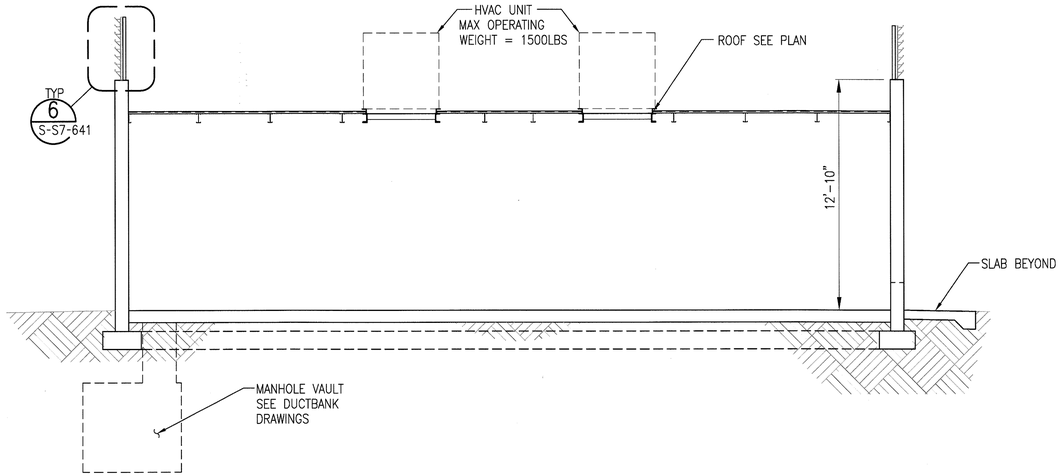

COMMUNICATIONS/SIGNAL BUILDING SECTION

1/4"=1'-0"

3 S-S7-401

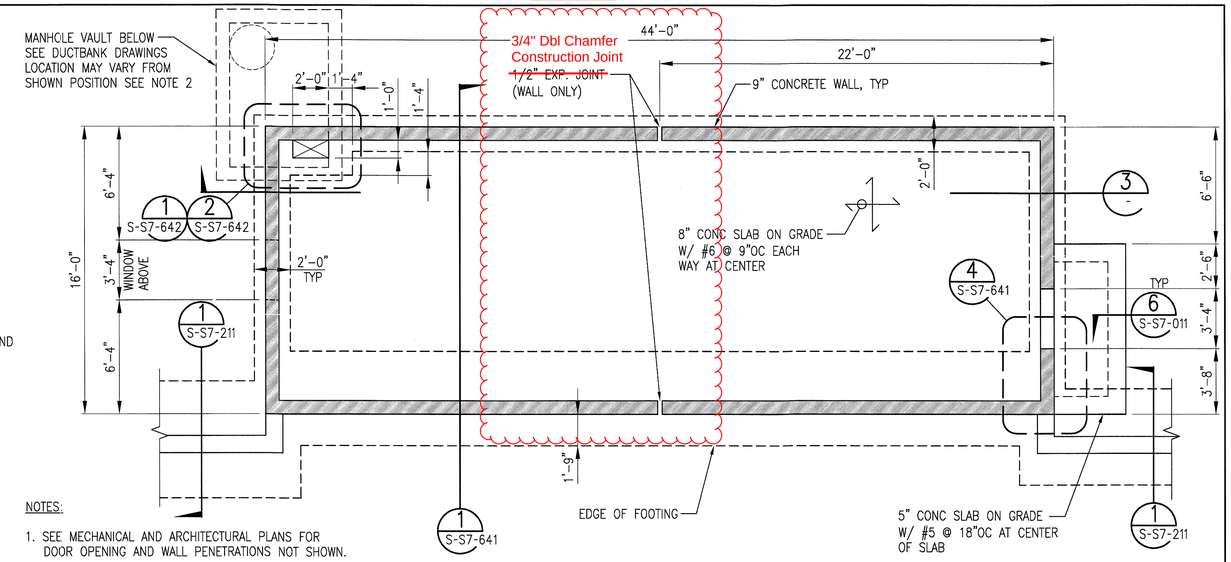

NOTES:

1. SEE MECHANICAL AND ARCHITECTURAL PLANS FOR DOOR OPENING AND WALL PENETRATIONS NOT SHOWN.
2. MANHOLE VAULT SHALL BE DESIGNED FOR SURCHARGE FROM THE BUILDING, THE SOIL BEARING PRESSURE AT THE FOOTING ARE AS FOLLOWS:
   DEAD LOAD : 1200 PSF
   ROOF LIVE LOAD : 40 PSF
   FLOOR LIVE LOAD : 50 PSF

COMMUNICATIONS/SIGNAL BUILDING FOUNDATION PLAN

1/4"=1'-0"

1 S-S7-401

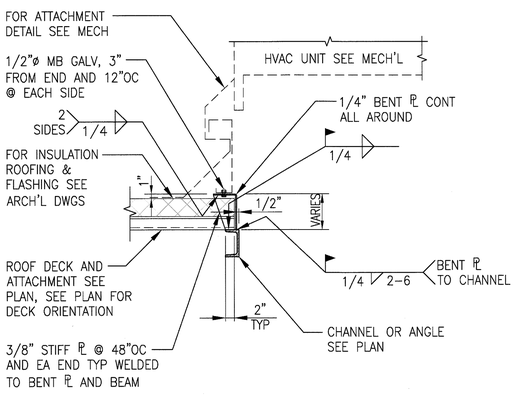

MECHANICAL EQUIPMENT CONNECTION

3/4"=1'-0"

5 S-S7-401

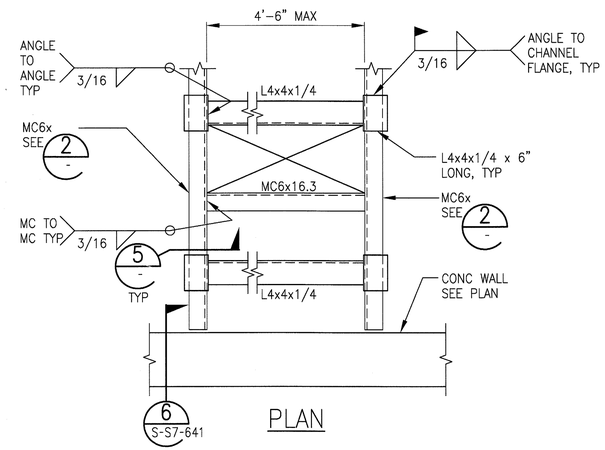

NOTES:

1. ALIGN ANGLES WITH HVAC UNIT CURB. COORDINATE LOCATION WITH MANUFACTURER.

FRAMING AT HVAC UNIT

1"=1'-0"

4 S-S6-401

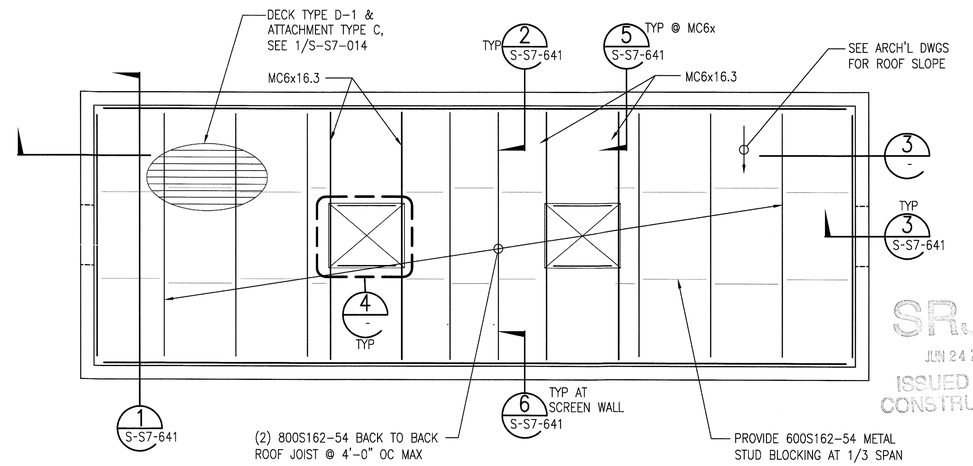

SRJV
JUN 24 2013
ISSUED FOR CONSTRUCTION

COMMUNICATIONS/SIGNAL BUILDING ROOF FRAMING PLAN

1/4"=1'-0"

2 S-S7-401

THE PREPARATION OF THIS DRAWING HAS BEEN FINANCED BY THE TAXES OF THE CITIZENS OF LOS ANGELES COUNTY AND OF THE STATE OF CALIFORNIA.

REV	DATE	BY	APP	REG NO	EXPIRES	SEAL HOLDER	DESCRIPTION
0	5/30/13	FL	KW	2870	9/30/13	KEN WONG	APPROVED FOR CONSTRUCTION

DESIGNED BY D. YOON
DRAWN BY E. RAMIREZ
CHECKED BY D. KATHURIA
IN CHARGE K.WONG
DATE 5/30/13

REGISTERED PROFESSIONAL ENGINEER KENNETH N. WONG No. 2870 Exp 09/30/13 STRUCTURAL STATE OF CALIFORNIA

Exposition Metro Line Construction Authority
Expo
Exposition Construction Authority
Approved for Construction
Drawings - AFC
JUN 21 2013

EXPO SKANSKA RADOS
444 South Flower Street
Suite 2200
Los Angeles, CA 90071
TEL (213) 443-7463
FAX (213) 362-9481

PARSONS BRINCKERHOFF
miyamoto
MI0902084.03
333 South Flower Street, Suite 1040 T: (213) 362-7778
Los Angeles, CA 90071 F: (213) 362-7779 miyamotointernational.com

EXPOSITION LRT PROJECT- PHASE 2
COLORADO/4TH STREET STATION
STRUCTURAL
COMMUNICATIONS/SIGNAL BUILDING
PLAN AND SECTIONS

CONTRACT NO XP8902-002
DRAWING NO S-S7-401
REV 0
SCALE AS NOTED
SHEET NO

I:\2009\MI0902084.03 Metro Expo Line Phase 2 Stage B\Drawings\1 Structural\07 Colorado 4th Street Station\expo2-S-S7-401.dwg
30-May-13 2:40 PM Edgar Ramirez

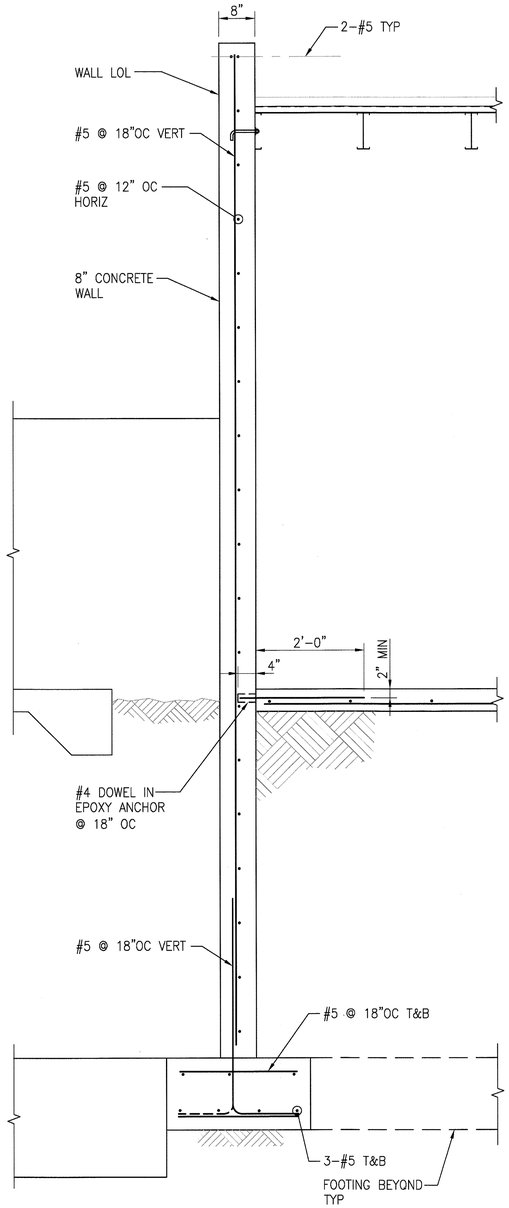

TOS BOOTH SECTION - WALL "BB"

1/4"=1'-0"

4 S-S7-411

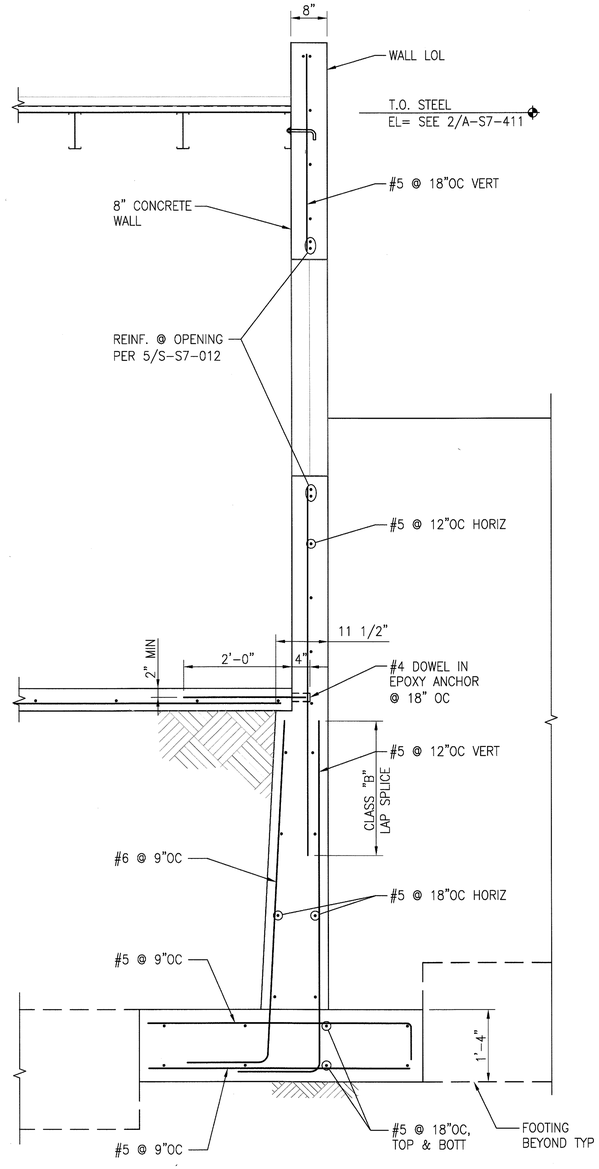

TOS BOOTH SECTION - WALL "AA"

1/4"=1'-0"

3 S-S7-411

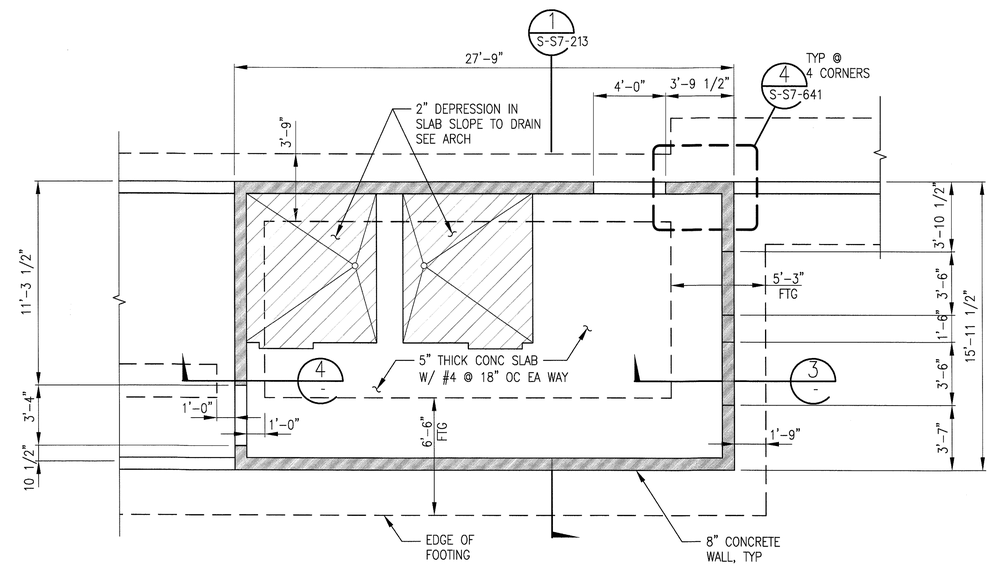

TOS BOOTH FOUNDATION PLAN

1/4"=1'-0"

1 S-S7-411

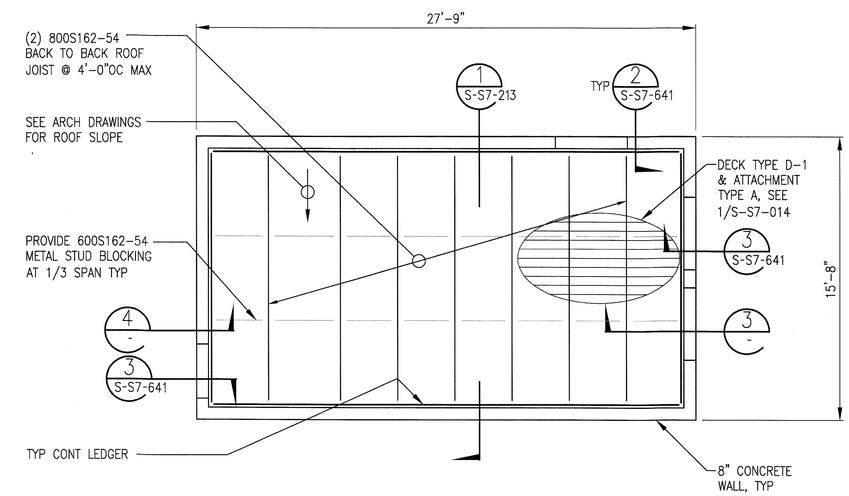

TOS BOOTH ROOF FRAMING PLAN

1/4"=1'-0"

2 S-S7-411

SRJV
JUN 24 2013
ISSUED FOR CONSTRUCTION

THE PREPARATION OF THIS DRAWING HAS BEEN FINANCED BY THE TAXES OF THE CITIZENS OF LOS ANGELES COUNTY AND OF THE STATE OF CALIFORNIA.

REV	DATE	BY	APP	REG NO	EXPIRES	SEAL HOLDER	DESCRIPTION
0	5/30/13	FL	KW	2870	9/30/13	KEN WONG	APPROVED FOR CONSTRUCTION

DESIGNED BY D. YOON
DRAWN BY E. RAMIREZ
CHECKED BY D. KATHURIA
IN CHARGE K.WONG
DATE 5/30/13

REGISTERED PROFESSIONAL ENGINEER KENNETH N. IKUNG No. 2870 Exp 09/30/13 STRUCTURAL STATE OF CALIFORNIA

Exposition Metro Line Construction Authority
Expo
Exposition Construction Authority Approved for Construction Drawings - AFC
JUN 21 2013

EXPO SKANSKA RADOS
444 South Flower Street
Suite 2200
Los Angeles, CA 90071
TEL (213) 443-7463
FAX (213) 362-9481

PARSONS BRINCKERHOFF
miyamoto 700 South Flower Street, Suite 1040 T: (213) 362-7778 Los Angeles, CA 90017 www.miyamotointernational.com
MI09020864.03

EXPOSITION LRT PROJECT- PHASE 2
COLORADO/4TH STREET STATION
STRUCTURAL
ENLARGED TOS BOOTH
PLAN, SECTIONS AND ELEVATIONS

CONTRACT NO XP8902-002
DRAWING NO S-S7-411
REV 0
SCALE AS NOTED
SHEET NO

CORRECTED AT CONSTRUCTION

I:\2009\MI09020864.03 Metro Expo Line Phase 2 Stage B\Drawings\1 Structural\07 Colorado_4th Street Station\expo2-S-S7-411.dwg
30-May-13 2:40 PM Edgar Ramirez

NOTES:

1. SEE DETAIL 1/– FOR ADDITIONAL INFORMATION.

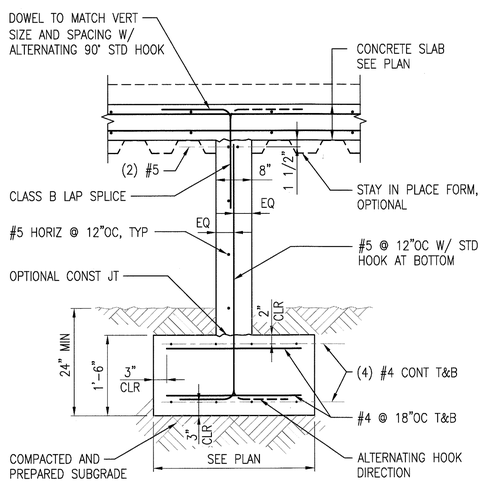

PLATFORM WALL SECTION 3 S-S7-601

3/4"=1'-0"

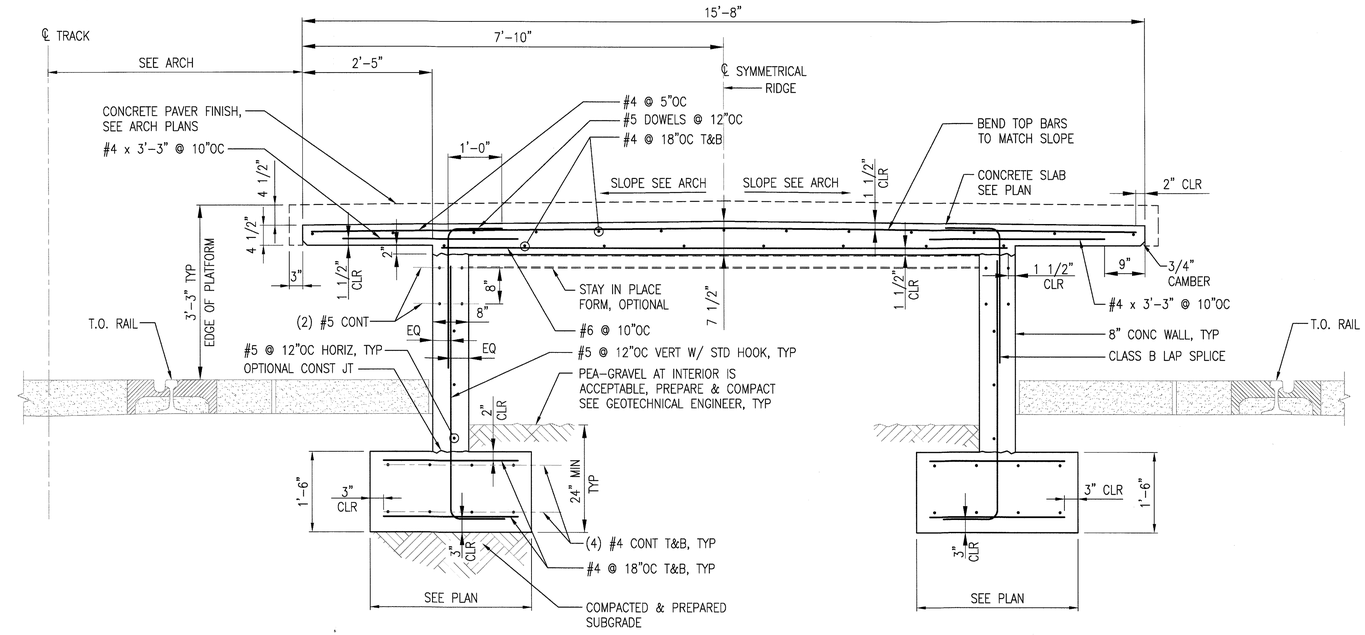

PLATFORM SECTION 1 S-S7-601

3/4"=1'-0"

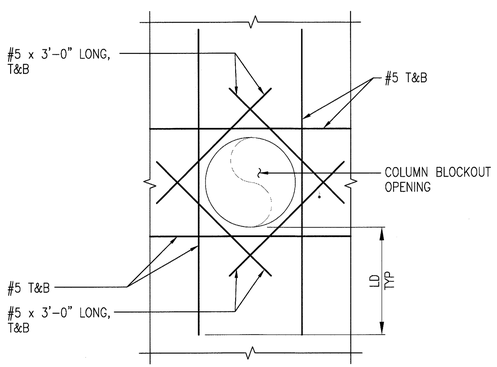

SLAB PLAN B–B

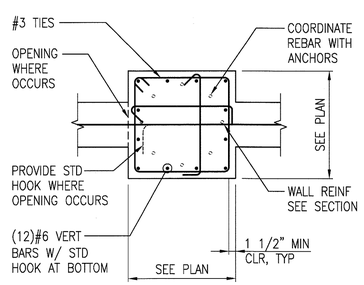

SECTION A–A

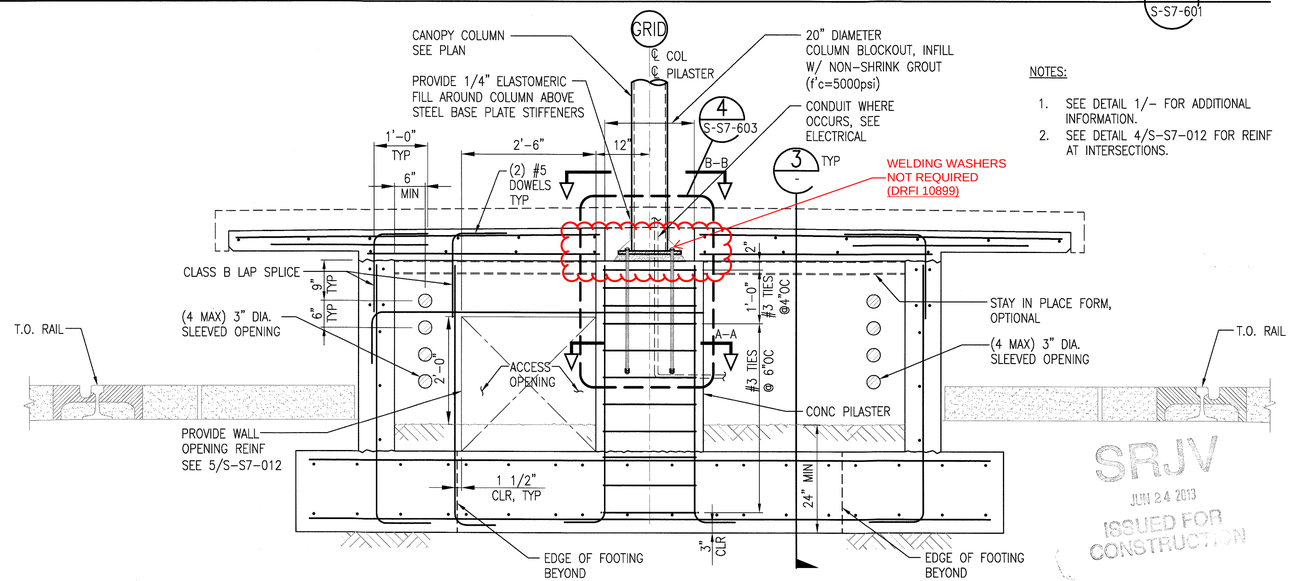

NOTES:

1. SEE DETAIL 1/– FOR ADDITIONAL INFORMATION.
2. SEE DETAIL 4/S–S7–012 FOR REINF AT INTERSECTIONS.

SRJV
JUN 24 2013
ISSUED FOR CONSTRUCTION

PLATFORM SECTION AT CANOPY COLUMN 2 S-S7-601

3/4"=1'-0"

THE PREPARATION OF THIS DRAWING HAS BEEN FINANCED BY THE TAXES OF THE CITIZENS OF LOS ANGELES COUNTY AND OF THE STATE OF CALIFORNIA.

REV	DATE	BY	APP	REG NO	EXPIRES	SEAL HOLDER	DESCRIPTION
0	5/30/13	FL	KW	2870	9/30/13	KEN WONG	APPROVED FOR CONSTRUCTION

DESIGNED BY D. YOON
DRAWN BY E. RAMIREZ
CHECKED BY D. KATHURIA
IN CHARGE K.WONG
DATE 5/30/13

REGISTERED PROFESSIONAL ENGINEER KENNETH N. WONG No. 2870 STRUCTURAL STATE OF CALIFORNIA 09/30/13

Exposition Metro Line Construction Authority
Expo
Exposition Construction Authority Approved for Construction Drawings - AFC
JUN 21 2013
EXPO SKANSKA RADOS
444 South Flower Street Suite 2200 Los Angeles, CA 90071 TEL (213) 443-7463 FAX (213) 362-9481
PARSONS BRINCKERHOFF
miyamoto 700 South Flower Street, Suite 1010 Los Angeles CA 90017 T: (213) 362-7778 www.miyamotointernational.com
M09020054.03
CONFORMATIONAL

EXPOSITION LRT PROJECT- PHASE 2
COLORADO/4TH STREET STATION
STRUCTURAL
PLATFORM DETAILS

CONTRACT NO XP8902-002
DRAWING NO S-S7-601
REV 0
SCALE AS NOTED
SHEET NO

I:\2009\M09020054.03 Metro Expo Line Phase 2 Stage B\Drawings\1 Structural\07 Colorado 4th Street Station\expo2-S-S7-601.cw
30-May-13 2:41 PM Edgar Ramirez

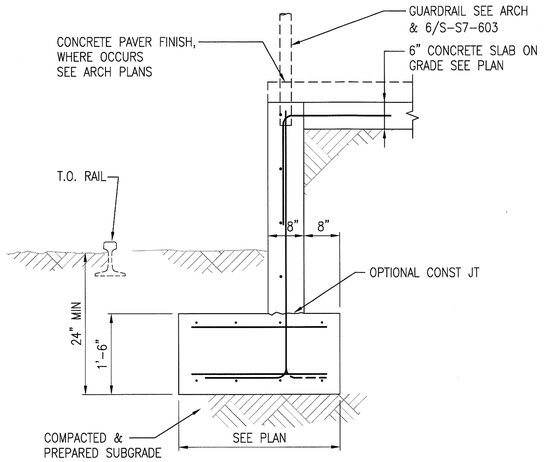

NOTES:

1. SEE DETAIL 3/S-S7-601 FOR ADDITIONAL INFORMATION.

PLATFORM WALL SECTION

4 / S-S7-602

3/4"=1'-0"

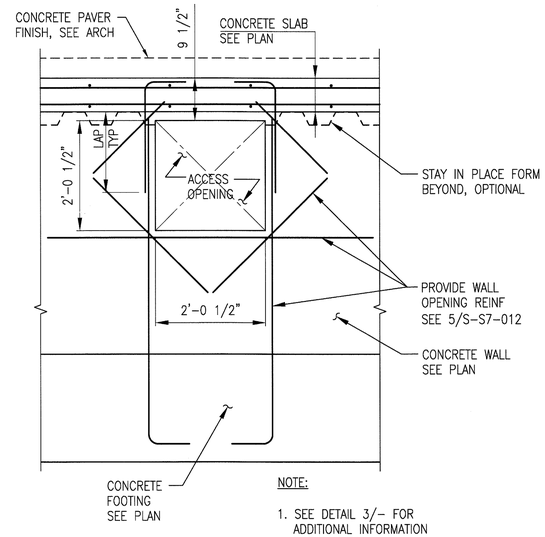

NOTE:

1. SEE DETAIL 3/– FOR ADDITIONAL INFORMATION NOT SHOWN.

PLATFORM EXTERIOR ACCESS OPENING

2 / S-S7-602

1"=1'-0"

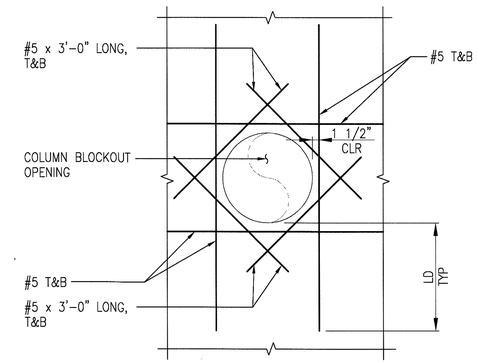

SLAB PLAN B–B

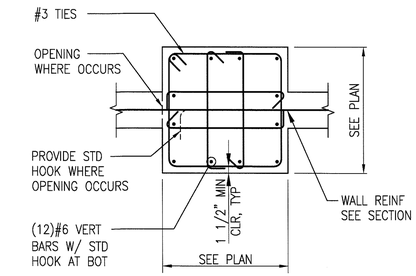

SECTION A–A

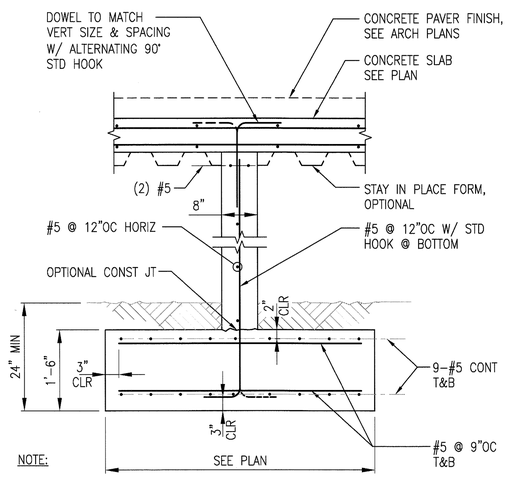

NOTE:

1. SEE DETAIL 3/S-S7-601 FOR ADDITIONAL INFORMATION.

PLATFORM WALL SECTION @ OCS

3 / S-S7-602

3/4"=1'-0"

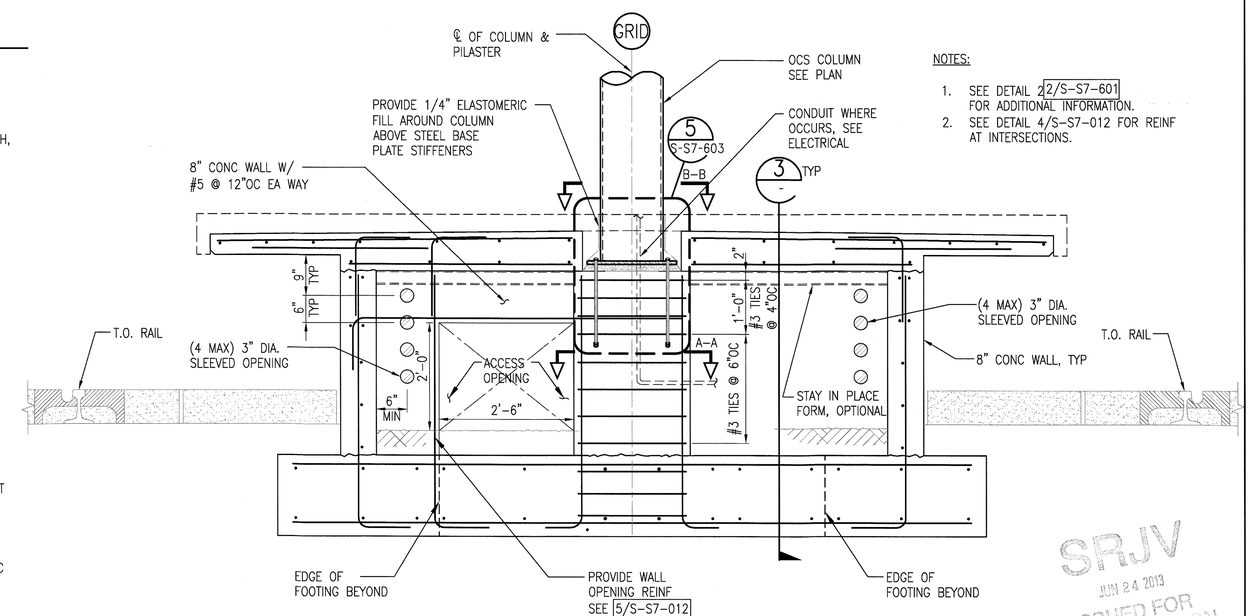

NOTES:

1. SEE DETAIL 2/S-S7-601 FOR ADDITIONAL INFORMATION.
2. SEE DETAIL 4/S-S7-012 FOR REINF AT INTERSECTIONS.

SRJV
JUN 24 2013
ISSUED FOR CONSTRUCTION

PLATFORM SECTION AT OCS COLUMN

1 / S-S7-602

3/4"=1'-0"

THE PREPARATION OF THIS DRAWING HAS BEEN FINANCED BY THE TAXES OF THE CITIZENS OF LOS ANGELES COUNTY AND OF THE STATE OF CALIFORNIA.

REV	DATE	BY	APP	REG NO	EXPIRES	SEAL HOLDER	DESCRIPTION
0	5/30/13	FL	KW	2870	9/30/13	KEN WONG	APPROVED FOR CONSTRUCTION

DESIGNED BY D. YOON
DRAWN BY E. RAMIREZ
CHECKED BY D. KATHURIA
IN CHARGE K.WONG
DATE 5/30/13

REGISTERED PROFESSIONAL ENGINEER KENNETH N. WONG No. 2870 Exp. 09/30/13 STRUCTURAL STATE OF CALIFORNIA

Exposition Metro Line Construction Authority
Expo
Exposition Construction Authority
Approved for Construction
Drawings - AFC
JUN 21 2013

EXPO SKANSKA RADOS

444 South Flower Street
Suite 2200
Los Angeles, CA 90071
TEL (213) 443-7463
FAX (213) 362-9481

PARSONS BRINCKERHOFF

miyamoto
333 South Hope Street, Suite 1020 T: (213) 362-7778
Los Angeles, CA 90017 miyamotointernational.com
MI09002064.03

EXPO LRT PROJECT- PHASE 2
COLORADO/4TH STREET STATION
STRUCTURAL
PLATFORM DETAILS

CONTRACT NO XP8902-002
DRAWING NO S-S7-602
REV 0
SCALE AS NOTED
SHEET NO

I:\2009\MI09002064.03 Metro Expo Line Phase 2 Stage B\Drawings\1 Structural\07 Colorado_4th Street Station\expo2-S-S7-602.dw
30-May-13 2:41 PM Edgar Ramirez

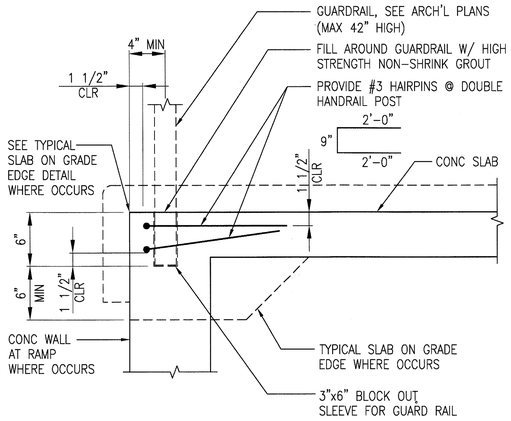

HANDRAIL/GUARDRAIL SLEEVE AT WALKWAY (6 / S-S7-603)

3/4"=1'-0"

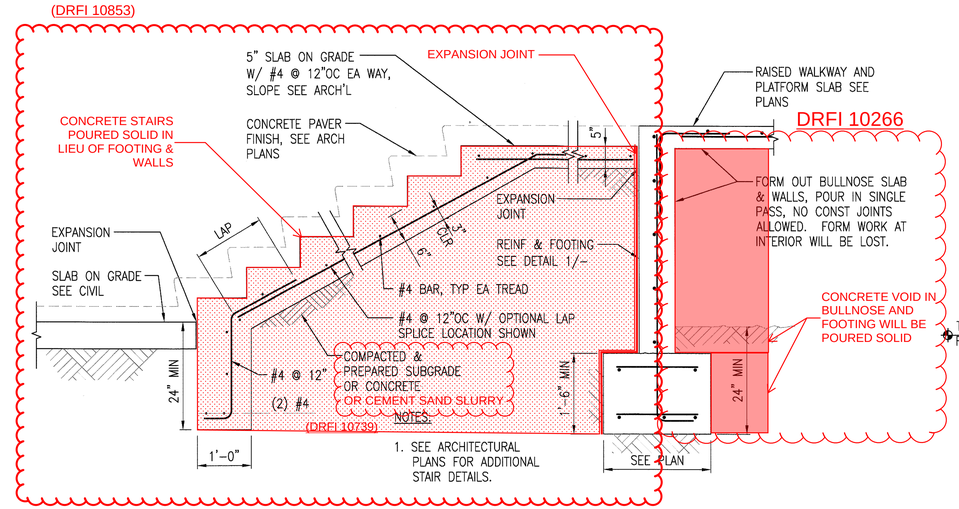

STAIR SECTION (3 / S-S7-603)

3/4"=1'-0"

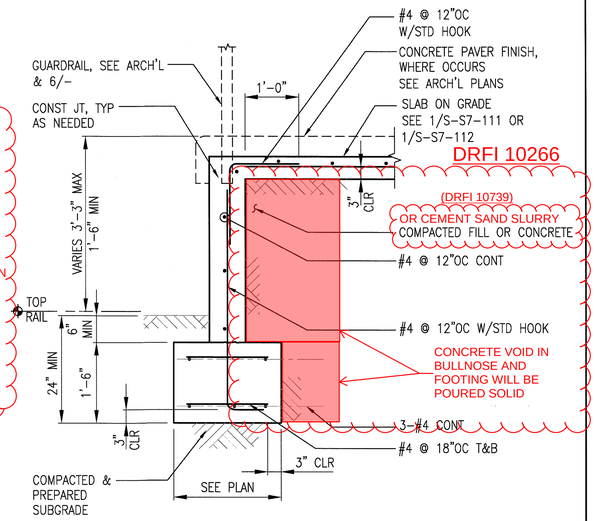

RAISED WALKWAY SECTION (1 / S-S7-603)

3/4"=1'-0"

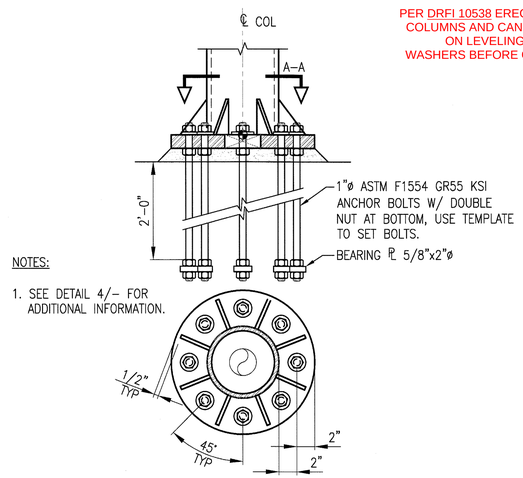

SECTION A-A

OCS COLUMN BASE (5 / S-S7-603)

1 1/2"=1'-0"

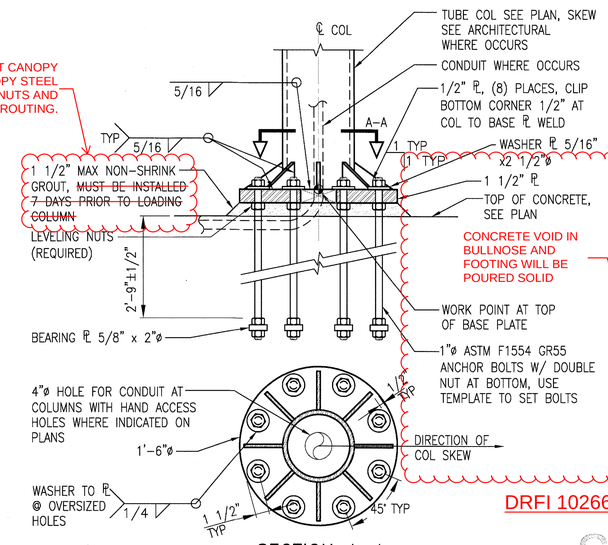

SECTION A-A

CANOPY COLUMN BASE (4 / S-S7-603)

1 1/2"=1'-0"

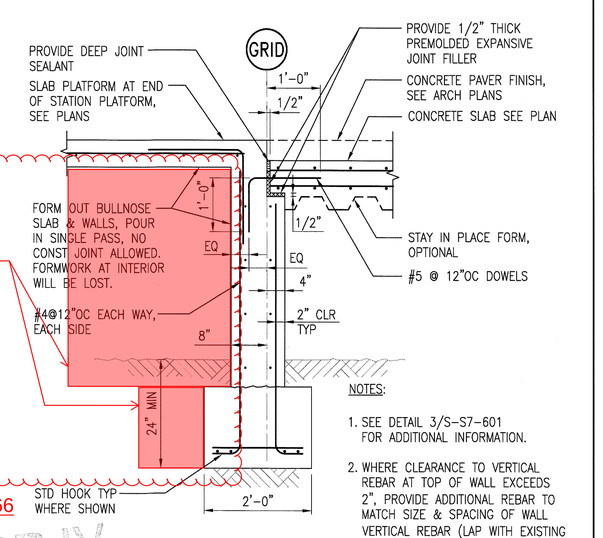

PLATFORM SECTION (2 / S-S7-603)

3/4"=1'-0"

SRJV
JUN 24 2013
ISSUED FOR CONSTRUCTION

THE PREPARATION OF THIS DRAWING HAS BEEN FINANCED BY THE TAXES OF THE CITIZENS OF LOS ANGELES COUNTY AND OF THE STATE OF CALIFORNIA.

REV	DATE	BY	APP	REG NO	EXPIRES	SEAL HOLDER	DESCRIPTION
0	5/30/13	FL	KW	2870	9/30/13	KEN WONG	APPROVED FOR CONSTRUCTION

DESIGNED BY D. YOON
DRAWN BY E. RAMIREZ
CHECKED BY D. KATHURIA
IN CHARGE K.WONG
DATE 5/30/13

REGISTERED PROFESSIONAL ENGINEER KENNETH N. WONG No. 2870 Exp 09/30/13 STRUCTURAL STATE OF CALIFORNIA

Exposition Metro Line Construction Authority
Expo
Exposition Construction Authority Approved for Construction Drawings - AFC
JUN 21 2013

EXPO SKANSKA RADOS
444 South Flower Street Suite 2200 Los Angeles, CA 90071 TEL (213) 443-7463 FAX (213) 362-9481

PARSONS BRINCKERHOFF
miyamoto 700 South Flower Street, Suite 1010 Los Angeles, CA 90017 T: (213) 362-7778 www.miyamotointernational.com
M09092064.03

EXPOSITION LRT PROJECT- PHASE 2
COLORADO/4TH STATION
STRUCTURAL
PLATFORM DETAILS

CONTRACT NO XP8902-002
DRAWING NO S-S7-603
REV 0
SCALE AS NOTED
SHEET NO

COPYRIGHT © 2013

I:\2009\M09092064 03 Metro Expo Line Phase 2 Stage B\Drawings\1 Structural\07 Colorado 4th Street Station\exp02-S-S7-603.dw
Edgar Ramirez 2:41 PM 30-May-13

NOTES:

1. SEE DETAIL 1/S-S7-602 FOR ADDITIONAL INFORMATION.
2. SEE DETAIL 4/S-S7-012 FOR REINF AT INTERSECTIONS.

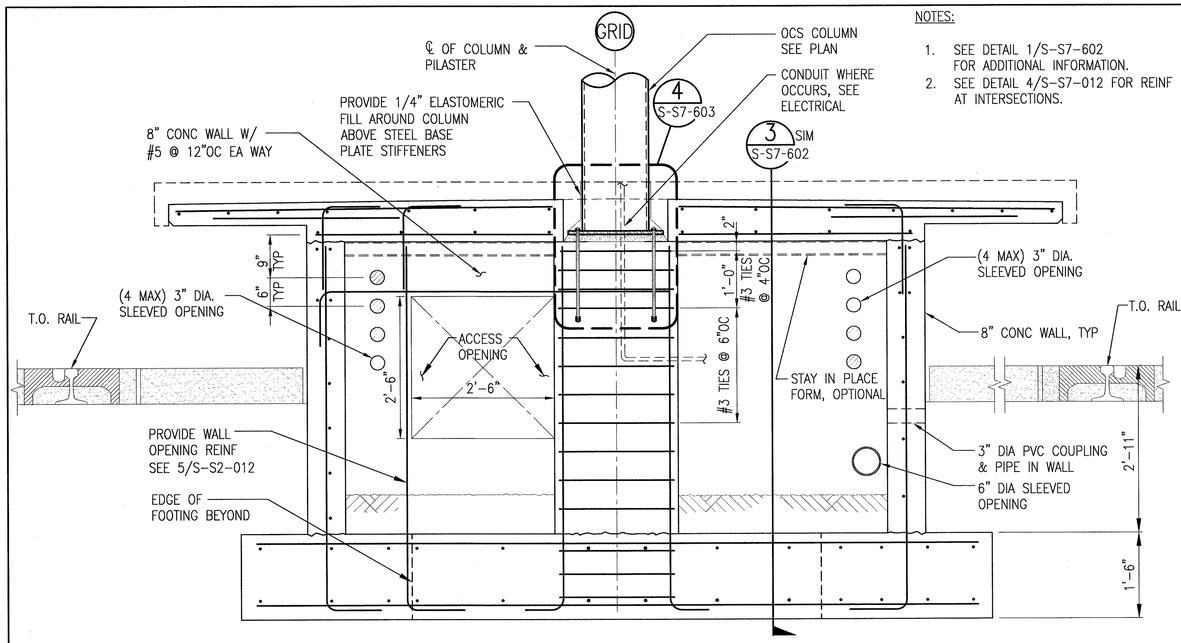

PLATFORM SECTION AT OCS COLUMN

3/4"=1'-0"

3 S-S7-604

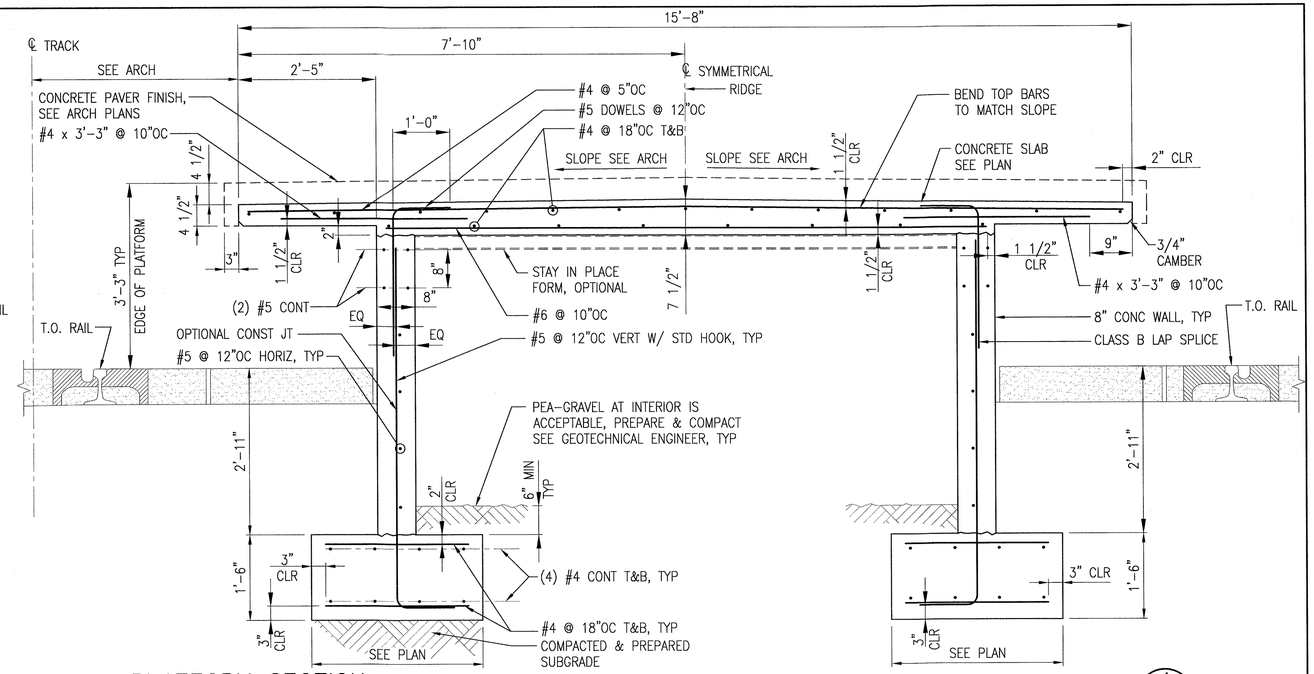

PLATFORM SECTION

3/4"=1'-0"

1 S-S7-604

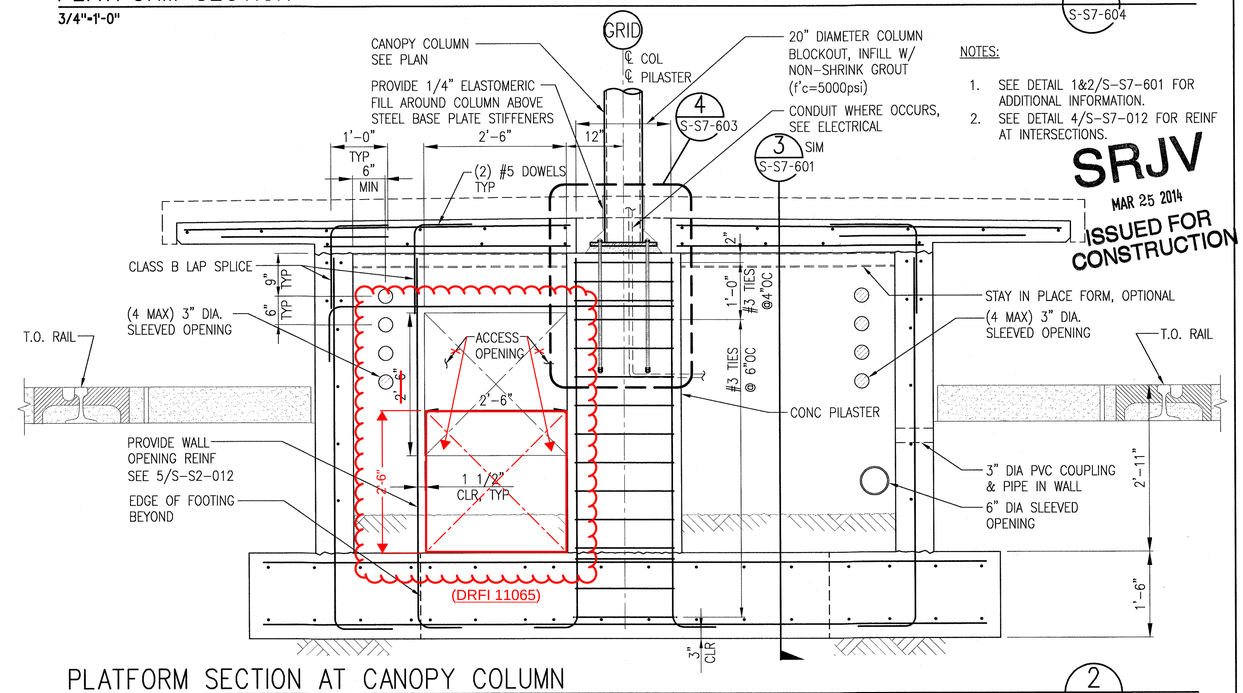

NOTES:

1. SEE DETAIL 1&2/S-S7-601 FOR ADDITIONAL INFORMATION.
2. SEE DETAIL 4/S-S7-012 FOR REINF AT INTERSECTIONS.

SRJV
MAR 25 2014
ISSUED FOR CONSTRUCTION

PLATFORM SECTION AT CANOPY COLUMN

3/4"=1'-0"

2 S-S7-604

Exposition Construction Authority
Approved for Construction
Drawings - AFC
MAR 20 2014

THE PREPARATION OF THIS DRAWING HAS BEEN FINANCED BY THE TAXES OF THE CITIZENS OF LOS ANGELES COUNTY AND OF THE STATE OF CALIFORNIA.

REV	DATE	BY	APP	REG NO	EXPIRES	SEAL HOLDER	DESCRIPTION
0	02/18/14	FL	KW	2870	9/30/15	KEN WONG	ECI 43

DESIGNED BY D. YOON
DRAWN BY E. RAMIREZ
CHECKED BY D. KATHURIA
IN CHARGE K.WONG
DATE 02/18/14

REGISTERED PROFESSIONAL ENGINEER KENNETH N. WONG No. 2870 Exp. 09/30/15 STRUCTURAL STATE OF CALIFORNIA

Exposition Metro Line Construction Authority
Expo

EXPO SKANSKA RADOS

444 South Flower Street
Suite 2200
Los Angeles, CA 90071
TEL (213) 443-7463
FAX (213) 362-9481

PARSONS BRINCKERHOFF

miyamoto. 700 South Flower Street, Suite 1010 Los Angeles, CA 90017 T: (213) 362-7778 miyamotointernational.com
MI0902064.05

CURRENT STATUS

EXPOSITION LRT PROJECT- PHASE 2
COLORADO/4TH STREET STATION
STRUCTURAL
PLATFORM DETAILS

CONTRACT NO XP8902-002
DRAWING NO S-S7-604
REV 0
SCALE AS NOTED
SHEET NO

I:\2009\MI0902064.05 Metro Expo Line Phase 2 Stage B-4th\Colorado Stn Add Canopies\Drawings\expo2-S-S7-604 ECI43.dwg
18-Feb-14
11:06 AM
Eric Ramos

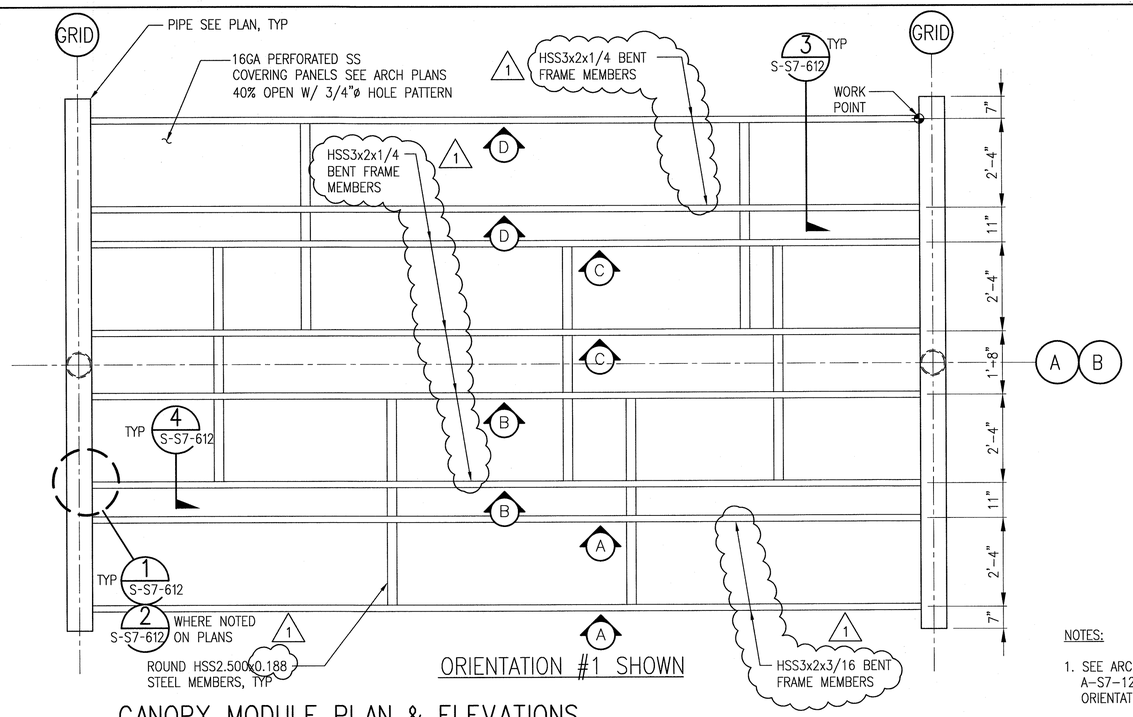

ORIENTATION #1 SHOWN

CANOPY MODULE PLAN & ELEVATIONS

1/2"=1'-0"

NOTES:

1. SEE ARCH DRAWINGS A-S7-122 FOR OTHER ORIENTATIONS.

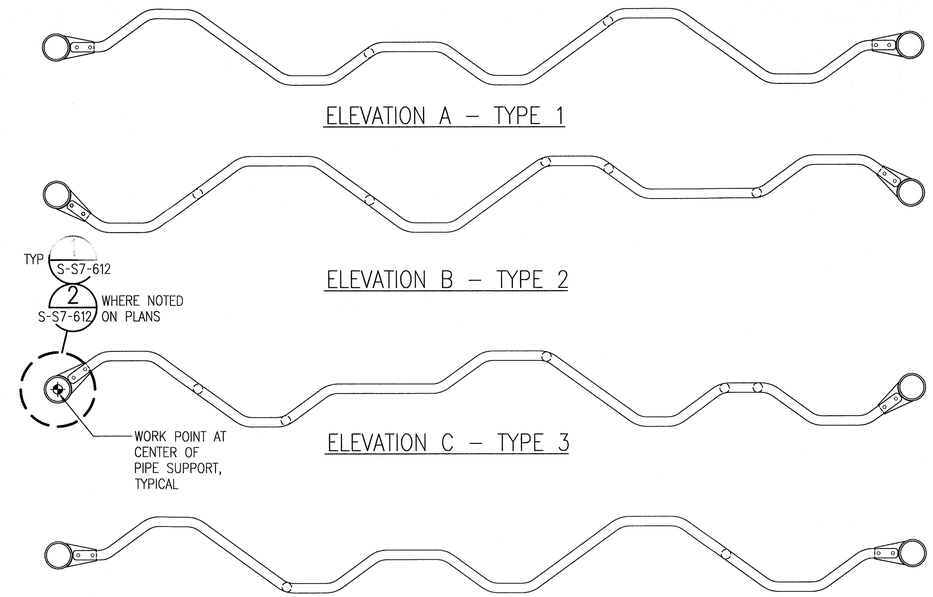

NOTES:

1. SEE ARCH PLANS FOR DIMENSIONS AND INFO NOT SHOWN.

1 S-S7-611

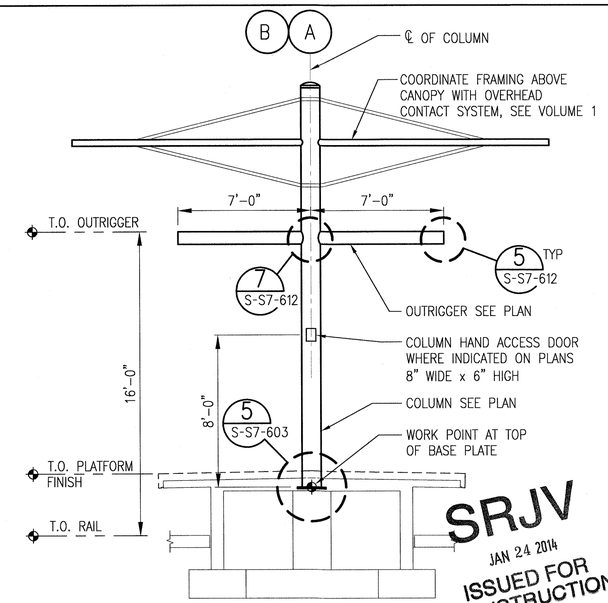

SRJV
JAN 24 2014
ISSUED FOR CONSTRUCTION

OCS COLUMN

1/4"=1'-0"

3 S-S7-611

Exposition Construction Authority
Approved for Construction
Drawings - AFC
JAN 23 2014

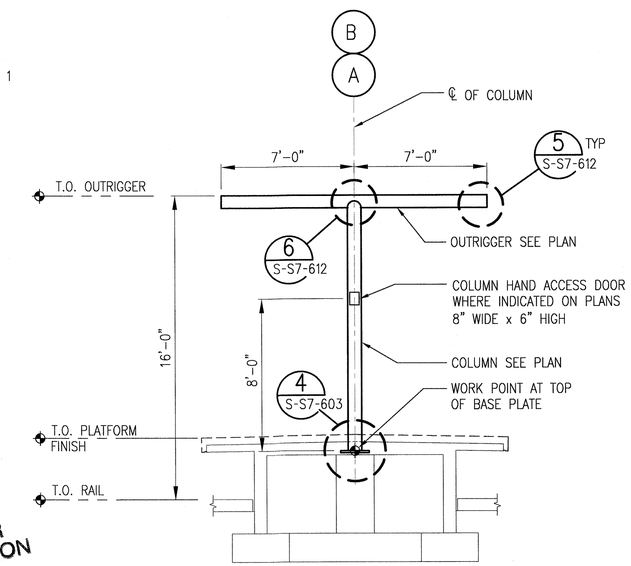

CANOPY COLUMN

1/4"=1'-0"

2 S-S7-611

REV	DATE	BY	APP	REG NO	EXPIRES	SEAL HOLDER	DESCRIPTION
1	7/30/13	FL	KW	2870	9/30/13	KEN WONG	ECI 17
0	5/30/13	FL	KW	2870	9/30/13	KEN WONG	APPROVED FOR CONSTRUCTION

THE PREPARATION OF THIS DRAWING HAS BEEN FINANCED BY THE TAXES OF THE CITIZENS OF LOS ANGELES COUNTY AND OF THE STATE OF CALIFORNIA.

DESIGNED BY: D. YOON
DRAWN BY: E. RAMIREZ
CHECKED BY: D. KATHURIA
IN CHARGE: K.WONG
DATE: 5/30/13

REGISTERED PROFESSIONAL ENGINEER KENNETH N. WONG No. 2870 Exp 09/30/13 STRUCTURAL STATE OF CALIFORNIA

Exposition Metro Line Construction Authority
Expo

EXPO SKANSKA RADOS

444 South Flower Street
Suite 2200
Los Angeles, CA 90071
TEL (213) 443-7463
FAX (213) 362-9481

PARSONS BRINCKERHOFF

miyamoto. 700 South Flower Street, Suite 1010 T: (213) 362-7778 Los Angeles, CA 90017 miyamotointernational.com
MI0902064.03

CURRENT STATUS

EXPOSITION LRT PROJECT- PHASE 2
COLORADO/4TH STREET STATION
STRUCTURAL
CANOPY DETAILS

CONTRACT NO: XP8902-002
DRAWING NO: S-S7-611
REV: 0
SCALE: AS NOTED
SHEET NO:

I:\2009\M109\2064.03 Metro Expo Line Phase 2 Stage B\Drawings\1 Structural\07 Colorado_4th Street Station\expo2-S-S7-611.dw
18-Sep-13 3:27 PM Eric Ramos

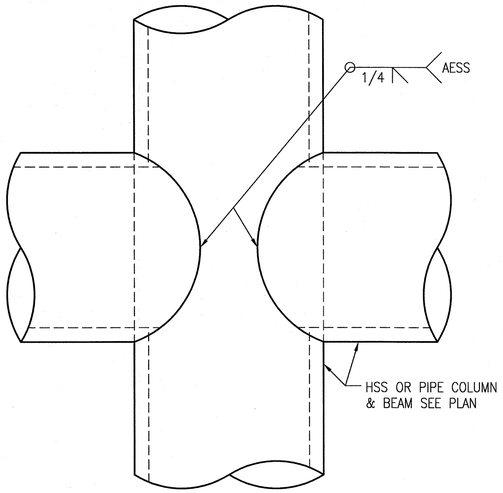

OCS COLUMN CONNECTION 7 S-S7-612
NO SCALE

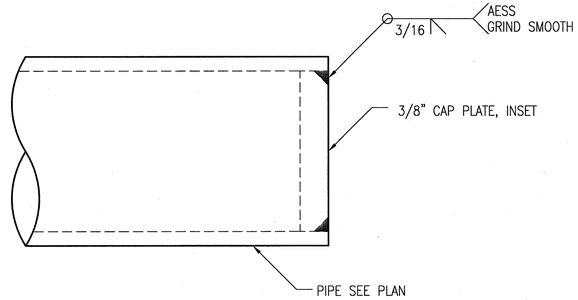

TYP CANOPY END CAP 5 S-S7-612
NO SCALE

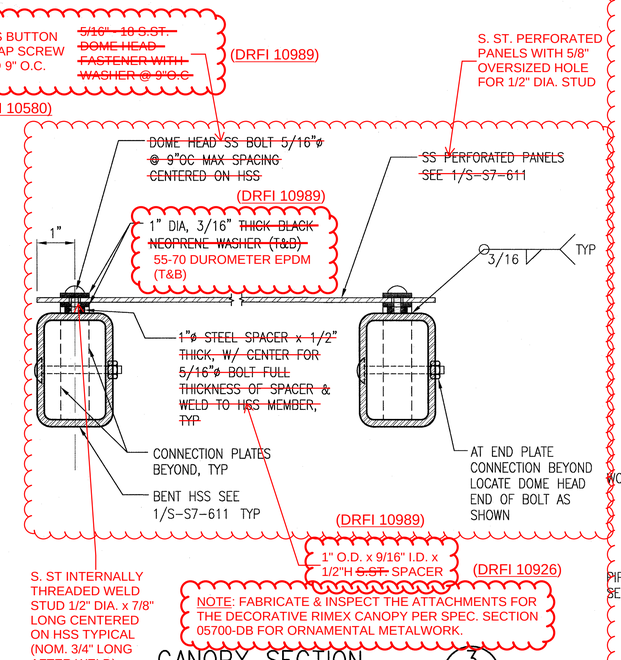

CANOPY SECTION 3 S-S7-612
6"=1'-0"

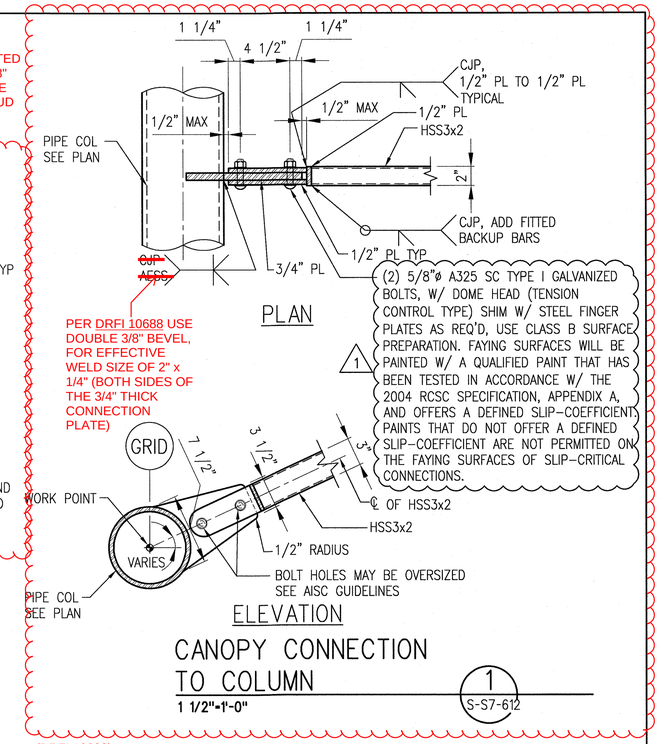

CANOPY CONNECTION TO COLUMN 1 S-S7-612
1 1/2"=1'-0"

(DRFI 10688)

NOTE:
ALL A307 BOLTS TO BE GALVANIZED AND PAINTED. 1

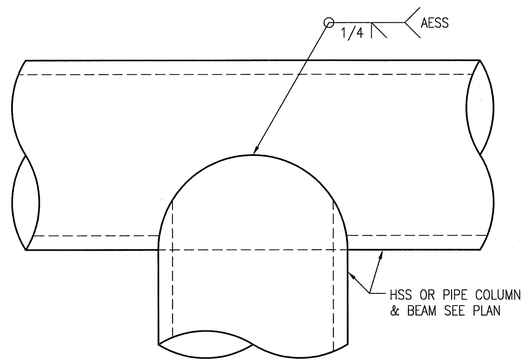

CANOPY COLUMN T CONNECTION 6 S-S7-612
NO SCALE

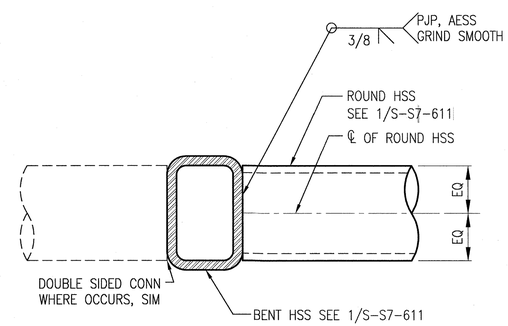

NOTES:

1. USE PREQUALIFIED WELD DETAIL REQUIREMENTS OF AWS D1.1 SECTION 3.12.4.

CANOPY CROSS BEAM 4 S-S7-612
6"=1'-0"

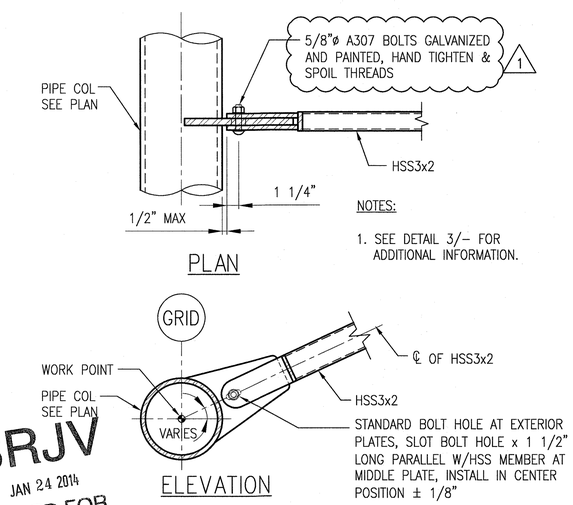

NOTES:

1. SEE DETAIL 3/– FOR ADDITIONAL INFORMATION.

SRJV
JAN 24 2014
ISSUED FOR CONSTRUCTION

Exposition Construction Authority
Approved for Construction
Drawings - AFC
JAN 23 2014

CANOPY CONNECTION TO COLUMN 2 S-S7-612
1 1/2"=1'-0"

THE PREPARATION OF THIS DRAWING HAS BEEN FINANCED BY THE TAXES OF THE CITIZENS OF LOS ANGELES COUNTY AND OF THE STATE OF CALIFORNIA.

REV	DATE	BY	APP	REG NO	EXPIRES	SEAL HOLDER	DESCRIPTION
1	12/19/13	FL	KW	2870	9/30/15	KEN WONG	ECI 70
0	5/30/13	FL	KW	2870	9/30/15	KEN WONG	APPROVED FOR CONSTRUCTION

DESIGNED BY D. YOON
DRAWN BY E. RAMIREZ
CHECKED BY D. KATHURIA
IN CHARGE K.WONG
DATE 12/19/13

REGISTERED PROFESSIONAL ENGINEER KENNETH W. WONG No. 2870 Exp 09/30/15 STRUCTURAL STATE OF CALIFORNIA

Exposition Metro Line Construction Authority
Expo
EXPO SKANSKA RADOS
444 South Flower Street
Suite 2200
Los Angeles, CA 90071
TEL (213) 443-7463
FAX (213) 362-9481
PARSONS BRINCKERHOFF
miyamoto. 700 South Flower Street, Suite 1010 T: (213) 362-7778
Los Angeles, CA 90017 miyamotointernational.com
MI0902064.03
CURRENT STATUS

EXPOSITION LRT PROJECT- PHASE 2
COLORADO/4TH STREET STATION
STRUCTURAL
CANOPY DETAILS

CONTRACT NO XP8902-002
DRAWING NO S-S7-612
REV 1
SCALE AS NOTED
SHEET NO

I:\2009\MI0902064.03 Metro Expo Line Phase 2 Stage B\Drawings\1 Structural\07 Colorado_4th Street Station\expo2-S-S7-612.dwg
19-Dec-13 4:44 PM Edgar Ramirez

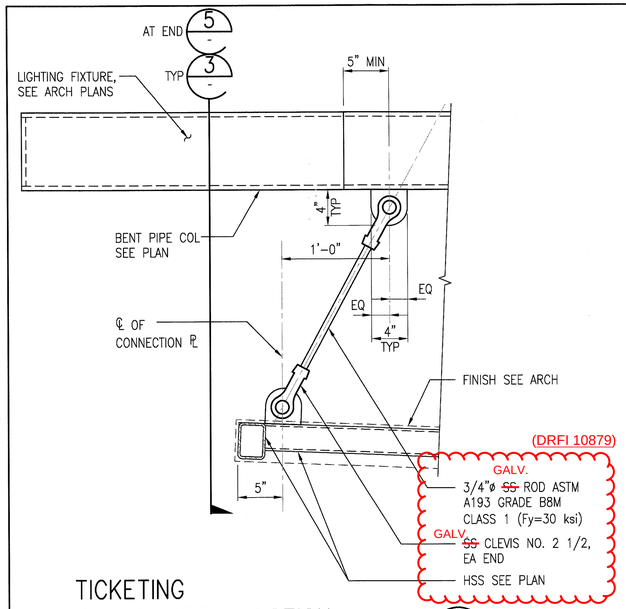

TICKETING
RAIN CANOPY SECTION 7 S-S7-613
1 1/2"=1'-0"

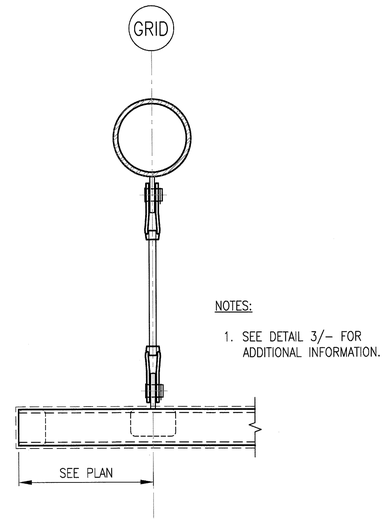

NOTES:

1. SEE DETAIL 3/– FOR ADDITIONAL INFORMATION.

RAIN CANOPY
HANGER AT CANOPY 5 S-S7-613
1 1/2"=1'-0"

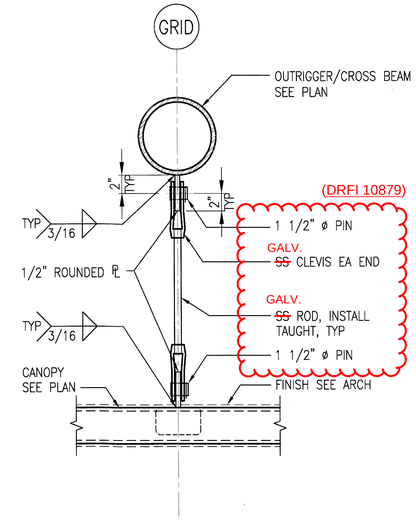

RAIN CANOPY
HANGER AT CANOPY 3 S-S7-613
1 1/2"=1'-0"

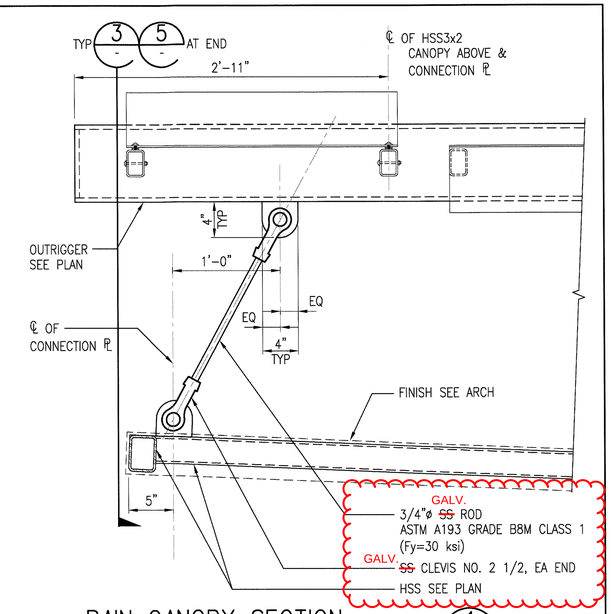

RAIN CANOPY SECTION 1 S-S7-613 (DRFI 10879)
1 1/2"=1'-0"

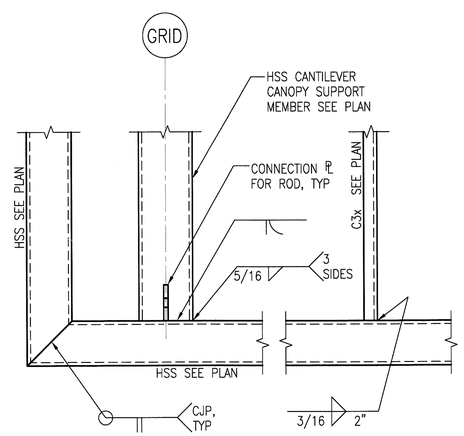

RAIN CANOPY CONNECTION 6 S-S7-613
1 1/2"=1'-0"

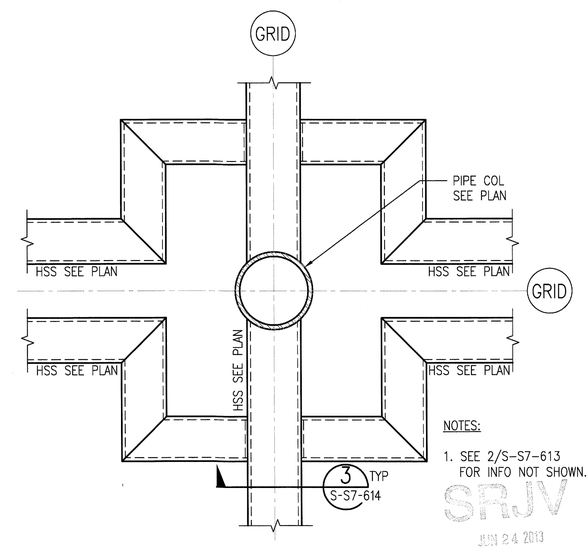

NOTES:

1. SEE 2/S-S7-613 FOR INFO NOT SHOWN.

SRJV
JUN 24 2013
ISSUED FOR CONSTRUCTION

RAIN CANOPY
CONNECTION AT COLUMN 4 S-S7-613
1 1/2"=1'-0"

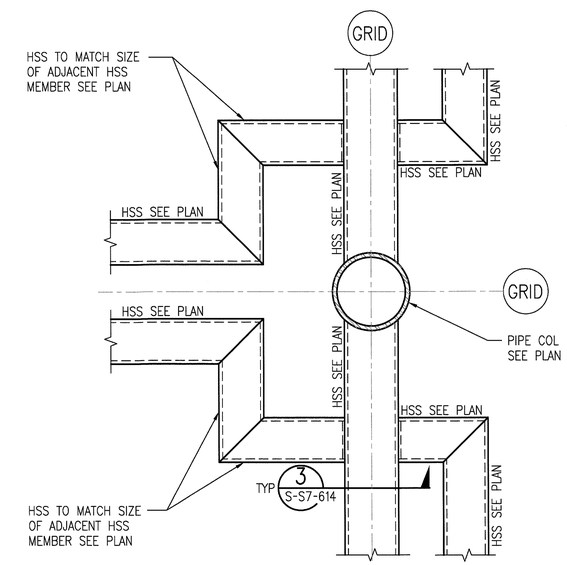

RAIN CANOPY
CONNECTION AT COLUMN 2 S-S7-613
1 1/2"=1'-0"

THE PREPARATION OF THIS DRAWING HAS BEEN FINANCED BY THE TAXES OF THE CITIZENS OF LOS ANGELES COUNTY AND OF THE STATE OF CALIFORNIA.

REV	DATE	BY	APP	REG NO	EXPIRES	SEAL HOLDER	DESCRIPTION
0	5/30/13	FL	KW	2870	9/30/13	KEN WONG	APPROVED FOR CONSTRUCTION

DESIGNED BY D. YOON
DRAWN BY E. RAMIREZ
CHECKED BY D. KATHURIA
IN CHARGE K.WONG
DATE 5/30/13

REGISTERED PROFESSIONAL ENGINEER KENNETH N. WONG No. 2870 Exp. 09/30/13 STRUCTURAL STATE OF CALIFORNIA

Exposition Metro Line Construction Authority
Expo
Exposition Construction Authority Approved for Construction Drawings - AFC
JUN 21 2013

EXPO SKANSKA RADOS
444 South Flower Street
Suite 2200
Los Angeles, CA 90071
TEL (213) 443-7463
FAX (213) 362-9481

PARSONS BRINCKERHOFF
miyamoto 700 South Flower Street, Suite 1010 T: (213) 362-7778 Los Angeles, CA 90017 www.miyamotointernational.com
M10902064.03

EXPOSITION LRT PROJECT- PHASE 2
COLORADO/4TH STREET STATION
STRUCTURAL
RAIN CANOPY DETAILS

CONTRACT NO XP8902-002
DRAWING NO S-S7-613
REV 0
SCALE AS NOTED
SHEET NO

CONFORMED COPY

I:\2009\M09\2064.03 Metro Expo Line Phase 2 Stage B\Drawings\1 Structural\07 Colorado_4th Street Station\expo2-S-S7-613.dw
30-May-13 2:41 PM Edgar Ramirez

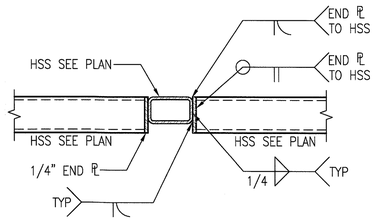

RAIN CANOPY CONNECTION (3 / S-S7-614)
1 1/2"=1'-0"

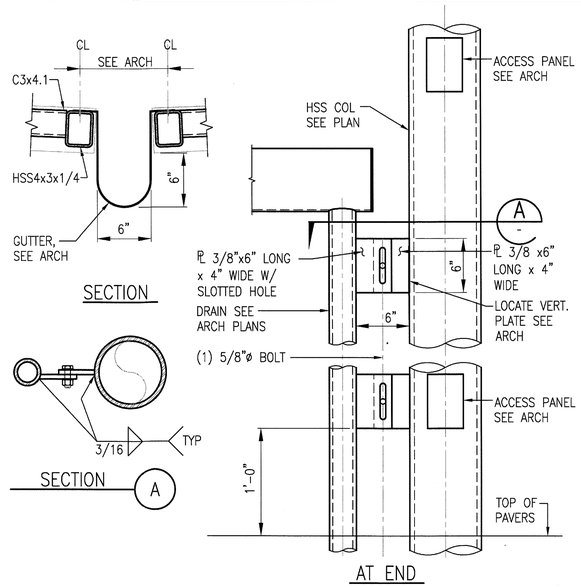

RAIN GUTTER (1 / S-S7-614)
1 1/2"=1'-0"

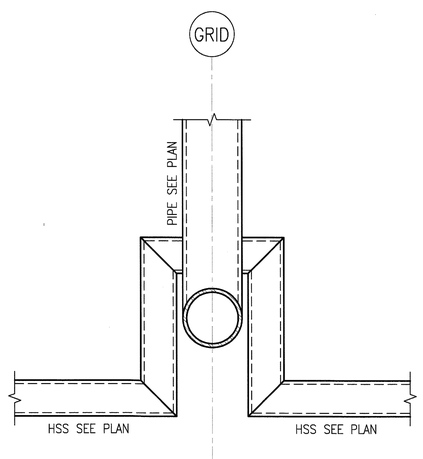

NOTES:

1. SEE 2/S-S7-614
FOR INFO NOT SHOWN.

TICKETING CANOPY
CONNECTION AT COLUMN (4 / S-S7-614)
1 1/2"=1'-0"

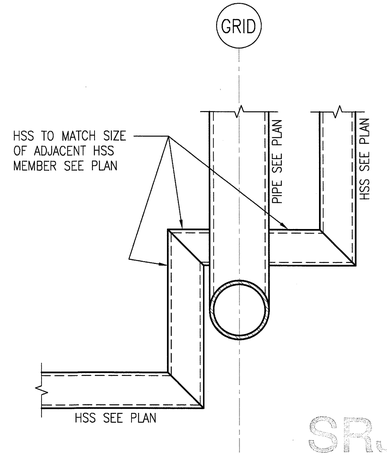

TICKETING CANOPY
CONNECTION AT COLUMN (2 / S-S7-614)
1 1/2"=1'-0"

SRJV
JUN 24 2013
ISSUED FOR
CONSTRUCTION

THE PREPARATION OF THIS DRAWING HAS BEEN FINANCED BY THE TAXES OF THE CITIZENS OF LOS ANGELES COUNTY AND OF THE STATE OF CALIFORNIA.

REV	DATE	BY	APP	REG NO	EXPIRES	SEAL HOLDER	DESCRIPTION
0	5/30/13	FL	KW	2870	9/30/13	KEN WONG	APPROVED FOR CONSTRUCTION

DESIGNED BY D. YOON
DRAWN BY E. RAMIREZ
CHECKED BY D. KATHURIA
IN CHARGE K.WONG
DATE 5/30/13

REGISTERED PROFESSIONAL ENGINEER KENNETH N. WONG No. 2870 Exp. 09/30/13 STRUCTURAL STATE OF CALIFORNIA

Exposition Metro Line Construction Authority
Expo
Exposition Construction Authority
Approved for Construction
Drawings - AFC
JUN 21 2013

EXPO SKANSKA RADOS

444 South Flower Street
Suite 2200
Los Angeles, CA 90071
TEL (213) 443-7463
FAX (213) 362-9481

PARSONS BRINCKERHOFF

miyamoto 700 South Flower Street, Suite 1010 T: (213) 362-7778
Los Angeles, CA 90017 E: info@miyamotointernational.com
MI0902064.03

CORRECTIONS

EXPOSITION LRT PROJECT- PHASE 2
COLORADO/4TH STREET STATION
STRUCTURAL
CANOPY DETAILS

CONTRACT NO XP8902-002
DRAWING NO S-S7-614
REV 0
SCALE AS NOTED
SHEET NO

I:\20009\MI0902064.03 Metro Expo Line Phase 2 Stage B\Drawings\1 Structural\07 Colorado 4th Street Station\expo2-S-S7-614.dw
30-May-13 2:41 PM Edgar Ramirez

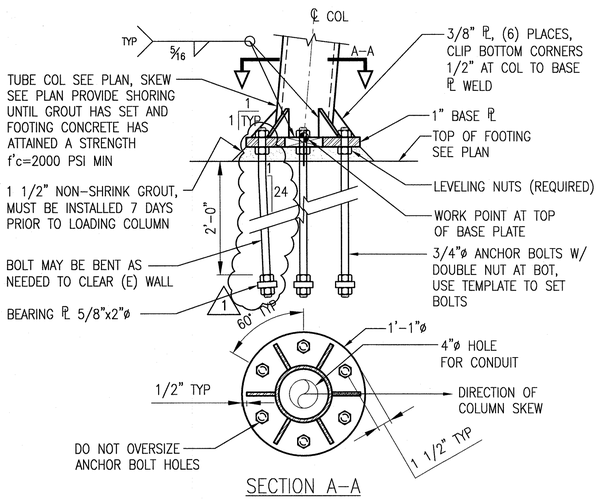

SECTION A–A

TICKETING CANOPY COLUMN BASE

1 1/2"=1'-0"

3 / S-S7-621

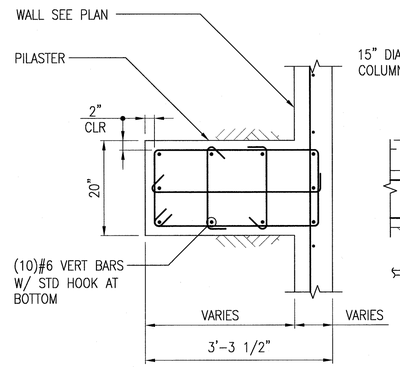

SECTION A–A

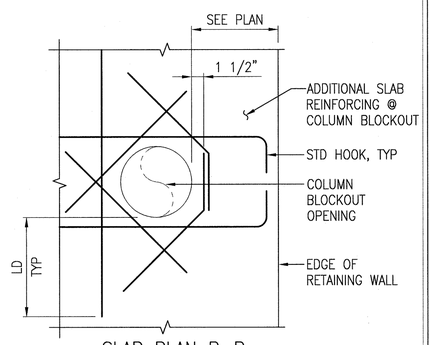

SLAB PLAN B–B

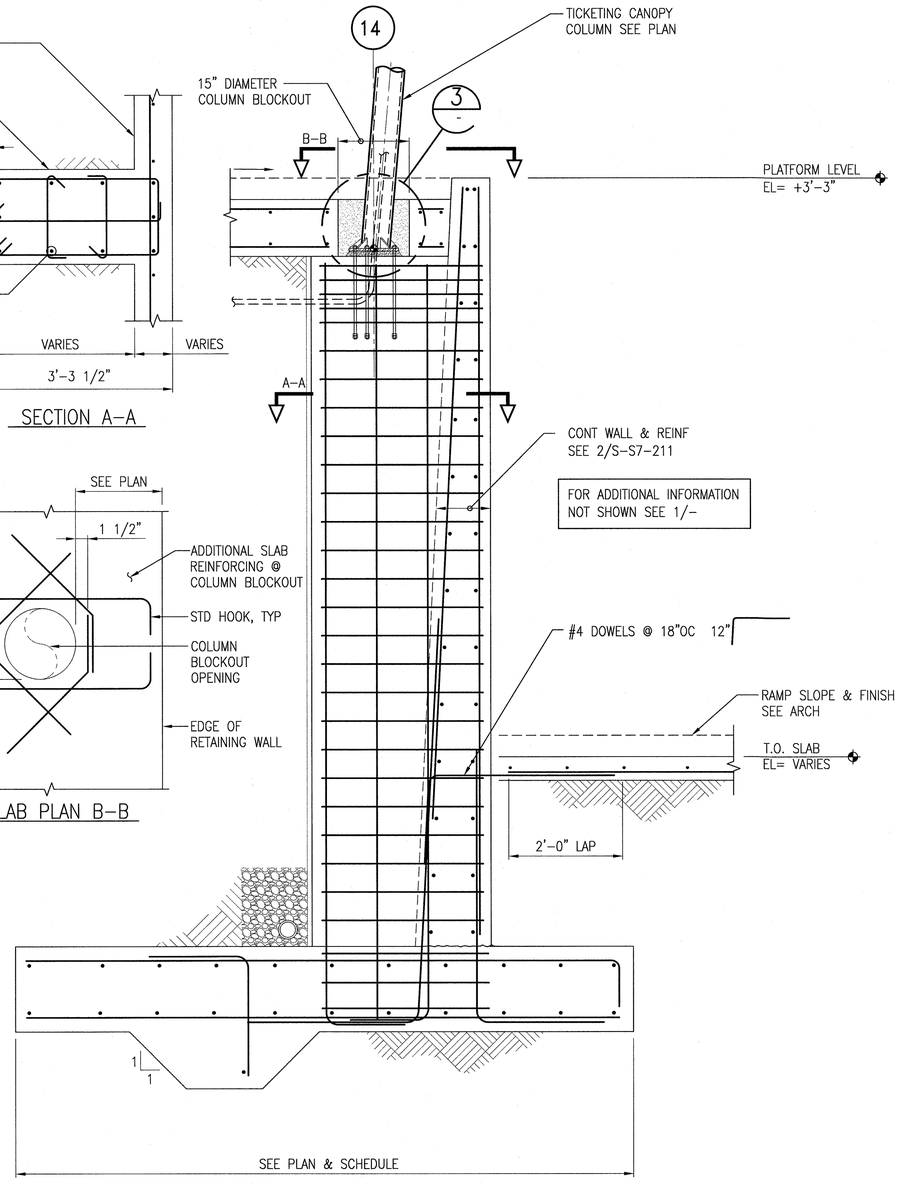

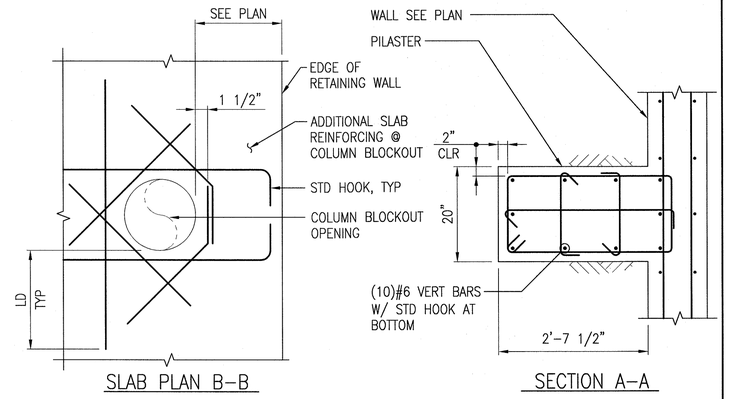

SLAB PLAN B–B

SECTION A–A

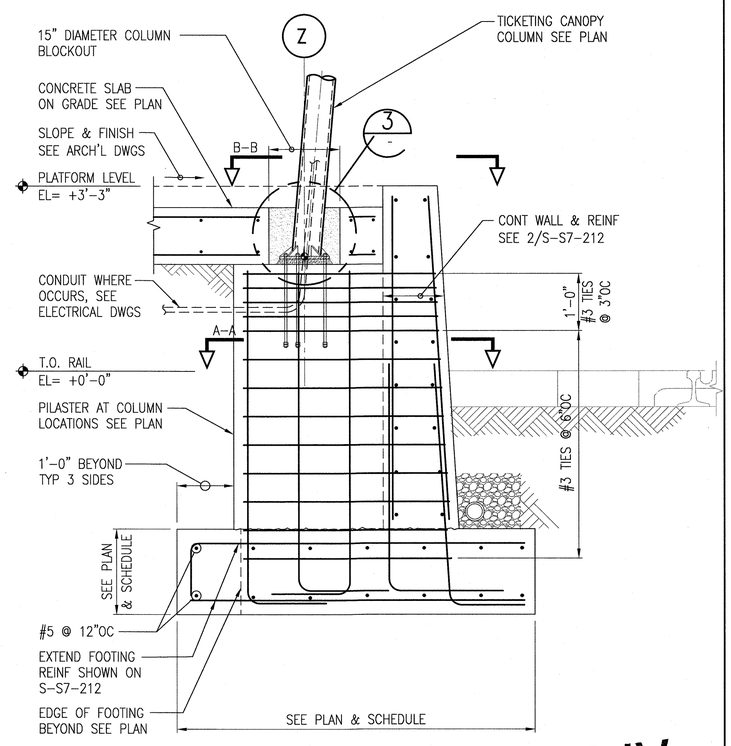

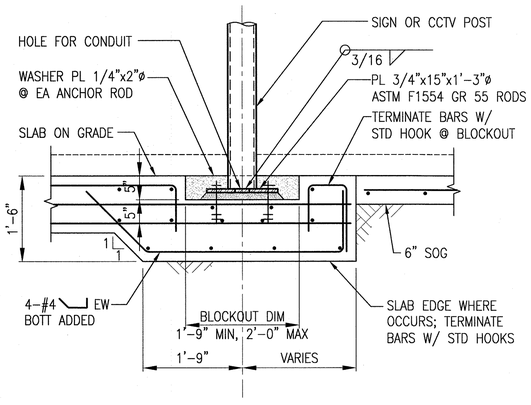

CCTV/LCD COL FTG ALTERNATE TO 3/-

3/4"=1'-0"

4 / S-S7-621

TICKETING CANOPY COLUMN FOOTING

3/4"=1'-0"

2 / S-S7-621

TICKETING CANOPY COLUMN FOOTING

3/4"=1'-0"

1 / S-S7-621

SRJV
MAR 03 2014
ISSUED FOR CONSTRUCTION

THE PREPARATION OF THIS DRAWING HAS BEEN FINANCED BY THE TAXES OF THE CITIZENS OF LOS ANGELES COUNTY AND OF THE STATE OF CALIFORNIA.

REV	DATE	BY	APP	REG NO	EXPIRES	SEAL HOLDER	DESCRIPTION
1	1/8/14	FL	KW	2870	9/30/13	KEN WONG	ECI 79
0	5/30/13	FL	KW	2870	9/30/13	KEN WONG	APPROVED FOR CONSTRUCTION

DESIGNED BY D. YOON
DRAWN BY E. RAMIREZ
CHECKED BY D. KATHURIA
IN CHARGE K.WONG
DATE 5/30/13

REGISTERED PROFESSIONAL ENGINEER KENNETH N. WONG No. 2870 Exp 09/30/13 STRUCTURAL STATE OF CALIFORNIA

Exposition Metro Line Construction Authority
Expo
Exposition Construction Authority Approved for Construction Drawings - AFC
FEB 28 2014

EXPO SKANSKA RADOS
444 South Flower Street Suite 2200 Los Angeles, CA 90071 TEL (213) 443-7463 FAX (213) 362-9481

PARSONS BRINCKERHOFF
miyamoto. 700 South Flower Street, Suite 1010 Los Angeles, CA 90017 T: (213) 362-7778 miyamotointernational.com
MI0902064.05
CURRENT STATUS

EXPOSITION LRT PROJECT- PHASE 2
EXPOSITION/4TH STREET STATION
STRUCTURAL
TICKETING AREA SECTIONS AND DETAILS

CONTRACT NO XP8902-002
DRAWING NO S-S7-621
REV 1
SCALE AS NOTED
SHEET NO

I:\2009\MI0902064.05 Metro Expo Line Phase 2 Stage B -4th\Colorado Stn Add Canopies\Drawings\expo2-S-S7-621.dwg
7-Jan-14 1:21 PM Edgar Ramirez

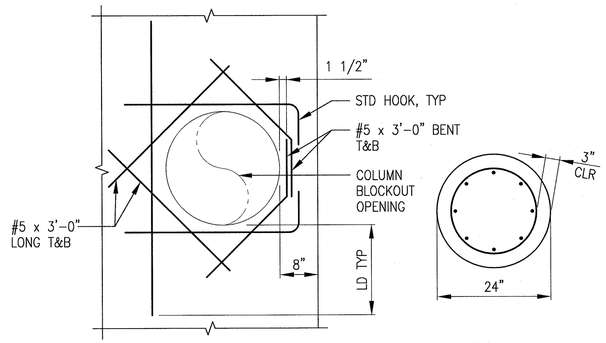

SLAB PLAN B-B

SECTION A-A

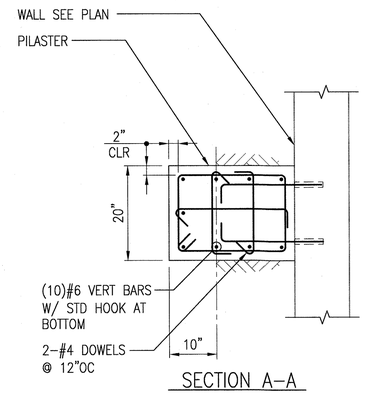

SECTION A-A

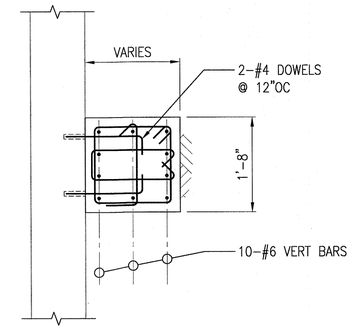

SECTION A-A

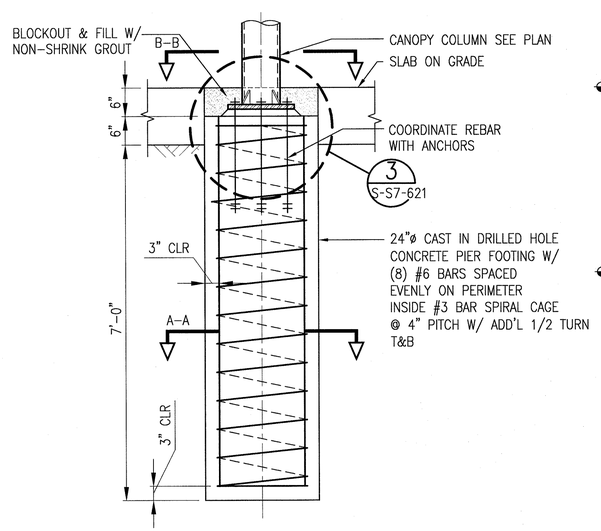

TICKETING CANOPY COLUMN FOOTING

3/4"=1'-0"

3 S-S7-622

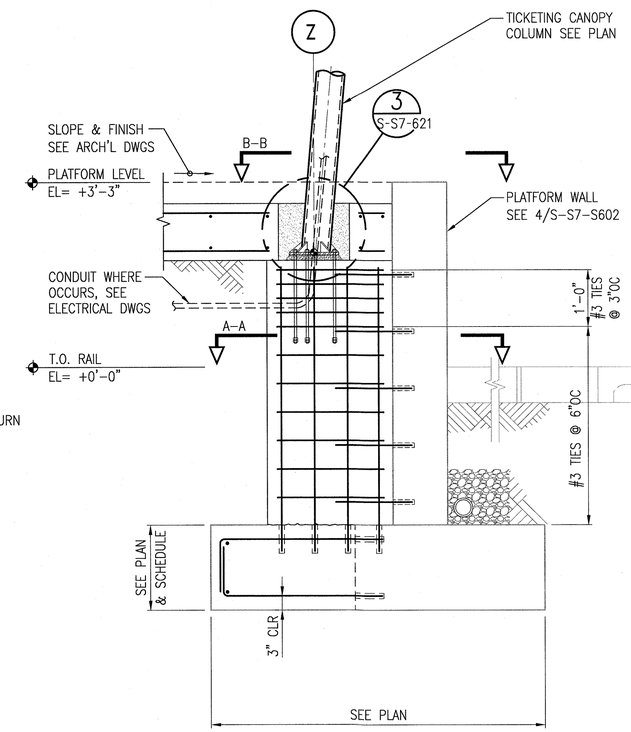

TICKETING CANOPY COLUMN FOOTING

3/4"=1'-0"

2 S-S7-622

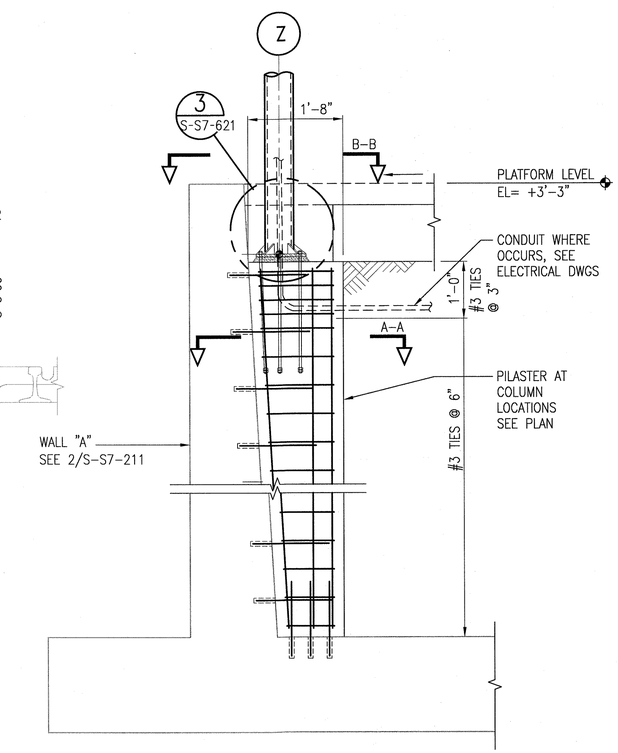

TICKETING CANOPY COLUMN FOOTING

3/4"=1'-0"

1 S-S7-622

SRJV
MAR 03 2014
ISSUED FOR CONSTRUCTION

THE PREPARATION OF THIS DRAWING HAS BEEN FINANCED BY THE TAXES OF THE CITIZENS OF LOS ANGELES COUNTY AND OF THE STATE OF CALIFORNIA.

REV	DATE	BY	APP	REG NO	EXPIRES	SEAL HOLDER	DESCRIPTION
0	1/8/14	FL	KW	2870	9/30/15	KEN WONG	ECI 79

DESIGNED BY D. YOON
DRAWN BY E. RAMIREZ
CHECKED BY D. KATHURIA
IN CHARGE K.WONG
DATE 1/8/14

REGISTERED PROFESSIONAL ENGINEER KENNETH N. WONG No. 2870 Exp. 09/30/15 STRUCTURAL STATE OF CALIFORNIA

Exposition Metro Line Construction Authority
Expo
Exposition Construction Authority Approved for Construction Drawings - AFC
FEB 28 2014

EXPO SKANSKA RADOS
444 South Flower Street
Suite 2200
Los Angeles, CA 90071
TEL (213) 443-7463
FAX (213) 362-9481

PARSONS BRINCKERHOFF
miyamoto. 700 South Flower Street, Suite 1010 T: (213) 362-7778 Los Angeles, CA 90017 miyamotointernational.com
MI0902064.05
CURRENT STATUS

EXPOSITION LRT PROJECT- PHASE 2
EXPOSITION/4TH STREET STATION
STRUCTURAL
TICKETING AREA SECTIONS AND DETAILS

CONTRACT NO XP8902-002
DRAWING NO S-S7-622
REV 0
SCALE AS NOTED
SHEET NO

I:\2009\MI\0902064.05 Metro Expo Line Phase 2 Stage B -4thColorado Stn Add Canopies\Drawings\expo2-S-S7-622.dwg
23-Jan-14 9:51 AM Eric Ramos

I:\2109\MI09\2064.03 Metro Expo Line Phase 2 Stage 8\Drawings\1 Structural\07 Colorado_4th Street Station\expo2-S-S7-631.dwg
30-May-13 2:41 PM Edgar Ramirez

DRFI 10266

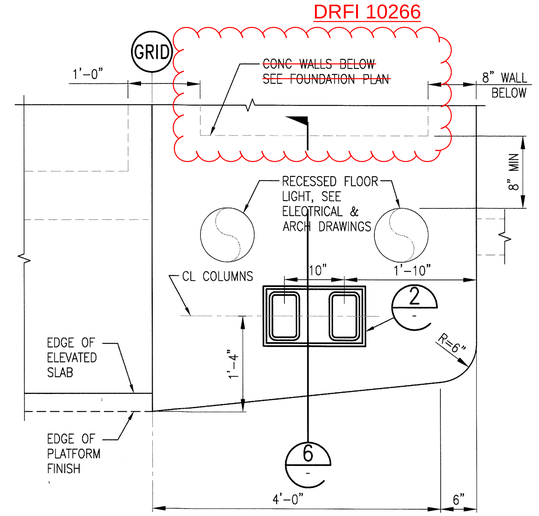

PLAN DETAIL AT PLATFORM END

1"=1'-0" — 3 / S-S7-631

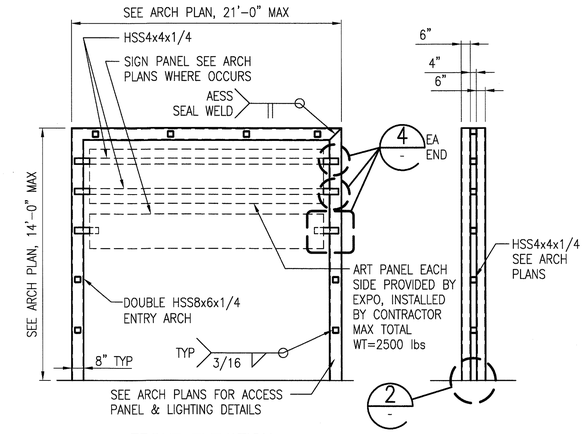

FRONT ELEVATION

SIDE ELEVATION

NOTES:

1. SEE ARCH DETAIL FOR ADDITIONAL INFORMATION.

METAL GATEWAY ARCH ELEVATION

NO SCALE — 1 / S-S7-631

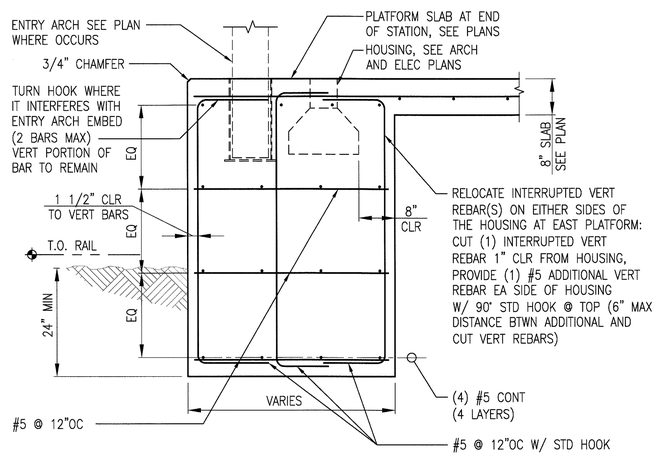

DETAIL

3/4"=1'-0" — 6 / S-S7-631

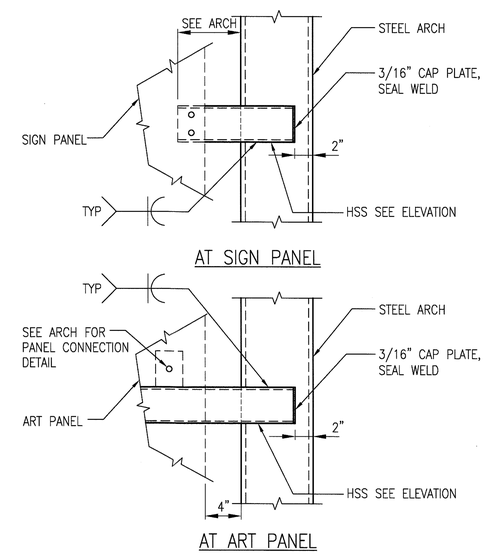

CONNECTION DETAIL

1 1/2"=1'-0" — 4 / S-S7-631

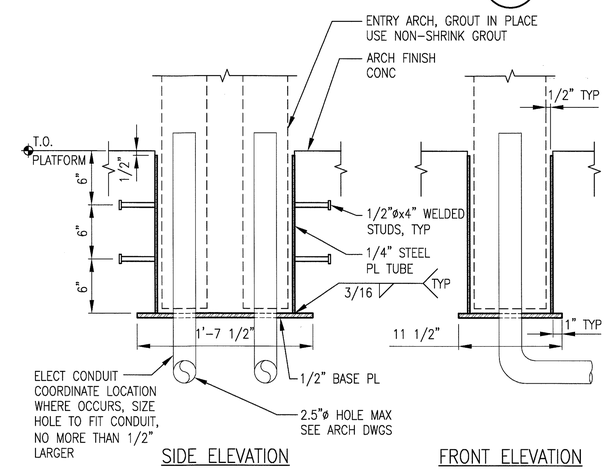

SIDE ELEVATION

FRONT ELEVATION

SRJV
JUN 24 2013
ISSUED FOR CONSTRUCTION

METAL GATEWAY ARCH BASE PLATE

1 1/2"=1'-0" — 2 / S-S7-631

THE PREPARATION OF THIS DRAWING HAS BEEN FINANCED BY THE TAXES OF THE CITIZENS OF LOS ANGELES COUNTY AND OF THE STATE OF CALIFORNIA.

REV	DATE	BY	APP	REG NO	EXPIRES	SEAL HOLDER	DESCRIPTION
0	5/30/13	FL	KW	2870	9/30/13	KEN WONG	APPROVED FOR CONSTRUCTION

DESIGNED BY D. YOON
DRAWN BY E. RAMIREZ
CHECKED BY D. KATHURIA
IN CHARGE K.WONG
DATE 5/30/13

REGISTERED PROFESSIONAL ENGINEER KENNETH N. WONG No. 2870 Exp 09/30/13 STRUCTURAL STATE OF CALIFORNIA

Exposition Metro Line Construction Authority
Expo

Exposition Construction Authority Approved for Construction Drawings - AFC

JUN 21 2013

EXPO SKANSKA RADOS
444 South Flower Street Suite 2200 Los Angeles, CA 90071 TEL (213) 443-7463 FAX (213) 362-9481

PARSONS BRINCKERHOFF

miyamoto 700 South Flower Street, Suite 1010 Los Angeles, CA 90017 T: (213) 362-7778 www.miyamotointernational.com
MI0902064.03

CURRENT STATUS

EXPOSITION LRT PROJECT- PHASE 2
COLORADO/4TH STREET STATION
STRUCTURAL
METAL GATEWAY ARCH AND PLATFORM SECTIONS AND DETAILS

CONTRACT NO XP8902-002
DRAWING NO S-S7-631 REV 0
SCALE AS NOTED
SHEET NO

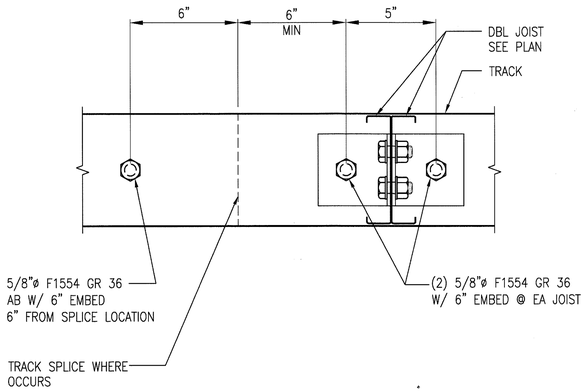

LEDGER SPLICE
3/4"=1'-0"
7 S-S7-641

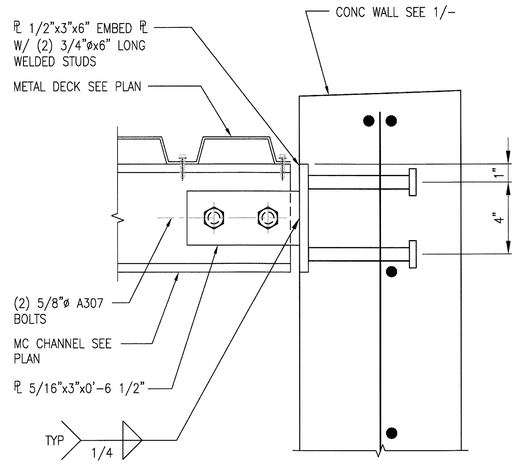

MC TO WALL
3"=1'-0"
5 S-S7-641

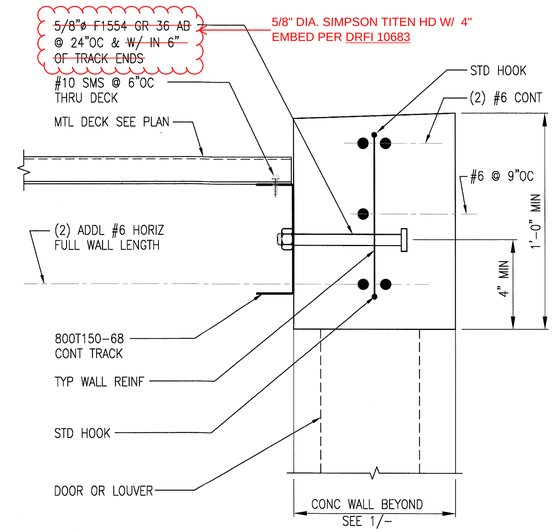

ROOF DETAIL
3"=1'-0"
3 S-S7-641

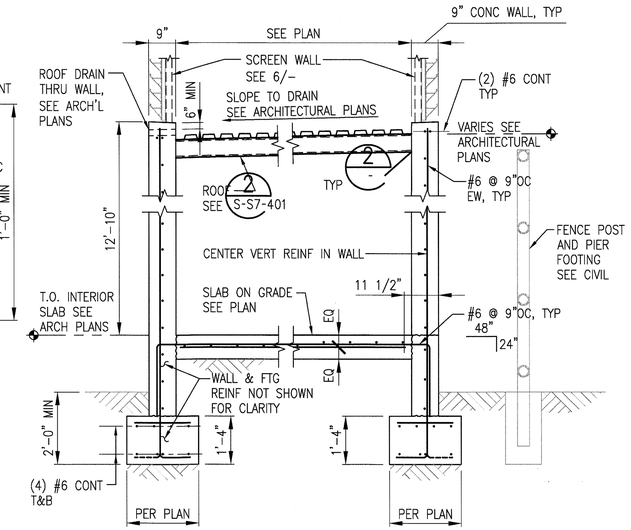

COMM/SIGNAL BUILDING SECTION
1/2"=1'-0"
1 S-S7-641

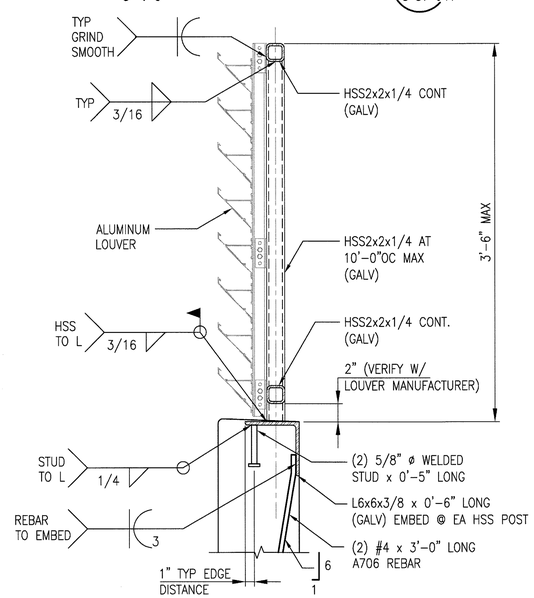

SCREEN WALL
1 1/2"=1'-0"
6 S-S7-641

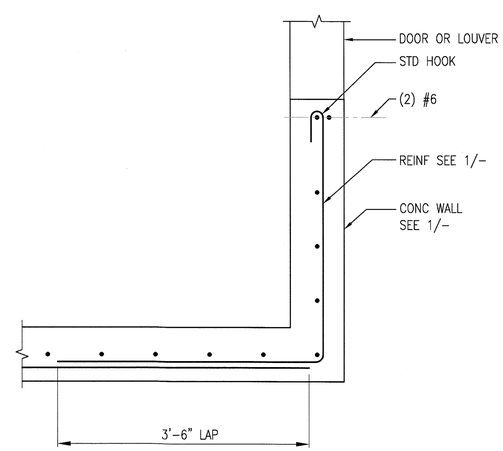

WALL CORNER DETAIL
1"=1'-0"
4 S-S7-641

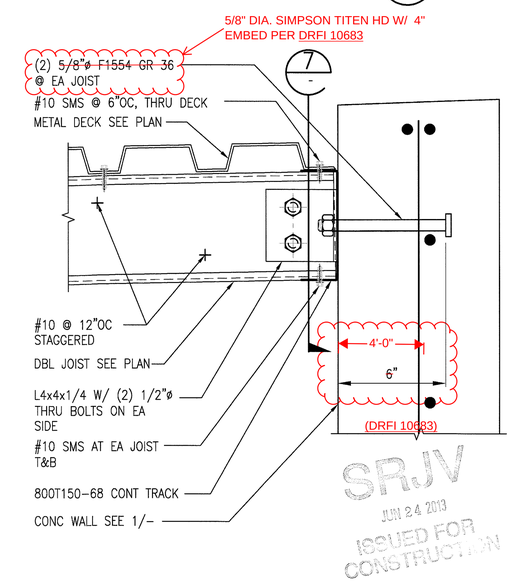

SRJV
JUN 24 2013
ISSUED FOR CONSTRUCTION

ROOF CONNECTION DETAIL
3"=1'-0"
2 S-S7-641

THE PREPARATION OF THIS DRAWING HAS BEEN FINANCED BY THE TAXES OF THE CITIZENS OF LOS ANGELES COUNTY AND OF THE STATE OF CALIFORNIA.

REV	DATE	BY	APP	REG NO	EXPIRES	SEAL HOLDER	DESCRIPTION
0	5/30/13	FL	KW	2870	9/30/13	KEN WONG	APPROVED FOR CONSTRUCTION

DESIGNED BY D. YOON
DRAWN BY E. RAMIREZ
CHECKED BY D. KATHURIA
IN CHARGE K.WONG
DATE 5/30/13

REGISTERED PROFESSIONAL ENGINEER KENNETH N. WONG No. 2870 Exp. 09/30/13 STRUCTURAL STATE OF CALIFORNIA

Exposition Metro Line Construction Authority
Expo
Exposition Construction Authority Approved for Construction Drawings - AFC
JUN 21 2013
EXPO SKANSKA RADOS
444 South Flower Street
Suite 2200
Los Angeles, CA 90071
TEL (213) 443-7463
FAX (213) 362-9481
PARSONS BRINCKERHOFF
miyamoto 2001 South Flower Street, Suite 1010 T: (213) 362-7778 Los Angeles, CA 90017 miyamotointernational.com
M10902064.03

EXPOSITION LRT PROJECT- PHASE 2
COLORADO/4TH STREET STATION
STRUCTURAL
COMMUNICATIONS/SIGNAL BUILDING
SECTIONS AND DETAILS

CONTRACT NO XP8902-002
DRAWING NO S-S7-641
REV 0
SCALE AS NOTED
SHEET NO

H:\2009\M10902064.03 Metro Expo Line Phase 2 Stage B\Drawings\1 Structural\07 Colorado_4th Street Station\exp02-S-S7-641.dw
30-May-13 2:42 PM Edgar Ramirez

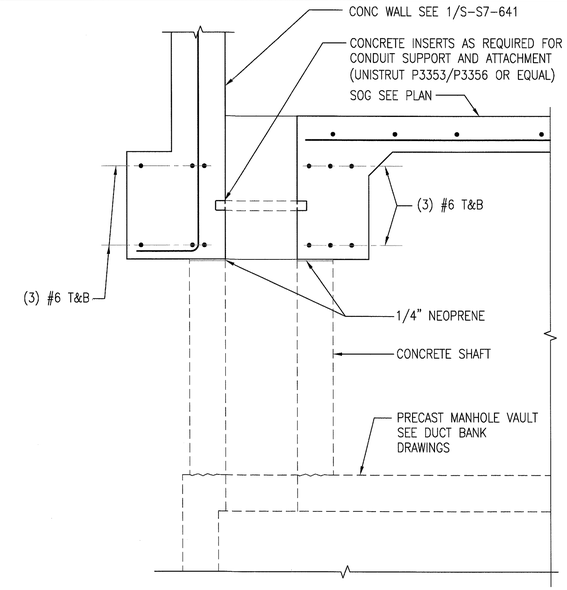

SECTION AT OPENING

1"=1'-0"

3 / S-S7-642

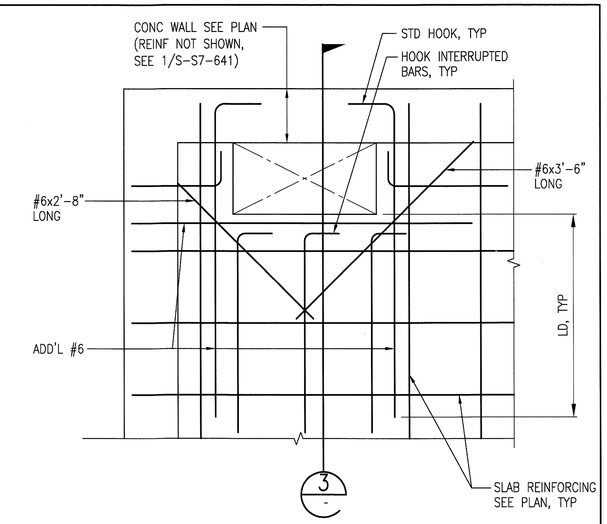

SLAB REINFORCING PLAN AT OPENING

1"=1'-0"

1 / S-S7-642

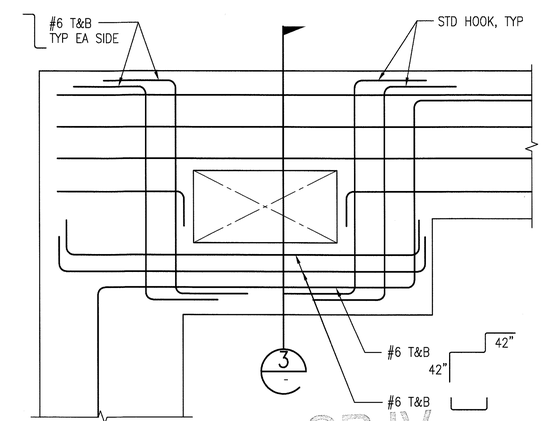

FOOTING REINFORCING PLAN AT OPENING

1"=1'-0"

2 / S-S7-642

SRJV
JUN 24 2013
ISSUED FOR CONSTRUCTION

THE PREPARATION OF THIS DRAWING HAS BEEN FINANCED BY THE TAXES OF THE CITIZENS OF LOS ANGELES COUNTY AND OF THE STATE OF CALIFORNIA.

REV	DATE	BY	APP	REG NO	EXPIRES	SEAL HOLDER	DESCRIPTION
0	5/30/13	FL	KW	2870	9/30/13	KEN WONG	APPROVED FOR CONSTRUCTION

DESIGNED BY D. YOON
DRAWN BY E. RAMIREZ
CHECKED BY D. KATHURIA
IN CHARGE K.WONG
DATE 5/30/13

REGISTERED PROFESSIONAL ENGINEER KENNETH N. WONG No. 2870 Exp 09/30/13 STRUCTURAL STATE OF CALIFORNIA

Exposition Metro Line Construction Authority
Expo
Exposition Construction Authority
Approved for Construction
Drawings - AFC
JUN 21 2013

EXPO SKANSKA RADOS

444 South Flower Street
Suite 2200
Los Angeles, CA 90071
TEL (213) 443-7463
FAX (213) 362-9481

PARSONS BRINCKERHOFF

miyamoto 700 South Flower Street, Suite 1010 T: (213) 362-7778 www.miyamotointernational.com
MI09020464.03

COPY (CONFORMS TO ORIGINAL)

EXPOSITION LRT PROJECT- PHASE 2
COLORADO/4TH STREET STATION
STRUCTURAL
COMMUNICATIONS/SIGNAL BUILDING
SECTIONS AND DETAILS

CONTRACT NO XP8902-002
DRAWING NO S-S7-642
REV 0
SCALE AS NOTED
SHEET NO

I:\2012\09\MI09020464.03 Metro Expo Line Phase 2 Stage B\Drawings\1 Structural\07 Colorado 4th Street Station\exp02-S-S7-642.dw
30-May-13 2:42 PM Edgar Ramirez

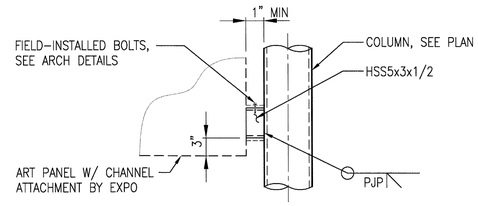

TAB AT ART PANEL (A)

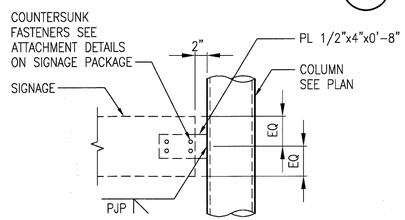

CONN AT SIGNAGE (B)

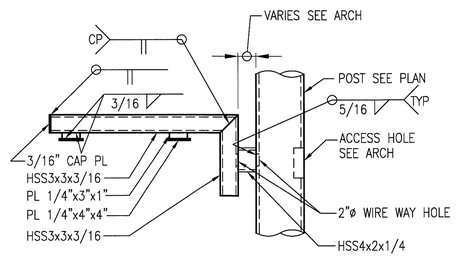

CONN AT VMS (C)

DETAIL (5)
S-S7-651

1"=1'-0"

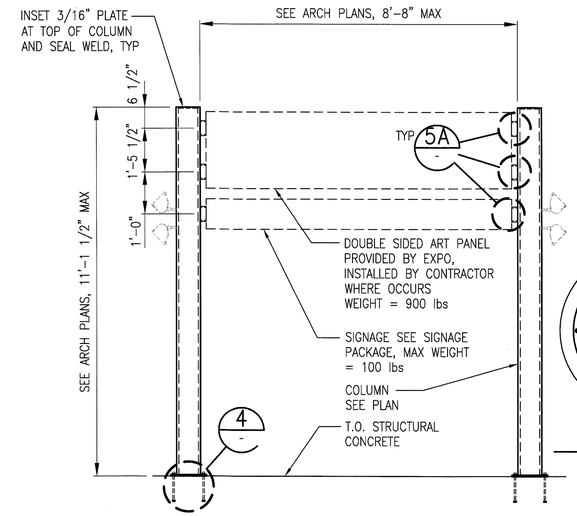

SIGNAGE MODULE (3)
S-S7-651

1/2"=1'-0"

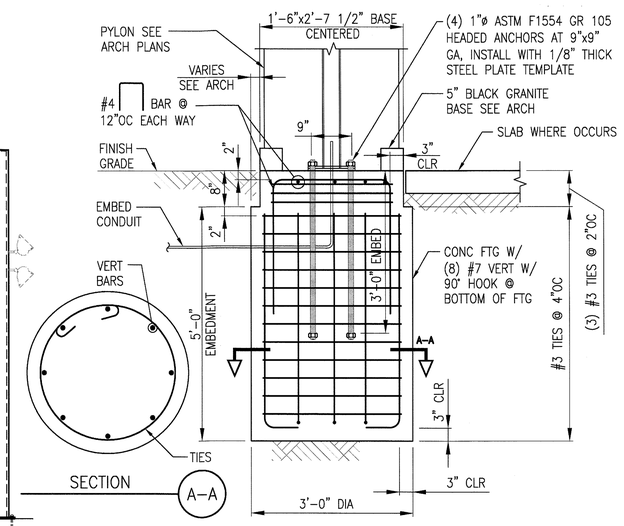

SECTION (A-A)

NOTES:

1. SEE ARCH DRAWING "METRO GRAND PYLON DETAILS" FOR ADDITIONAL INFO

FOUNDATION AT PYLON (1)
S-S7-651

3/4"=1'-0"

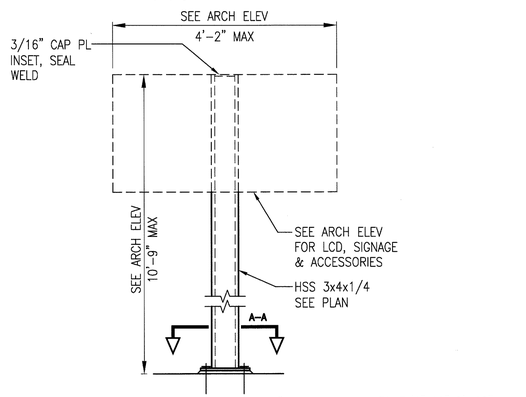

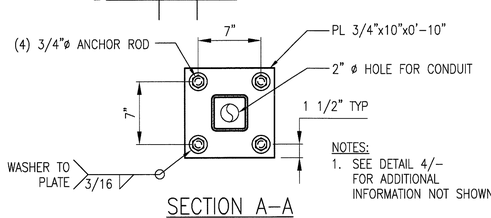

SECTION A-A

NOTES:

1. SEE DETAIL 4/- FOR ADDITIONAL INFORMATION NOT SHOWN.

SIGN COLUMN-LCD (7)
S-S7-651

3/4"=1'-0"

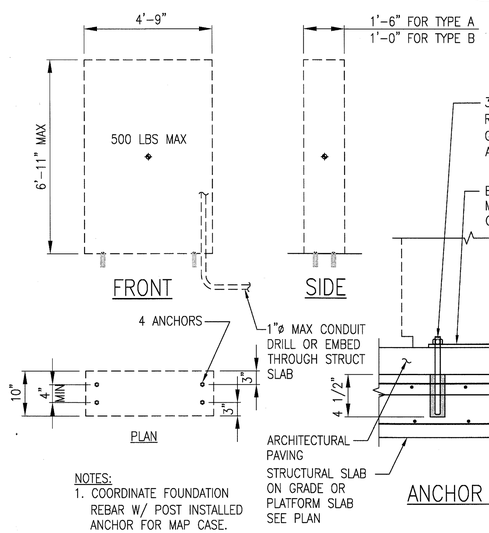

NOTES:

1. COORDINATE FOUNDATION REBAR W/ POST INSTALLED ANCHOR FOR MAP CASE.

MAP CASE ANCHORAGE (6)
S-S7-651

1"=1'-0"

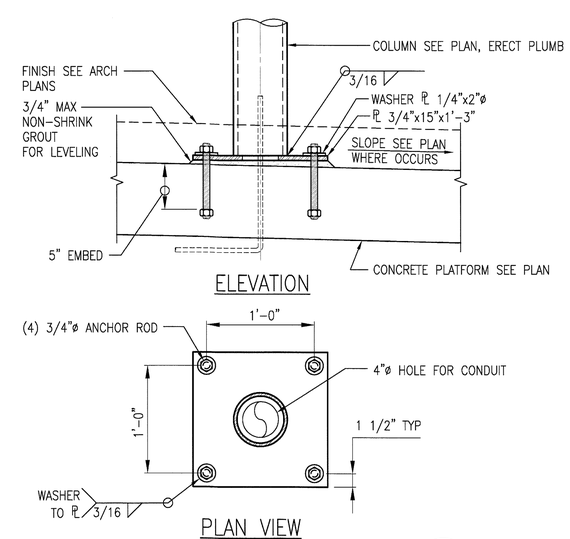

SIGN COLUMN CONNECTION (4)
S-S7-651

1 1/2"=1'-0"

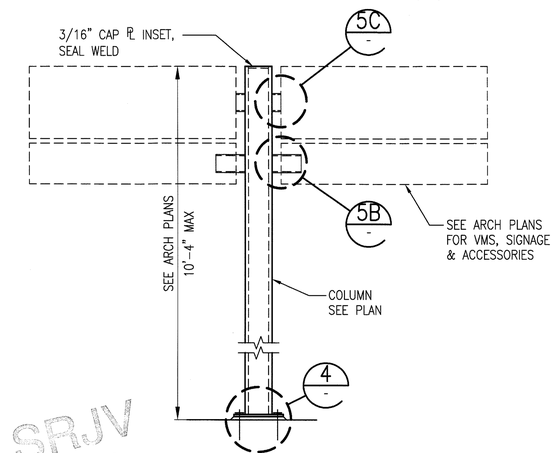

SRJV
JUN 24 2013
ISSUED FOR CONSTRUCTION

SIGN COLUMN-LED (2)
S-S7-651

3/4"=1'-0"

THE PREPARATION OF THIS DRAWING HAS BEEN FINANCED BY THE TAXES OF THE CITIZENS OF LOS ANGELES COUNTY AND OF THE STATE OF CALIFORNIA.

REV	DATE	BY	APP	REG NO	EXPIRES	SEAL HOLDER	DESCRIPTION
0	5/30/13	FL	KW	2870	9/30/13	KEN WONG	APPROVED FOR CONSTRUCTION

DESIGNED BY D. YOON
DRAWN BY E. RAMIREZ
CHECKED BY D. KATHURIA
IN CHARGE K.WONG
DATE 5/30/13

REGISTERED PROFESSIONAL ENGINEER KENNETH N WONG No. 2870 Exp 09/30/13 STRUCTURAL STATE OF CALIFORNIA

Exposition Metro Line Construction Authority
Expo
Exposition Construction Authority Approved for Construction Drawings - AFC
JUN 21 2013

EXPO SKANSKA RADOS
444 South Flower Street Suite 2200 Los Angeles, CA 90071 TEL (213) 443-7463 FAX (213) 362-9481

PARSONS BRINCKERHOFF

miyamoto 700 South Flower Street, Suite 1010 Los Angeles, CA 90071 T: (213) 362-7778 F: (213) 362-7779 www.miyamotointernational.com
MI0902064.03

AS BUILT STATUS

EXPOSITION LRT PROJECT- PHASE 2
COLORADO/4TH STREET STATION
STRUCTURAL
MISCELLANEOUS DETAILS

CONTRACT NO XP8902-002
DRAWING NO S-S7-651
REV 0
SCALE AS NOTED
SHEET NO

i:\20009\MI09\02064.03 Metro Expo Line Phase 2 Stage B\Drawings\1 Structural\07 Colorado_4th Street Station\expo2-S-S7-651.dgn
30-May-13 2:42 PM Edgar Ramirez

ABBREVIATIONS AND LEGEND

PLUMBING ABBREVIATIONS

AFF	ABOVE FINISHED FLOOR	NPT	NATIONAL PIPE THREAD
CI	CAST IRON	OFRD	OVERFLOW ROOF DRAIN
CONT	CONTINUOUS	POS	PROVIDED UNDER OTHER SECTIONS
CO	CLEANOUT	PSI	POUNDS PER SQUARE INCH
CW	COLD WATER	PSIG	POUNDS PER SQUARE INCH GAUGE
DIA	DIAMETER	PVC	POLYVINYL CHLORIDE
DN	DOWN	PW	PROTECTED WATER
DWH	DOMESTIC WATER HEATER	RD	ROOF DRAIN
ECO	END CLEAN OUT	RPBFP	REDUCED PRESSURE BACKFLOW PREVENTER
FCO	FLOOR CLEAN OUT	SA	SHOCK ARRESTOR
FD	FLOOR DRAIN	SAN	SANITARY PIPING
FHC	FIRE HOSE CABINET	SCH	SCHEDULE
GA	GAUGE	SHTML	SHEETMETAL
GPM	GALLONS PER MINUTE	SF	SQUARE FEET
HB	HOSE BIBB	ST	STORM DRAIN
HW	HOT WATER	S/W	SANITARY/WASTE
IE	INVERT ELEVATION	THRU	THROUGH
INSUL.	INSULATION	TP	TRAP PRIMER
IWC	INDIRECT WASTE CONNECTOR	TYP	TYPICAL
L	LENGTH	UR	URINAL
LAV	LAVATORY	V	VENT
LOW	LIMIT OF WORK	VTR	VENT THROUGH ROOF
MANUF	MANUFACTURER	W/	WITH
NO	NUMBER	WC	WATER CLOSET
NPCW	NON-POTABLE COLD WATER	WSP	WET SPRINKLER PIPING

PLUMBING LEGEND:

— — —— CW	COLD WATER
- - - - - CW	COLD WATER (BELOW GROUND OR FLOOR)
—— - - —— HW	HOT WATER
- - - - V	VENT
= = = = V	VENT (BELOW GROUND OR FLOOR)
—— S/W	SANITARY OR WASTE
- - - - S/W	SANITARY OR WASTE (BELOW GRND OR FLR)
—— ST	STORM DRAIN
- - - - ST	STORM DRAIN (BELOW GRND OR FLR)
—— HB	HOSE BIBB
	BALL VALVE
	CHECK VALVE
	BACKWATER VALVE VALVE
	GATE VALVE
	PRESSURE REDUCING VALVE
	PRESSURE AND TEMPERATURE RELIEF VALVE
	PRESSURE GAUGE
T	THERMOMETER
	RISER DOWN
	BRANCH-TOP CONNECTION
	BRANCH-BOTTOM CONNECTION
	CAP ON END OF PIPE
	TEE
	CONCENTRIC REDUCER
	UNION
	STRAINER
	DIRECTION OF FLOW
	DOWNWARD DIRECTION OF PIPE PITCH
— CO	CLEAN OUT
CO	CLEAN OUT
FD	FLOOR DRAIN
TP	TRAP PRIMER

SYMBOLS

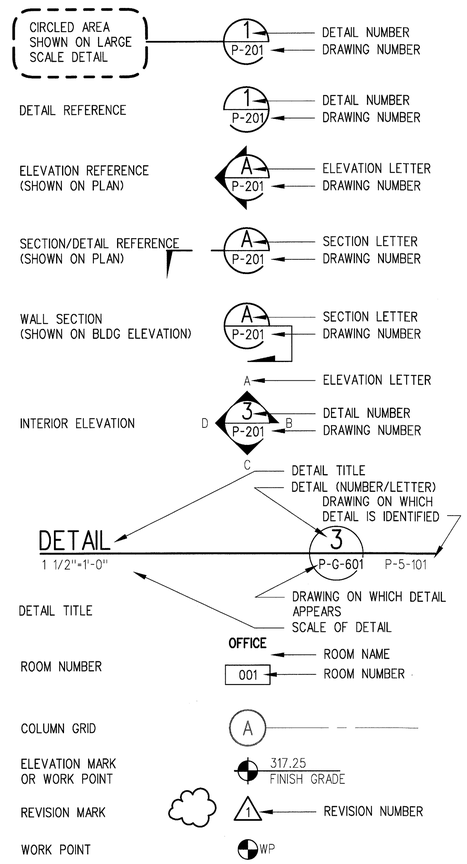

GENERAL NOTES

PLUMBING NOTES

1. INTENT: THE INTENT OF THE DRAWINGS IS TO PROVIDE THAT THE WORK AND ALL PARTS THEREOF SHALL BE, WHEN FULLY COMPLETED, SUITABLE IN EVERY WAY FOR THE PURPOSES FOR WHICH IT IS INTENDED. PROVIDE ALL MATERIALS AND LABOR NECESSARY TO MAKE THE SYSTEM FULLY OPERABLE AND IN COMPLIANCE WITH ALL APPLICABLE CODES. WORK SHALL BE IN ACCORDANCE WITH THE LATEST EDITION OF THE STATE BUILDING CODE AND LOCAL AMENDMENTS.
2. DRAWINGS: THE DRAWINGS ARE SCHEMATIC REPRESENTATIONS OF THE WORK TO BE DONE.
3. COORDINATION: COORDINATE ALL WORK AND WORK SCHEDULES WITH THAT OF OTHER TRADES AFFECTED BY THE ENTIRE SCOPE OF THE PROJECT SO THAT ALL WORK MAY BE INSTALLED IN THE MOST DIRECT AND WORKMANLIKE MANNER AND SO THAT INTERFERENCE WITH DUCTWORK, PIPING, EQUIPMENT, ELECTRICAL, ARCHITECTURAL AND STRUCTURAL COMPONENTS AND OTHER WORK IS AVOIDED.
4. INSTALLATION SHALL PERMIT ACCESSIBILITY FOR SERVICE OR REPLACEMENT. COORDINATE INSTALLATION OF ALL EQUIPMENT AND COMPONENTS FOR ACCESSIBILITY TO MEET MANUFACTURER SUGGESTED CLEARANCES AROUND EQUIPMENT FOR MAINTENANCE AND REPAIR. THE INSTALLATION OF BUILDING MATERIALS AND COMPONENTS SHALL ALLOW SUFFICIENT SPACE FOR MAINTENANCE AND SERVICE WITHOUT LIMITED RANGE OF MOTION THAT WOULD REQUIRE DECONSTRUCTION OF THE SPACE OR INSTALLATION TO PROVIDE THE REQUIRED SERVICE.
5. WHEREVER THE REQUIREMENTS AND REGULATIONS OF FEDERAL OR STATE ARE MORE STRINGENT THAN THE REQUIREMENTS INDICATED ON THE DRAWINGS OR SPECIFICATIONS, THEY SHALL TAKE PRECEDENCE OVER THE DRAWINGS OR SPECIFICATIONS AND SHALL BE MADE PART OF THE CONTRACT. HOWEVER WHERE THE DRAWINGS OR SPECIFICATIONS ARE MORE STRINGENT THAN FEDERAL OR STATE AUTHORITY REQUIREMENTS AND REGULATION, THE MORE STRINGENT SHALL APPLY.
6. ALL EQUIPMENT, MATERIALS, LABOR AND TESTING PERFORMED HEREIN SHALL BE IN COMPLETE ACCORDANCE WITH THE CALIFORNIA STATE PLUMBING CODE AND OTHER REQUIREMENTS GOVERNING SUCH WORK.
7. PIPE ROUTING IS FOR GENERAL REFERENCE ONLY. ACTUAL ROUTING OF PIPING SHALL BE THOROUGHLY COORDINATED WITH OTHER TRADES AND BUILDING STRUCTURE PRIOR TO SUBMISSION OF COORDINATED WORKING DRAWINGS. ALL CEILING HEIGHTS INDICATED ARE APPROXIMATE. THIS CONTRACTOR SHALL BE RESPONSIBLE FOR VERIFYING ALL NECESSARY MEASUREMENT REQUIRED FOR PRODUCING HIS WORKING DRAWINGS.
8. SEE TYPICAL TRENCH DETAIL ON THE WATER RELOCATION DRAWINGS FOR PIPE DEPTH AND TRENCHING AND BACKFILLING REQUIREMENTS.
9. ALL PIPING SHALL BE PROTECTED AGAINST DAMAGE FROM EARTHQUAKES. EARTHQUAKE PROTECTION SHALL BE IN ACCORDANCE WITH THE LATEST EDITION OF APPLICABLE LOCAL CODES.
10. WORK SHALL BE PROPERLY AND EFFECTIVELY PROTECTED AND PIPE OPENINGS SHALL BE TEMPORARILY CLOSED TO PREVENT OBSTRUCTION AND DAMAGE BEFORE COMPLETION.

10. ALL ELEMENTS OF WORK ARE TO BE CONSIDERED NEW UNLESS INDICATED EXISTING OR RELOCATED
11. ALL OPENINGS WHERE PIPES PENETRATE FLOOR, WALLS AND ROOFS SHALL BE SEALED TO PREVENT AIR AND MOISTURE MOVEMENT.
12. SEAL ALL OPENINGS WHERE PIPES PENETRATE SLABS AND WALLS TO PREVENT AIR AND MOISTURE FLOW BETWEEN SPACES AND FROM OUTSIDE TO INSIDE OF BUILDING. USE UL APPROVED MATERIALS AND ASSEMBLIES TO SEAL OPENINGS IN RATED WALLS.
13. ALL UNDERGROUND PIPING SHALL HAVE CORROSION PROTECTION. REFER TO SPECIFICATIONS FOR REQUIREMENTS.

PLUMBING FIXTURE SCHEDULE

TYPE	DESCRIPTION	MANUFAC.	MODEL	LOCATION	CW	HW	W	V	REMARKS
WC-1	WATER CLOSET	KOHLER	K-4302	COLORADO/4TH ST STATION	1"	--	4"	2"	WALL MOUNTED, FLUSH VALVE, ACCESSIBLE TYPE
LAV-1	LAVATORY	KOHLER	K-2054	COLORADO/4TH ST STATION	½"	½"	1½"	1¼"	WALL MOUNTED, ACCESSIBLE TYPE
HB-1	FLOOR RECESSED HOSE BIBB	ZURN	Z1375	ALL AT GRADE STATIONS	¾"	--	--	--	MOUNTED IN PLATFORM RECESSED FLOOR BOX
HB-2	HOSE BIBB AT BATHROOM	WOODFORD	24CH	COLORADO/4TH ST STATION	¾"	--	--	--	

PROVIDE KOHLER, AMERICAN STANDARD, ZURN, WOODFORD OR EQUAL

SRJV
JUN 24 2013
ISSUED FOR CONSTRUCTION

INSTANTANEOUS ELECTRIC WATER HEATER SCHEDULE

UNIT NO.	MANUF.	MODEL	LOCATION	CAPACITY KW	ELECTRIC VOLT	ELECTRIC PH	ELECTRIC AMPS	REMARKS (SEE BELOW)
DWH-1	EEMAX	SP48	CONDUCTOR'S LOUNGE BATHROOM	4.8	240	1	20	1

NOTES: EEMAX USED AS BASIS OF DESIGN. PROVIDE EEMAX, INSINKERATOR, STIEBEL ELTRON OR APPROVED EQUAL.
1 PROVIDE FLOW RESTRICTOR AERATOR, TOP CONNECTION, IN LINE FLOW RESTRICTOR FOR SINGLE LAVATORY.

DRAIN SCHEDULE

TYPE	MANUF.	MODEL	GRATE AND FINISH	LOCATION	REMARKS
FD-A	ZURN	Z415S	NICKEL BRONZE	4TH ST STATION BATHROOM	5"x5" GRATE, CAST IRON BODY W/TRAP PRIMER CONNECTION
AD-A	ZURN	FD-2330	8" DIA CI	PLAZA & RAMP	AREA DRAIN W/SEDIMENT BUCKET & 4" DIA OUTLET

BASIS OF DESIGN IS WATTS, ZURN & JR SMITH PROVIDE WATTS, ZURN, JR SMITH OR EQUAL

THE PREPARATION OF THIS DRAWING HAS BEEN FINANCED BY THE TAXES OF THE CITIZENS OF LOS ANGELES COUNTY AND OF THE STATE OF CALIFORNIA.

REV.	DATE	BY	APP	REG NO	EXPIRES	SEAL HOLDER	DESCRIPTION
0	5/30/13	RG	RG	M33848	9/30/13	RONALD B. GOLAY	APPROVED FOR CONSTRUCTION

DESIGNED BY R.GOLAY
DRAWN BY R.GOLAY
CHECKED BY D.HAMILTON
IN CHARGE R.GOLAY
DATE 5/30/13

REGISTERED PROFESSIONAL ENGINEER — RONALD B. GOLAY — No. M33848 — Exp. 09-30-13 — MECHANICAL — STATE OF CALIFORNIA

Exposition Metro Line Construction Authority
Expo
EXPO SKANSKA RADOS
444 South Flower Street
Suite 2200
Los Angeles, CA 90071
TEL (213) 443-7463
FAX (213) 362-9481

Exposition Construction Authority Approved for Construction Drawings - AFC
PARSONS BRINCKERHOFF
JUN 21 2013
CURRENT STATUS

EXPOSITION LRT PROJECT- PHASE 2
PLUMBING
COMMON FOR 4TH ST STATION
ABBREVIATION, LEGEND, SYMBOLS, SCHEDULES AND GENERAL NOTES

CONTRACT NO XP8902-002
DRAWING NO PL-CB-001
REV. 0
SCALE NONE
SHEET NO

C:\projectwise\pb\projectwiseintgbay\dms09060\exp02-PL-CB-001.dwg
29-May-13 2:54 PM Golay, Ron

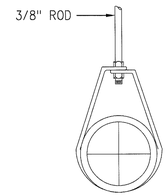

3" & LESS UNINSULATED PIPING

NOTES:

RODS, HANGERS, FASTENERS, SADDLES AND ALL OTHER COMPONENTS SHALL BE HOT DIPPED GALVANIZED STEEL. COMPONENTS NOT AVAILABLE AS HOT DIPPED GALVANIZED STEEL SHALL BE ELECTRO GALVANIZED.

PIPE HANGER DETAIL (1 / PL-CB-002)

NO SCALE

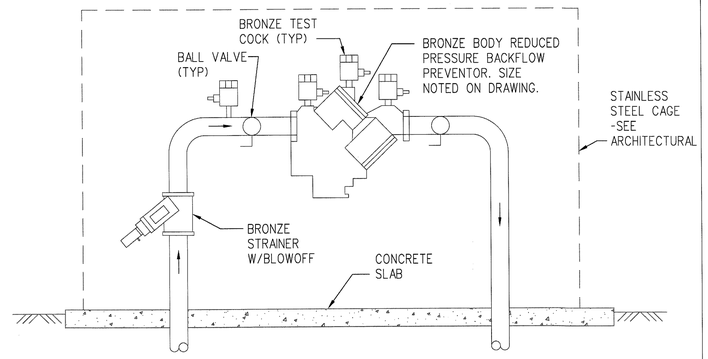

REDUCED PRESSURE BACKFLOW PREVENTOR DETAIL (3 / PL-CB-002)

NO SCALE

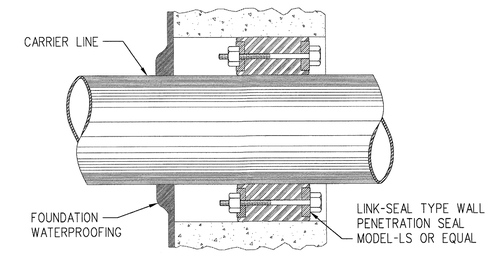

PIPE PENETRATION DETAIL (5 / PL-CB-002)

NO SCALE

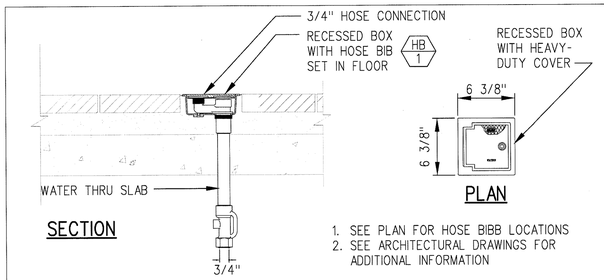

1. SEE PLAN FOR HOSE BIBB LOCATIONS
2. SEE ARCHITECTURAL DRAWINGS FOR ADDITIONAL INFORMATION

PLATFORM HOSE BIBB DETAIL (2 / PL-CB-002)

NO SCALE

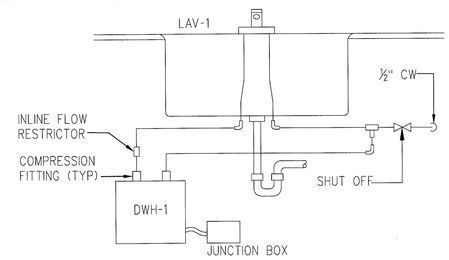

INSTANTANEOUS WATER HEATER DETAIL (4 / PL-CB-002)

NO SCALE

COLD WATER DEMAND CALCULATIONS

DESCRIPTION	QUANTITY	FIXTURE UNITS (EACH)	FIXTURE UNITS TOTAL
HOSE BIBB	1	2.5	2.5
EACH ADDITIONAL HOSE BIBB	5	1.0	5.0
LAVATORIES	2	1.0	2.0
WATER CLOSET - 1.6 GPF FLUSHOMETER	2	40 FOR 1ST + 30 FOR 2ND	70.0
		TOTAL	79.5

THE MAXIMUM DEVELOPED LENGTH = 500'.
THE MAXIMUM DIFFERENCE IN ELEVATION BETWEEN THE SOURCE OF SUPPLY AND THE HIGHEST WATER SUPPLY OUTLET = 25'. PRESSURE LOSS DUE TO ELEVATION CHANGE = 0.5 PSI/FT x 25 FT = 12.5 PSI.
REDUCED PRESSURE BACKFLOW PREVENTER PRESSURE LOSS = 10 PSI.
ASSUMING A STREET PRESSURE OF 55 PSI, PRESSURE = 55-12.5-10=32.5 PSI.
FROM TABLE 6-6 OF THE PLUMBING CODE, THE REQUIRED PIPE SIZE FOR 30 TO 45 PSI PRESSURE AT 500' PIPE LENGTH IS 2" WITH A MAXIMUM OF 96 FIXTURE UNITS.
THEREFORE 2" PIPE SIZE MEETS THE PLUMBING CODE REQUIREMENTS.

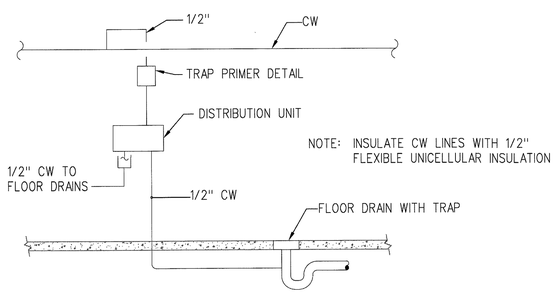

TRAP PRIMER DETAIL (6 / PL-CB-002)

NO SCALE

SRJV
JUN 24 2013
ISSUED FOR CONSTRUCTION

THE PREPARATION OF THIS DRAWING HAS BEEN FINANCED BY THE TAXES OF THE CITIZENS OF LOS ANGELES COUNTY AND OF THE STATE OF CALIFORNIA.

REV	DATE	BY	APP	REG NO	EXPIRES	SEAL HOLDER	DESCRIPTION
0	5/30/13	RG	RG	M33848	9/30/13	RONALD B. GOLAY	APPROVED FOR CONSTRUCTION

DESIGNED BY R.GOLAY
DRAWN BY R.GOLAY
CHECKED BY D.HAMILTON
IN CHARGE R.GOLAY
DATE 5/30/13

REGISTERED PROFESSIONAL ENGINEER — RONALD B. GOLAY — No. M33848 — Exp. 09-30-13 — MECHANICAL — STATE OF CALIFORNIA

Exposition Metro Line Construction Authority
Expo
Exposition Construction Authority Approved for Construction Drawings - AFC
JUN 21 2013

EXPO SKANSKA RADOS
444 South Flower Street
Suite 2200
Los Angeles, CA 90071
TEL (213) 443-7463
FAX (213) 362-9481

PARSONS BRINCKERHOFF

CURRENT STATUS

EXPOSITION LRT PROJECT- PHASE 2
PLUMBING
COMMON FOR 4TH ST STATION DETAILS

CONTRACT NO XP8902-002
DRAWING NO PL-CB-002
REV 0
SCALE NONE
SHEET NO

C:\projectwise\pb\projectwise\saintgolay\dms59\650\exp2-PL-CB-002.dwg
29-May-13 2:14 PM Golay, Ron

C:\projectwise\pb\projectwiseinfrogolay\dms\90860\aexpo2-PL-S7-101.dwg

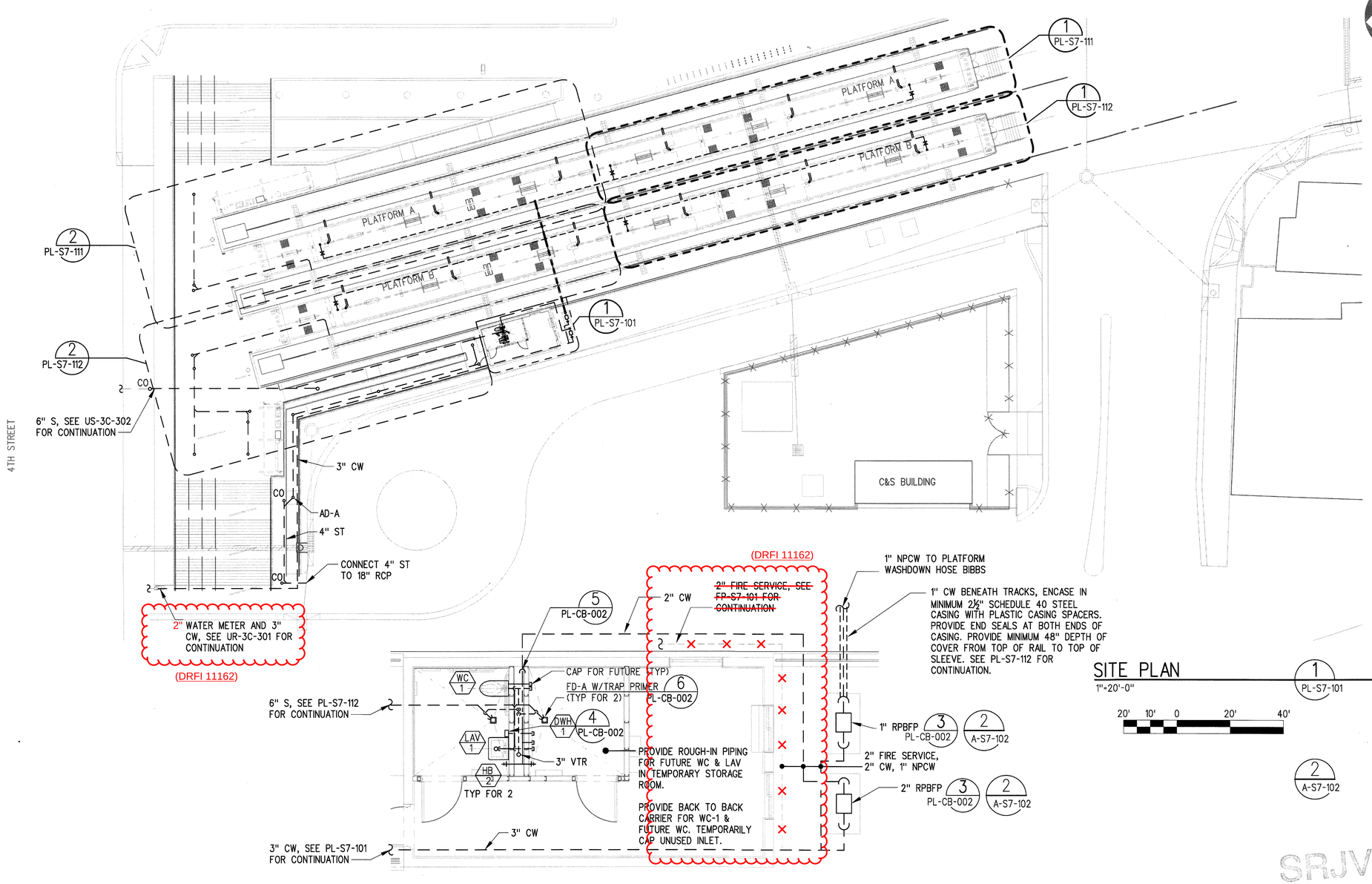

SITE PLAN

1"=20'-0"

1 PL-S7-101

20' 10' 0 20' 40'

2 A-S7-102

CONDUCTOR'S LOUNGE PLUMBING PLAN

1/4"=1'-0"

1 PL-S7-101

4' 2' 0 4' 8'

SRJV
JUN 24 2013
ISSUED FOR CONSTRUCTION

THE PREPARATION OF THIS DRAWING HAS BEEN FINANCED BY THE TAXES OF THE CITIZENS OF LOS ANGELES COUNTY AND OF THE STATE OF CALIFORNIA.

REV	DATE	BY	APP	REG NO	EXPIRES	SEAL HOLDER	DESCRIPTION
0	5/30/13	RG	RG	M33848	9/30/13	RONALD B. GOLAY	APPROVED FOR CONSTRUCTION

DESIGNED BY R.GOLAY
DRAWN BY R.GOLAY
CHECKED BY D.HAMILTON
IN CHARGE R.GOLAY
DATE 5/30/13

REGISTERED PROFESSIONAL ENGINEER — RONALD B. GOLAY — No. M33848 — Exp. 09-30-13 — MECHANICAL — STATE OF CALIFORNIA

Exposition Metro Line Construction Authority
Expo
Exposition Construction Authority Approved for Construction Drawings - AFC
JUN 21 2013

EXPO SKANSKA RADOS
444 South Flower Street
Suite 2200
Los Angeles, CA 90071
TEL (213) 443-7463
FAX (213) 362-9481

PARSONS BRINCKERHOFF

CURRENT STATUS

EXPOSITION LRT PROJECT- PHASE 2
COLORADO/4TH STREET STATION
SITE PLUMBING PLANS

CONTRACT NO XP8902-002
DRAWING NO PL-S7-101
REV 0
SCALE AS NOTED
SHEET NO

29-May-13 3:39 PM Golay, Ron

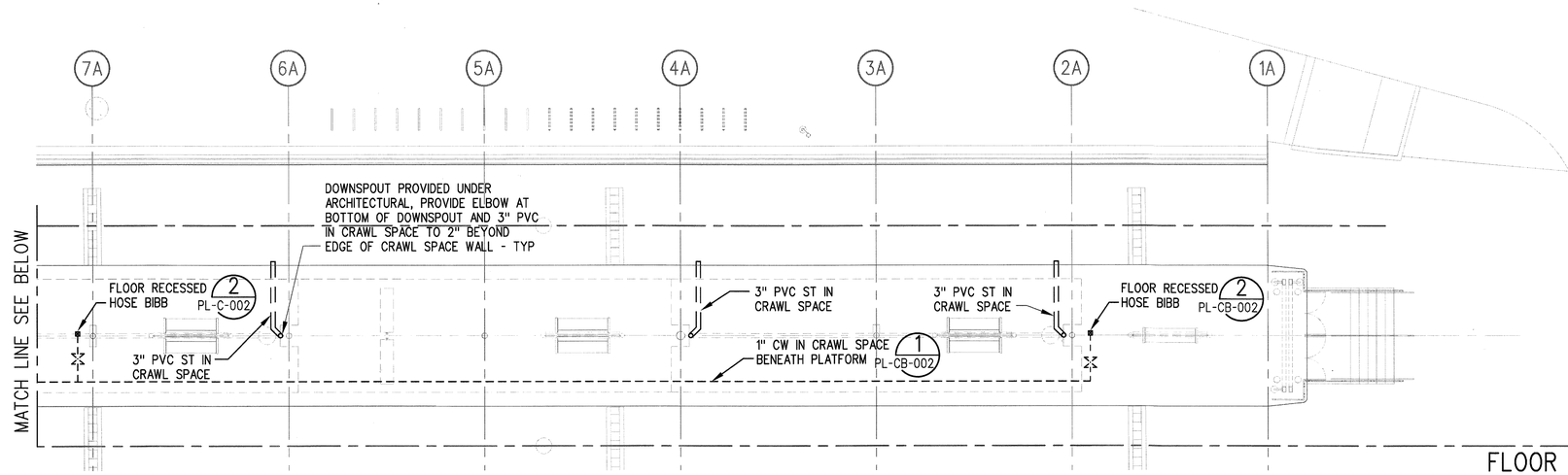

FLOOR PLAN PLATFORM A

1/8"=1'-0"

1 PL-S7-111

8' 4' 0 8' 16'

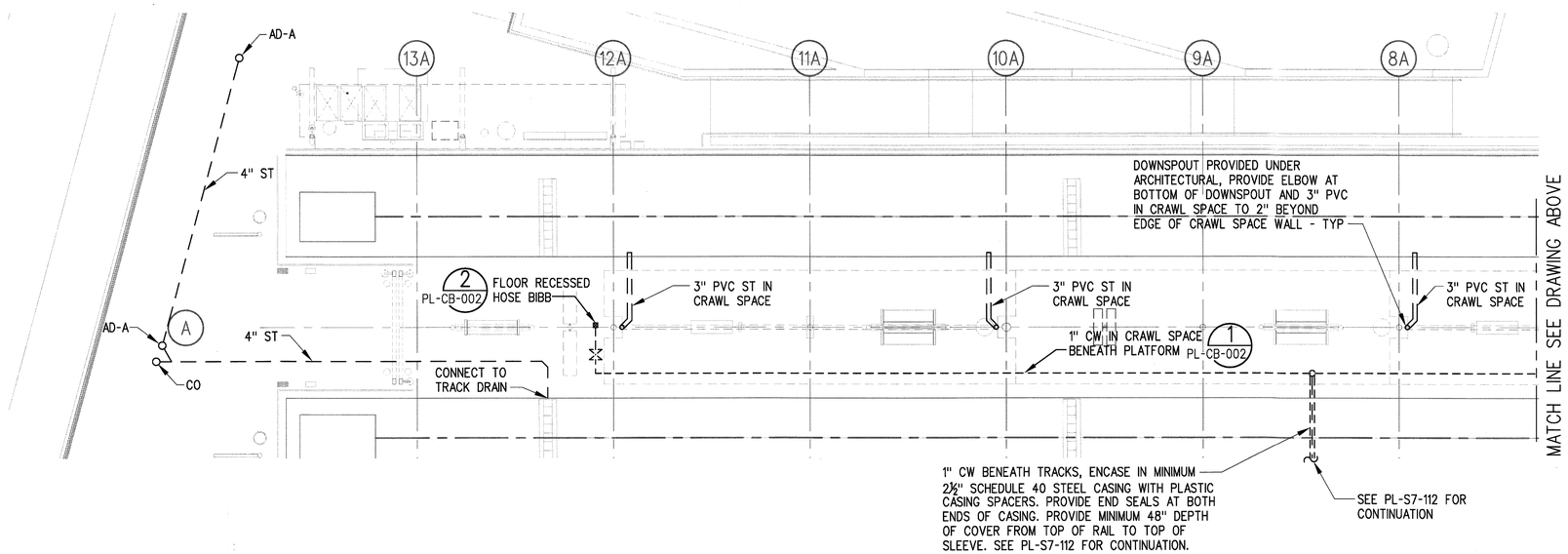

FLOOR PLAN PLATFORM A (CONT)

1/8"=1'-0"

2 PL-S7-111

8' 4' 0 8' 16'

SRJV
JUN 24 2013
ISSUED FOR CONSTRUCTION

THE PREPARATION OF THIS DRAWING HAS BEEN FINANCED BY THE TAXES OF THE CITIZENS OF LOS ANGELES COUNTY AND OF THE STATE OF CALIFORNIA.

REV	DATE	BY	APP	REG NO	EXPIRES	SEAL HOLDER	DESCRIPTION
0	5/30/13	RG	RG	M33848	9/30/13	RONALD B. GOLAY	APPROVED FOR CONSTRUCTION

DESIGNED BY R.GOLAY
DRAWN BY R.GOLAY
CHECKED BY D.HAMILTON
IN CHARGE R.GOLAY
DATE 5/30/13

REGISTERED PROFESSIONAL ENGINEER — RONALD B. GOLAY — No. M33848 — Exp. 09-30-13 — MECHANICAL — STATE OF CALIFORNIA

Exposition Metro Line Construction Authority
Expo

Exposition Construction Authority
Approved for Construction
Drawings - AFC

EXPO SKANSKA RADOS

444 South Flower Street
Suite 2200
Los Angeles, CA 90071
TEL (213) 443-7463
FAX (213) 362-9481

PARSONS BRINCKERHOFF

JUN 21 2013

CURRENT STATUS

EXPOSITION LRT PROJECT- PHASE 2
COLORADO/4TH STREET STATION
PLATFORM A PLUMBING PLAN

CONTRACT NO XP8902-002
DRAWING NO PL-S7-111
REV 0
SCALE 1/8" = 1'-0"
SHEET NO

C:\projectwise\pb\projectwise\mtgolay\dms\19060\aexpo2-PL-S7-111.dwg
29-May-13 3:40 PM Golay, Ron

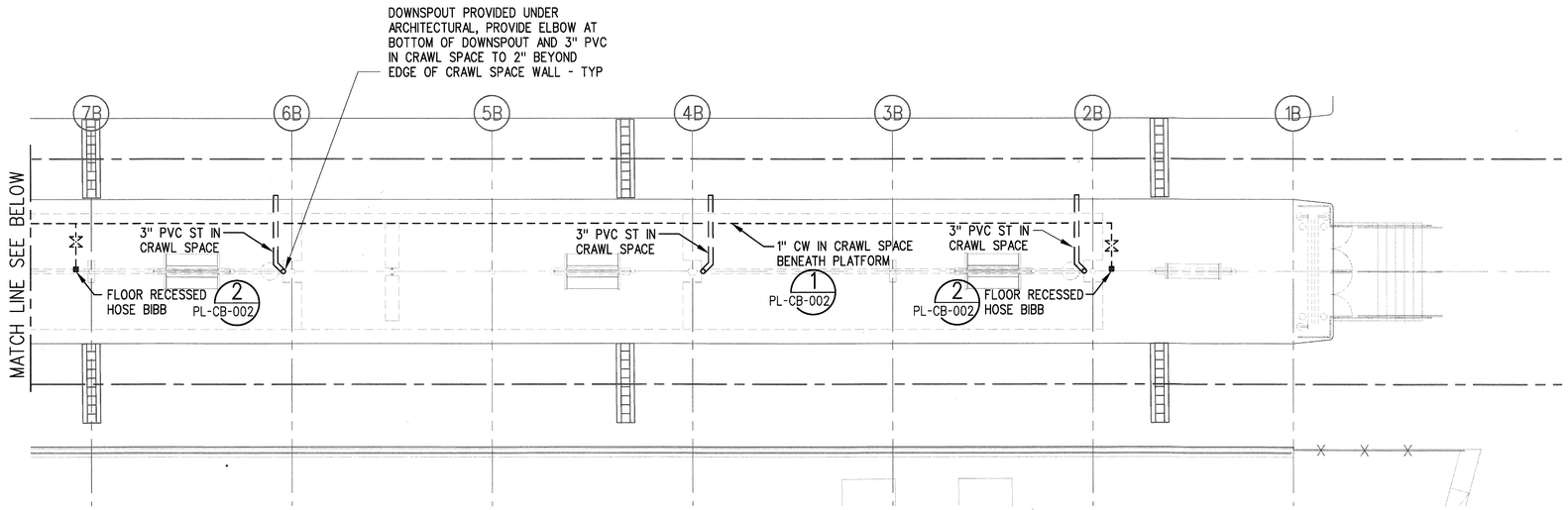

FLOOR PLAN
PLATFORM B
1/8"=1'-0"
1 PL-S7-112

8' 4' 0 8' 16'

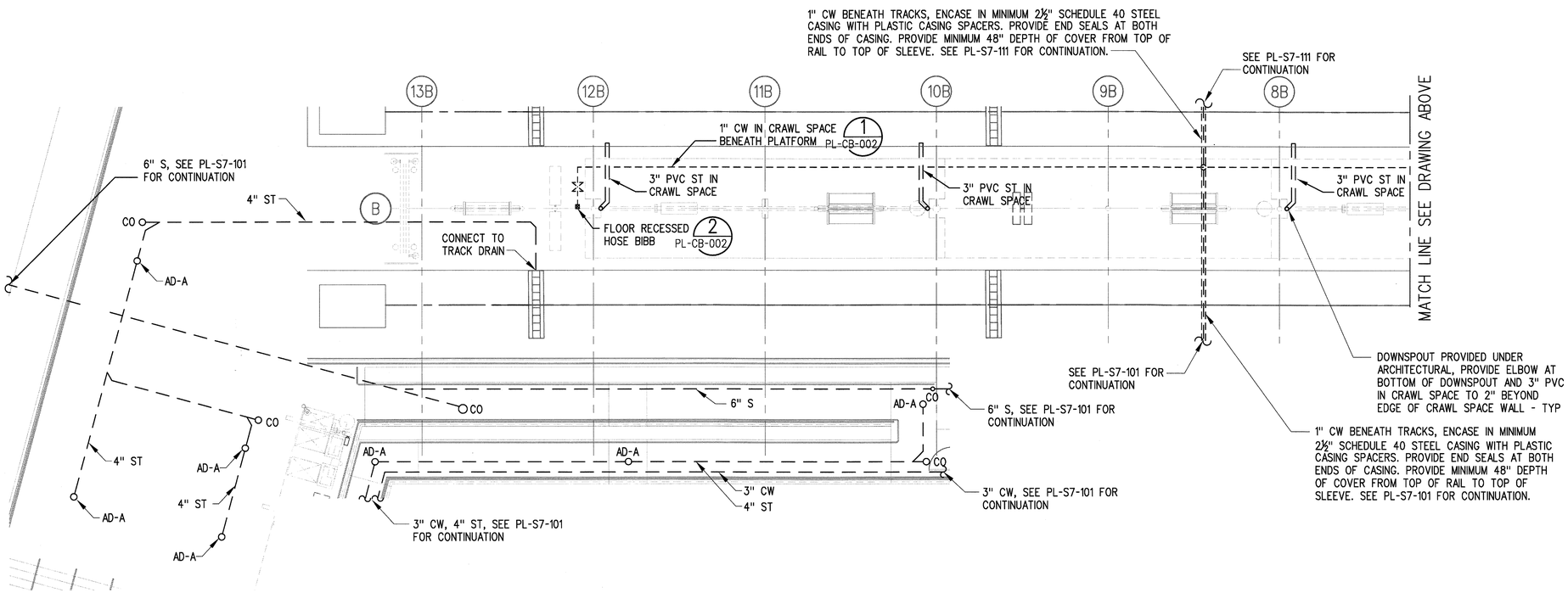

FLOOR PLAN
PLATFORM B (CONT)
1/8"=1'-0"
2 PL-S7-112

8' 4' 0 8' 16'

SRJV
JUN 24 2013
ISSUED FOR CONSTRUCTION

THE PREPARATION OF THIS DRAWING HAS BEEN FINANCED BY THE TAXES OF THE CITIZENS OF LOS ANGELES COUNTY AND OF THE STATE OF CALIFORNIA.

REV	DATE	BY	APP	REG NO	EXPIRES	SEAL HOLDER	DESCRIPTION
0	5/30/13	RG	RG	M33848	9/30/13	RONALD B. GOLAY	APPROVED FOR CONSTRUCTION

DESIGNED BY R.GOLAY
DRAWN BY R.GOLAY
CHECKED BY D.HAMILTON
IN CHARGE R.GOLAY
DATE 5/30/13

REGISTERED PROFESSIONAL ENGINEER — RONALD B. GOLAY — No. M33848 — Exp. 09-30-13 — MECHANICAL — STATE OF CALIFORNIA

Exposition Metro Line Construction Authority
Expo
Exposition Construction Authority Approved for Construction Drawings - AFC
JUN 21 2013

EXPO SKANSKA RADOS

444 South Flower Street
Suite 2200
Los Angeles, CA 90071
TEL (213) 443-7463
FAX (213) 362-9481

PARSONS BRINCKERHOFF

CURRENT STATUS

EXPOSITION LRT PROJECT- PHASE 2
COLORADO/4TH STREET STATION
PLATFORM B PLUMBING PLAN

CONTRACT NO XP8902-002
DRAWING NO PL-S7-112
REV 0
SCALE 1/8" = 1'-0"
SHEET NO

C:\projectwise\pb\projectwiseintlgolay\dms09060\expo2-PL-S7-112.dwg
29-May-13 3:40 PM Golay, Ron

ABBREVIATIONS AND LEGEND

FIRE PROTECTION ABBREVIATIONS

ACV	SPRINKLER WET ALARM CONTROL VALVE
AP	ACCESS PANEL OR DOOR
DIA	DIAMETER
DCDBFP	DOUBLE CHECK DETECTOR BACKLFLOW PREVENTER
EC	ELECTRICAL SUBCONTRACTOR
FDC	FIRE DEPARTMENT CONNECTION
FDV	FIRE DEPARTMENT VALVE
FHC	FIRE HOSE CABINET
FS	FLOW SWITCH
FT	FEET
GPM	GALLONS PER MINUTE
LOW	LIMIT OF WORK
OS&Y	OUTISIDE SCREW & YOKE
PC	PLUMBING SUBCONTRACTOR
PSP	PRE-ACTION SPRINKLER
PSI	POUNDS PER SQUARE INCH
SP	WET SPRINKLER
SCH	SCHEDULE
TDC	TEST DRAIN CONNECTION
TDH	TOTAL DYNAMIC HEAD
TS	TAMPER SWITCH
TYP	TYPICAL
ST	STAND PIPE
W/	WITH
WSP	WET STANDPIPE

FIRE PROTECTION LEGEND

—WSP—	WET STANDPIPE SYSTEM PIPING
— SP —	WET PIPE SPRINKLER PIPING
—PSP—	PRE-ACTION SPRINKLER PIPING
	UPRIGHT SPRINKLER HEAD
	PENDANT SPRINKLER HEAD
	SIDEWALL SPRINKLER HEAD
	CHECK VALVE
	GATE VALVE
	PRESSURE GAUGE
	RISER DOWN
	BRANCH-TOP CONNECTION
	BRANCH-BOTTOM CONNECTION
	CAP ON END OF PIPE
	UNION
	FLANGE
	STRAINER
	DIRECTION OF FLOW
TS	OS&Y VALVE W/TAMPER SWITCH STAND PIPE WITH FIRE DEPARTMENT VALVE
FHC	FIRE HOSE CABINET
	UNDERGROUND VALVE
ACV	SPRINKLER WET ALARM CONTROL VALVE
FDC	FIRE DEPARTMENT CONNECTION
FS	WATER FLOW SWITCH
M	WATER METER

SYMBOLS

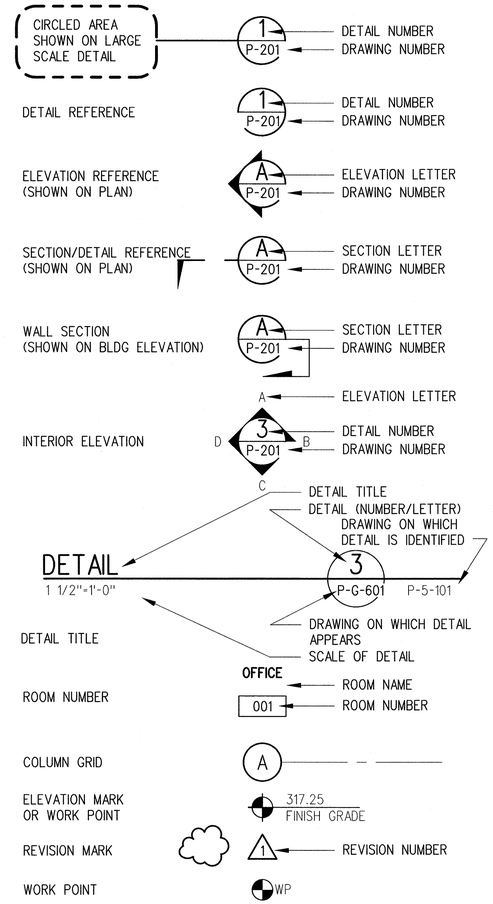

GENERAL NOTES

FIRE PROTECTION NOTES

1. INTENT: THE INTENT OF THE DRAWINGS IS TO PROVIDE THAT THE WORK AND ALL PARTS THEREOF SHALL BE, WHEN FULLY COMPLETED, SUITABLE IN EVERY WAY FOR THE PURPOSES FOR WHICH IT IS INTENDED. PROVIDE ALL MATERIALS AND LABOR NECESSARY TO MAKE THE SYSTEM FULLY OPERABLE AND IN COMPLIANCE WITH ALL APPLICABLE CODES. WORK SHALL BE IN ACCORDANCE WITH THE LATEST EDITION OF THE STATE BUILDING CODE, LOCAL AMENDMENTS AND THE REFERENCED NATIONAL FIRE PROTECTION ASSOCIATION CODES INCLUDING NFPA 13.

2. DRAWINGS: THE DRAWINGS ARE SCHEMATIC REPRESENTATIONS OF THE WORK TO BE DONE. THE SPRINKLER CONTRACTOR SHALL BE RESPONSIBLE FOR DOING HYDRAULIC CALCULATIONS AND PREPARING WORKING DRAWINGS SHOWING ACTUAL SIZE AND LOCATIONS OF ALL WORK.

3. COORDINATION: COORDINATE ALL WORK AND WORK SCHEDULES WITH THAT OF OTHER TRADES AFFECTED BY THE ENTIRE SCOPE OF THE PROJECT SO THAT ALL WORK MAY BE INSTALLED IN THE MOST DIRECT AND WORKMANLIKE MANNER AND SO THAT INTERFERENCE WITH DUCTWORK, PIPING, EQUIPMENT, ELECTRICAL, ARCHITECTURAL AND STRUCTURAL COMPONENTS AND OTHER WORK IS AVOIDED.

4. INSTALLATION SHALL PERMIT ACCESSIBILITY FOR SERVICE OR REPLACEMENT. COORDINATE INSTALLATION OF ALL EQUIPMENT AND COMPONENTS FOR ACCESSIBILITY TO MEET MANUFACTURER SUGGESTED CLEARANCES AROUND EQUIPMENT FOR MAINTENANCE AND REPAIR. THE INSTALLATION OF BUILDING MATERIALS AND COMPONENTS SHALL ALLOW SUFFICIENT SPACE FOR MAINTENANCE AND SERVICE WITHOUT LIMITED RANGE OF MOTION THAT WOULD REQUIRE DECONSTRUCTION OF THE SPACE OR INSTALLATION TO PROVIDE THE REQUIRED SERVICE.

5. WHEREVER THE REQUIREMENTS AND REGULATIONS OF FEDERAL OR STATE ARE MORE STRINGENT THAN THE REQUIREMENTS INDICATED ON THE DRAWINGS OR SPECIFICATIONS, THEY SHALL TAKE PRECEDENCE OVER THE DRAWINGS OR SPECIFICATIONS AND SHALL BE MADE PART OF THE CONTRACT. HOWEVER WHERE THE DRAWINGS OR SPECIFICATIONS ARE MORE STRINGENT THAN FEDERAL OR STATE AUTHORITY REQUIREMENTS AND REGULATION, THE MORE STRINGENT SHALL APPLY.

6. ALL EQUIPMENT AND MATERIALS FURNISHED UNDER THE FIRE PROTECTION SUBCONTRACT, LABOR AND TESTING PERFORMED HEREIN SHALL BE IN COMPLETE ACCORDANCE WITH THE CALIFORNIA STATE BUILDING CODE, THE FIRE/LIFE SAFETY COMMITTEE, THE NATIONAL FIRE PROTECTION ASSOCIATION, INSURANCE REGULATIONS AND REQUIREMENTS GOVERNING SUCH WORK.

7. THE SPRINKLER CONTRACTOR SHALL PREPARE WORKING DRAWINGS OF THE SPRINKLER WORK AND OBTAIN APPROVALS FORM THE FIRE/LIFE SAFETY COMMITTEE, LOCAL FIRE DEPARTMENT, BUILDING DEPARTMENT. OWNER'S INSURANCE AGENT AND ARCHITECT PRIOR TO INSTALLATION. SUBMIT TO ARCHITECT ONLY AFTER APPROVAL BY OTHER AUTHORITIES. WORKING DRAWINGS SHALL BE STAMPED BY A CALIFORNIA REGISTERED PROFESSIONAL FIRE PROTECTION ENGINEER.

8. PIPE ROUTING AND SPRINKLER LOCATIONS ARE FOR GENERAL REFERENCE ONLY. ACTUAL ROUTING OF SPRINKLER MAINS AND BRANCHES AND LOCATION OF SPRINKLERS SHALL BE THOROUGHLY COORDINATED WITH OTHER TRADES AND BUILDING STRUCTURE PRIOR TO SUBMISSION OF COORDINATED WORKING DRAWINGS. ALL CEILING HEIGHTS INDICATED ARE APPROXIMATE. THIS CONTRACTOR SHALL BE RESPONSIBLE FOR VERIFYING ALL NECESSARY MEASUREMENT REQUIRED FOR PRODUCING HIS WORKING DRAWINGS.

8. SEE TYPICAL TRENCH DETAIL ON THE WATER RELOCATION DRAWINGS FOR PIPE DEPTH AND TRENCHING AND BACKFILLING REQUIREMENTS.

9. SEE TYPICAL TRENCH DETAIL ON THE WATER RELOCATION DRAWINGS FOR PIPE DEPTH AND TRENCHING AND BACKFILLING REQUIREMENTS.

10. ALL PIPING SHALL BE PROTECTED AGAINST DAMAGE FROM EARTHQUAKES. EARTHQUAKE PROTECTION SHALL BE IN ACCORDANCE WITH THE LATEST EDITION OF APPLICABLE LOCAL CODES AND NFPA 13.

10. WHERE APPLICABLE, REFER TO ARCHITECTURAL REFLECTED CEILING PLANS FOR EXACT LOCATIONS OF SPRINKLER HEADS.

11. SPRINKLER HEADS IN AREAS WITH NO FINISHED CEILING SHALL BE UPRIGHT TYPE, LOCATED AS HIGH AS POSSIBLE. IN AREAS WITH FINISHED CEILING, SPRINKLER HEADS IN AREAS WITH FINISHED CEILINGS SHALL BE CONCEALED PENDANT TYPE WITH WHITE COVER PLATE.

12 WORK SHALL BE PROPERLY AND EFFECTIVELY PROTECTED AND PIPE OPENINGS SHALL BE TEMPORARILY CLOSED TO PREVENT OBSTRUCTION AND DAMAGE BEFORE COMPLETION.

13. ALL ELEMENTS OF WORK ARE TO BE CONSIDERED NEW UNLESS INDICATED EXISTING OR RELOCATED

14. ALL SPRINKLER HEADS SHALL BE INSTALLED CENTER OF TILE.

15. ALL OPENINGS WHERE PIPES PENETRATE FLOOR, WALLS AND ROOFS SHALL BE SEALED TO PREVENT AIR AND MOISTURE MOVEMENT.

16. SEAL ALL OPENINGS WHERE PIPES PENETRATE SLABS AND WALLS TO PREVENT AIR AND MOISTURE FLOW BETWEEN SPACES AND FROM OUTSIDE TO INSIDE OF BUILDING. USE UL APPROVED MATERIALS AND ASSEMBLIES TO SEAL OPENINGS IN RATED WALLS.

17. STANDPIPE PIPING AND EQUIPMENT SHALL MEET THE REQUIREMENTS SET FORTH IN NFPA 14.

18. ALARM DEVICES SHALL BE PROVIDED UNDER THIS SECTION, SUPERVISION SHALL BE THROUGH THE STATION FIRE ALARM CONTROL PANEL.

SRJV
MAR 01 2013
ISSUED FOR CONSTRUCTION

THE PREPARATION OF THIS DRAWING HAS BEEN FINANCED BY THE TAXES OF THE CITIZENS OF LOS ANGELES COUNTY AND OF THE STATE OF CALIFORNIA.

REV	DATE	BY	APP	REG NO	EXPIRES	SEAL HOLDER	DESCRIPTION
0	2/8/13	RG	RG	M33848	9/30/13	RONALD B. GOLAY	APPROVED FOR CONSTRUCTION

DESIGNED BY R.GOLAY
DRAWN BY R.GOLAY
CHECKED BY D.HAMILTON
IN CHARGE R.GOLAY
DATE 2/8/13

REGISTERED PROFESSIONAL ENGINEER — RONALD B. GOLAY — No. M33848 — Exp. 09-30-13 — MECHANICAL — STATE OF CALIFORNIA

Exposition Metro Line Construction Authority
Expo
EXPO SKANSKA RADOS
444 South Flower Street
Suite 2200
Los Angeles, CA 90071
TEL (213) 443-7463
FAX (213) 362-9481
PARSONS BRINCKERHOFF

Exposition Construction Authority Approved for Construction Drawings - AFC
MAR 01 2013
CURRENT STATUS

EXPOSITION LRT PROJECT- PHASE 2
FIRE PROTECTION
COMMON
ABBREVIATION, LEGEND, SYMBOLS AND GENERAL NOTES

CONTRACT NO XP8902-002
DRAWING NO FP-C-001
REV 0
SCALE NONE
SHEET NO

C:\projectwise\pb\projectwiseinfo\playdms69060\expo2-FP-C-001.dwg
8-Feb-13 7:43 AM Golay, Ron

FIRE PROTECTION DESIGN CRITERIA

INDICATED BUILDINGS SHALL BE 100% SPRINKLED USING A WET PIPE OR PRE-ACTION SPRINKLER SYSTEM AS INDICATED.

ALL AREAS SHALL BE DESIGNED TO ORDINARY HAZARD, GROUP 1 REQUIREMENTS AND SHALL PROVIDE 0.15 GPM/SF OVER THE HYDRAULICALLY MOST REMOTE 1500 SF AREA. HOSE ALLOWANCE SHALL BE 250 GPM. MAXIMUM SPRINKLER COVERAGE SHALL BE 130 SF.

SPRINKLER CONTRACTOR SHALL BE RESPONSIBLE FOR PERFORMING HYDRAULIC ANALYSIS AND PREPARING WORKING DRAWINGS IN ACCORDANCE WITH APPLICABLE NFPA STANDARDS. SUBMIT DESIGN CRITERIA, HYDRAULIC CALCULATIONS AND WORKING DRAWINGS FOR REVIEW AND APPROVAL PRIOR TO START OF CONSTRUCTION.

SPRINKLER CONTRACTOR SHALL EITHER OBTAIN HYDRANT FLOW TEST DATA FOR EACH STATION CURRENT TO WITHIN ONE YEAR OF THE DATE OF SYSTEM INSTALLATION OR CONDUCT HYDRANT FLOW TESTS AT EACH STATION TO OBTAIN DATA NECESSARY FOR THE HYDRAULIC ANALYSIS OF THE SYSTEM.

THE SYSTEMS SHALL BE DESIGNED SO THAT A MINIMUM 10 PSI REMAINING PRESSURE IS PROVIDED FOR ALL SYSTEM.

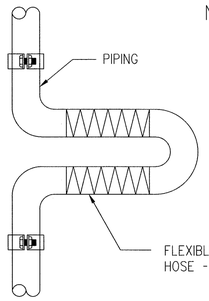

NOTES:

1. PROVIDE WHEREVER WHEREVER PIPING CROSSES A SEISMIC OR THERMAL EXPANSION JOINT.
2. SEE STRUCTURAL DRAWINGS FOR ADDITIONAL INFORMATION.

PIPING AT EXPANSION JOINT (5)
NO SCALE — BUNDY & SEPULVEDA STATIONS — FP-C-002

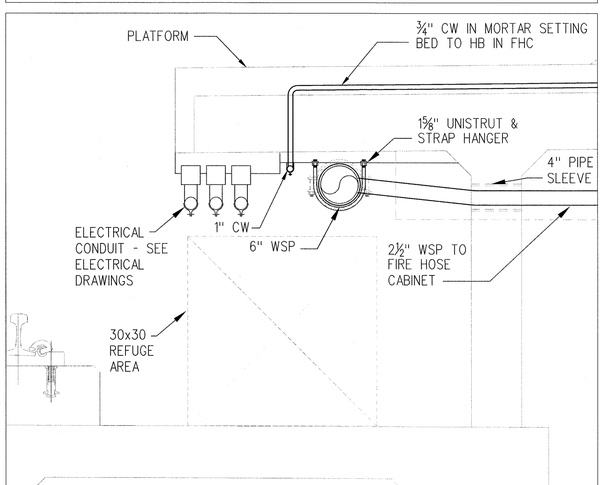

PIPING AT PLATFORM OVERHANGS (6)
NO SCALE — BUNDY & SEPULVEDA STATIONS — FP-C-002

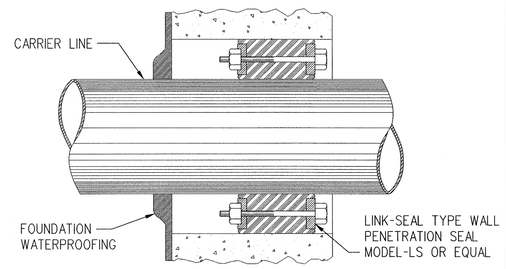

PIPE PENETRATION DETAIL (1)
NO SCALE — FP-C-002

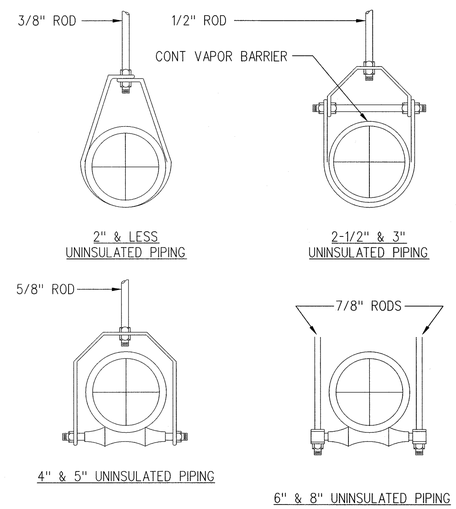

NOTES:

RODS, HANGERS, FASTENERS, SADDLES AND ALL OTHER COMPONENTS SHALL BE HOT DIPPED GALVANIZED STEEL. COMPONENTS NOT AVAILABLE AS HOT DIPPED GALVANIZED STEEL SHALL BE ELECTRO GALVANIZED.

SEE PIPING AT PLATFORM OVERHANGS DETAIL THIS SHEET FOR SUPPORT OF 6" WSP PIPING AT PLATFORM OVERHANG.

PIPE HANGER DETAIL (3)
NO SCALE — FP-C-002

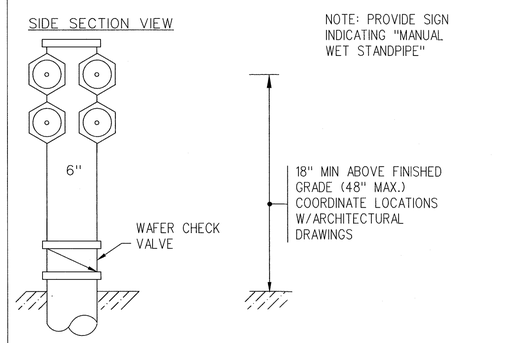

NOTE: PROVIDE SIGN INDICATING "MANUAL WET STANDPIPE"

FIRE DEPT CONN DETAIL (2)
NO SCALE — NATIONAL/PALMS STATION — FP-C-002

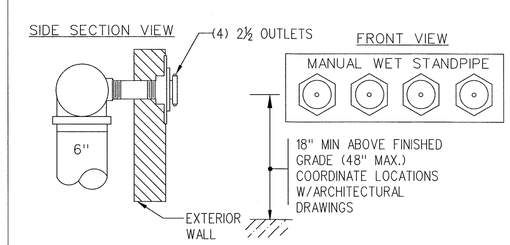

FIRE DEPT CONN DETAIL (2)
NO SCALE — BUNDY/SEPULVEDA STATIONS — FP-C-002

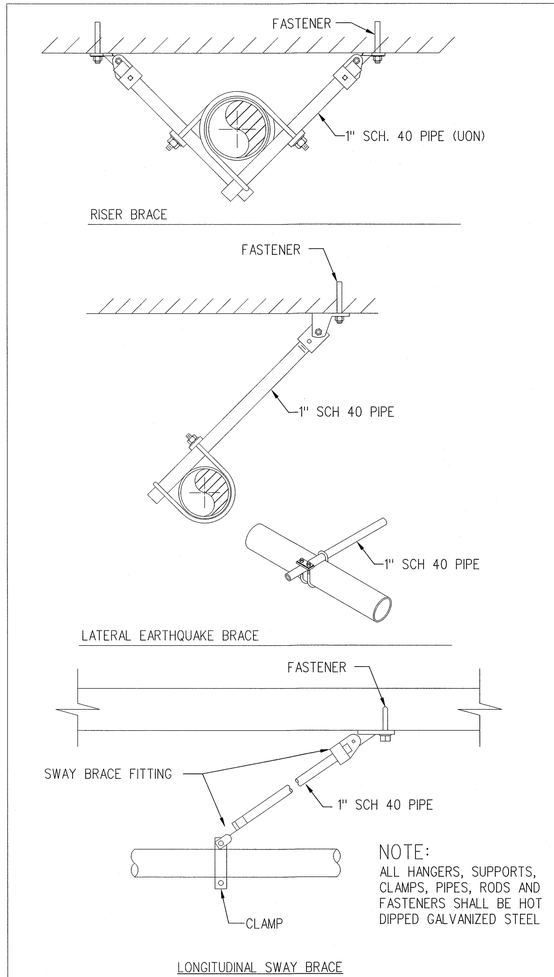

NOTE:
ALL HANGERS, SUPPORTS, CLAMPS, PIPES, RODS AND FASTENERS SHALL BE HOT DIPPED GALVANIZED STEEL

SWAY BRACE DETAIL (4)
NO SCALE — FP-C-002

SRJV
MAR 01 2013
ISSUED FOR CONSTRUCTION

THE PREPARATION OF THIS DRAWING HAS BEEN FINANCED BY THE TAXES OF THE CITIZENS OF LOS ANGELES COUNTY AND OF THE STATE OF CALIFORNIA.

REV	DATE	BY	APP	REG NO	EXPIRES	SEAL HOLDER	DESCRIPTION
0	2/8/13	RG	RG	M33848	9/30/13	RONALD B. GOLAY	APPROVED FOR CONSTRUCTION

DESIGNED BY R.GOLAY
DRAWN BY R.GOLAY
CHECKED BY D.HAMILTON
IN CHARGE R.GOLAY
DATE 2/8/13

REGISTERED PROFESSIONAL ENGINEER — RONALD B. GOLAY — No. M33848 — Exp. 09-30-13 — MECHANICAL — STATE OF CALIFORNIA

Exposition Metro Line Construction Authority
Expo
Exposition Construction Authority Approved for Construction Drawings - AFC
MAR 01 2013

EXPO SKANSKA RADOS
444 South Flower Street
Suite 2200
Los Angeles, CA 90071
TEL (213) 443-7463
FAX (213) 362-9481

PARSONS BRINCKERHOFF

CURRENT STATUS

EXPOSITION LRT PROJECT- PHASE 2
FIRE PROTECTION
COMMON
DETAILS

CONTRACT NO XP8902-002
DRAWING NO FP-C-002
REV 0
SCALE NONE
SHEET NO

C:\projectwise\pb\projectwiseintlgolay\dms69060\expo2-FP-C-002.dwg
8-Feb-13 7:46 AM Golay

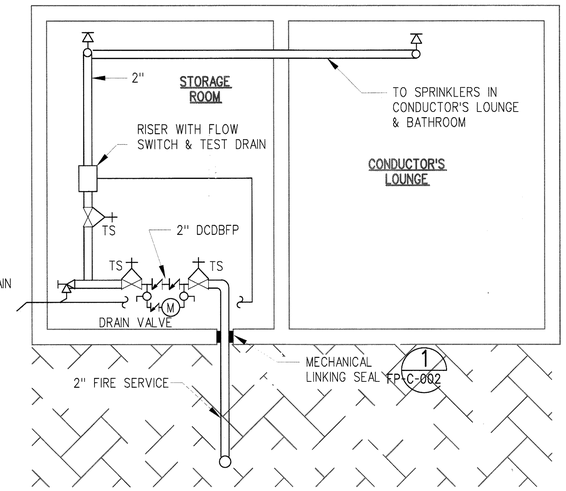

NOTE: SIZES INDICATED ARE PRELIMINARY. FINAL SIZES SHALL BE DETERMINED AND PROVIDED BY SPRINKLER SUBCONTRACTOR BASED ON HYDRAULIC ANALYSIS WHICH SHALL BE PERFORMED BY SPRINKLER CONTRACTOR.

COLORADO/4TH ST SPRINKLER SYSTEM

NO SCALE

2 / PF-S7-101

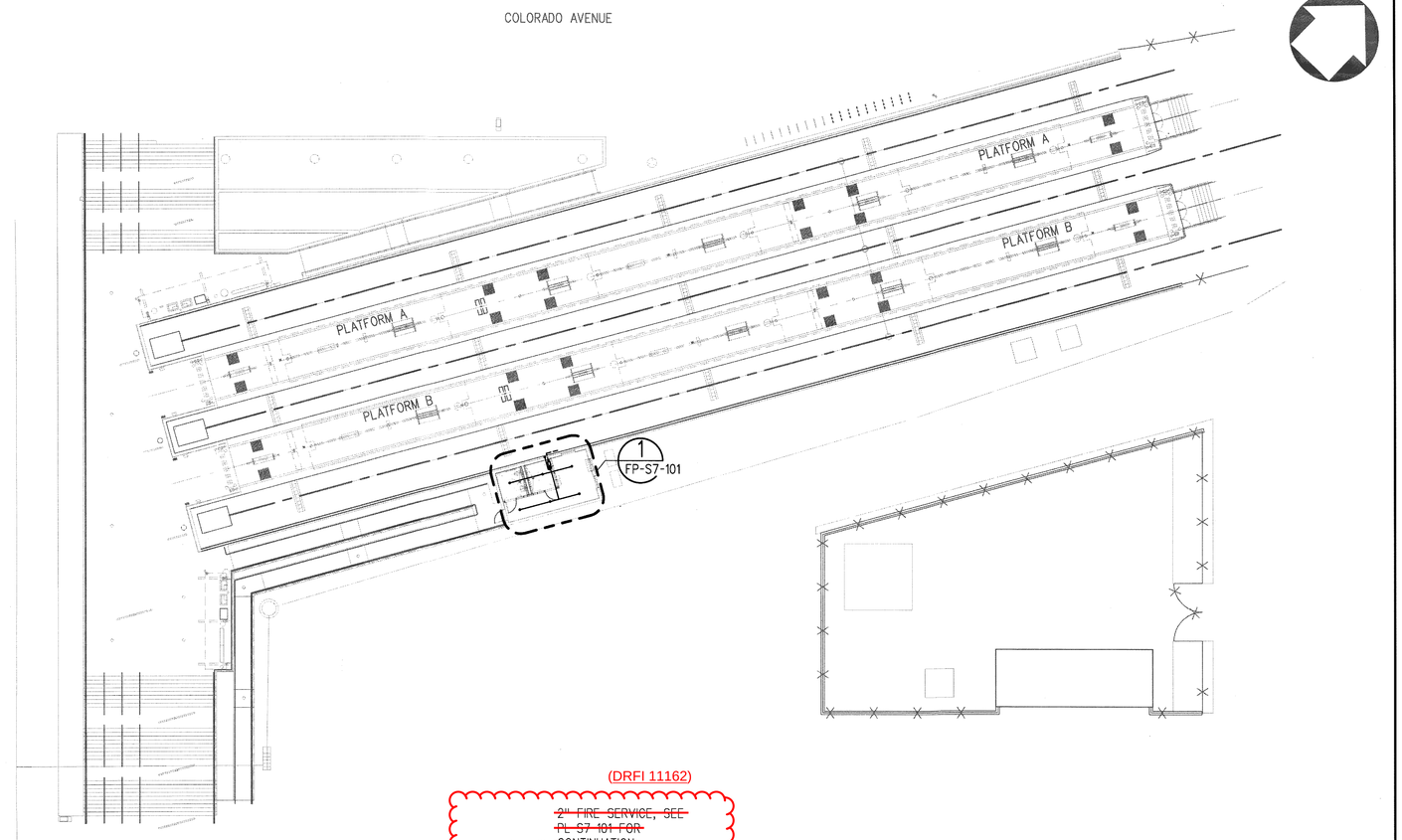

SITE PLAN

1"=20'-0"

1 / FP-S7-101

20' 10' 0 20' 40'

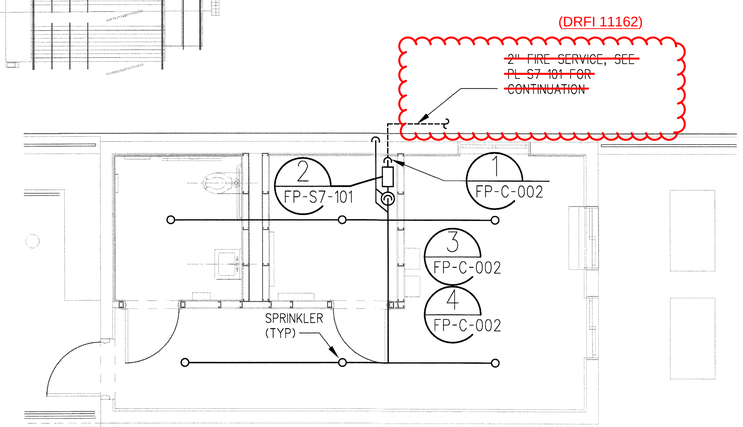

CONDUCTOR'S LOUNGE FIRE PROTECTION PLAN

1/4"=1'-0"

1 / FP-S7-101

4' 2' 0 4' 8'

SRJV
JUN 24 2013
ISSUED FOR CONSTRUCTION

THE PREPARATION OF THIS DRAWING HAS BEEN FINANCED BY THE TAXES OF THE CITIZENS OF LOS ANGELES COUNTY AND OF THE STATE OF CALIFORNIA.

REV	DATE	BY	APP	REG NO	EXPIRES	SEAL HOLDER	DESCRIPTION
0	5/30/13	RG	RG	M33848	9/30/13	RONALD B. GOLAY	APPROVED FOR CONSTRUCTION

DESIGNED BY R.GOLAY
DRAWN BY R.GOLAY
CHECKED BY D.HAMILTON
IN CHARGE R.GOLAY
DATE 5/30/13

REGISTERED PROFESSIONAL ENGINEER — RONALD B. GOLAY — No. M33848 — Exp. 09-30-13 — MECHANICAL — STATE OF CALIFORNIA

Exposition Metro Line Construction Authority
Expo

Exposition Construction Authority
Approved for Construction
Drawings - AFC

EXPO SKANSKA RADOS

444 South Flower Street
Suite 2200
Los Angeles, CA 90071
TEL (213) 443-7463
FAX (213) 362-9481

PARSONS BRINCKERHOFF

JUN 21 2013

CURRENT STATUS

EXPOSITION LRT PROJECT- PHASE 2
COLORADO/4TH STREET STATION
FIRE PROTECTION PLANS

CONTRACT NO XP8902-002
DRAWING NO FP-S7-101
REV 0
SCALE AS NOTED
SHEET NO

C:\projectwise\pb\projectwiseinfo\pw\dms08060\expo2-FP-S7-101.dwg
29-May-13
4:01 PM
Golay, Ron

J:\ACAD\WIN\11-13 Expo Phase 2 Design\Colorado-4th Street Station\Expo2 Colorado-4th Fire Protection Design R5.dwg

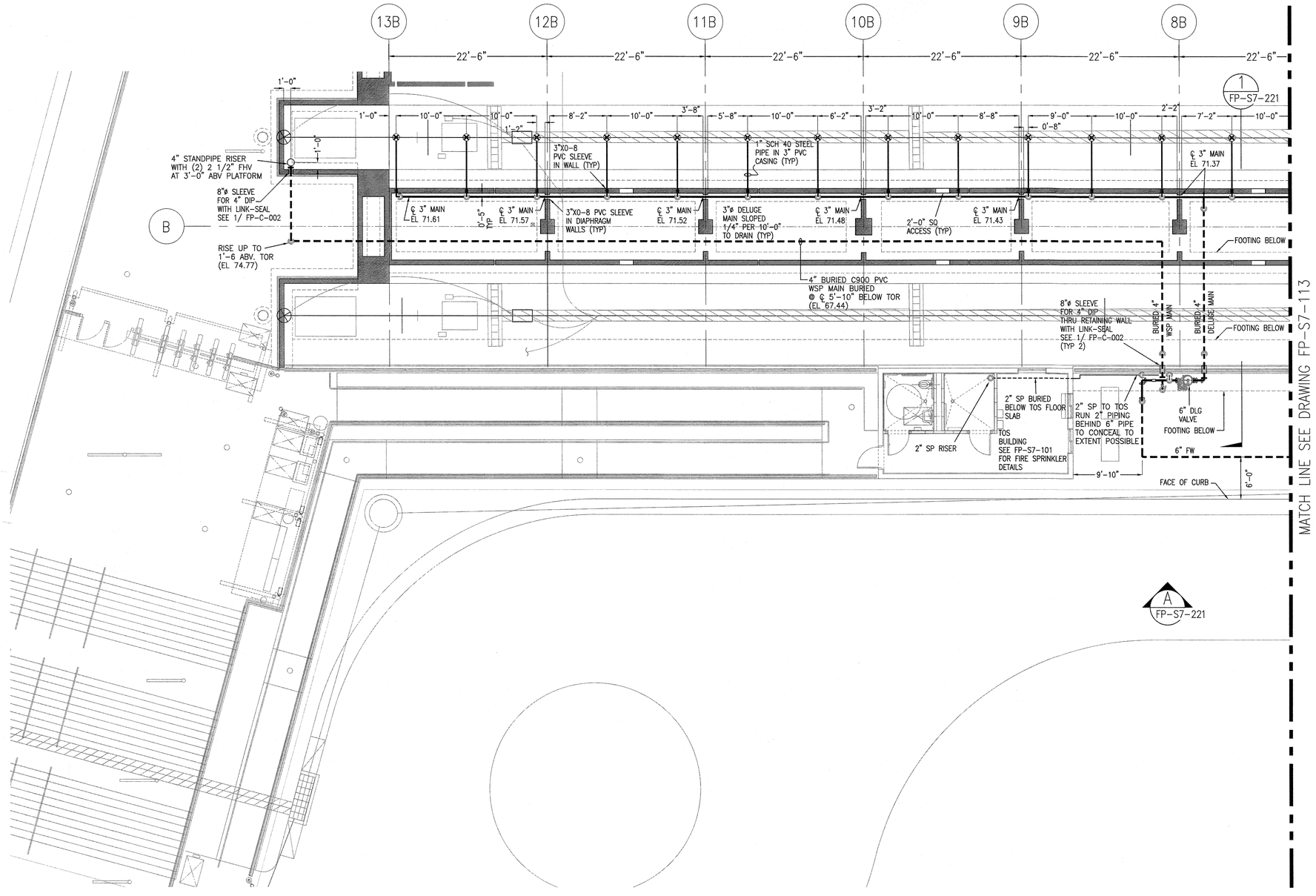

SRJV
APR 18 2014
ISSUED FOR CONSTRUCTION

FOUNDATION PLAN
PLATFORM B (WEST)
1/8"=1'-0"

2 FP-S7-112

8' 4' 0 8' 16'

Exposition Construction Authority
Approved for Construction
Drawings - AFC
APR 16 2014

THE PREPARATION OF THIS DRAWING HAS BEEN FINANCED BY THE TAXES OF THE CITIZENS OF LOS ANGELES COUNTY AND OF THE STATE OF CALIFORNIA.

REV	DATE	BY	APP	REG NO	EXPIRES	SEAL HOLDER	DESCRIPTION
0	10/7/13	DL	GP	FP 693	12/31/13	GEORGE PROVENCHER	ECI 43

DESIGNED BY R. BRAMEN
DRAWN BY R. BRAMEN
CHECKED BY D. LINK
IN CHARGE G. PROVENCHER
DATE 10/7/13

REGISTERED PROFESSIONAL ENGINEER GEORGE PROVENCHER FP 693 Exp 12-31-13 FIRE PROTECTION STATE OF CALIFORNIA 04/14/14

Exposition Metro Line Construction Authority
Expo

EXPO SKANSKA RADOS

444 South Flower Street
Suite 2200
Los Angeles, CA 90071
TEL (213) 443-7463
FAX (213) 362-9481

LINK - NILSEN CORPORATION
130 E. SANTA CLARA ST.
ARCADIA, CA 91006
LIC # C16 - 275562 PH# 626-445-3414

CURRENT STATUS

EXPOSITION LRT PROJECT- PHASE 2
COLORADO/4TH STREET STATION
FIRE PROTECTION - PLATFORM B
UNDERCAR DELUGE & STANDPIPE PLAN

CONTRACT NO XP8902-002
DRAWING NO FP-S7-112
REV 0
SCALE 1/8"=1'-0"
SHEET NO

14-Apr-14 1:50 PM Ryan Bramen

J:\ACAD\WIN\11-13 Expo Phase 2 Design\Colorado-4th Street Station\Expo2 Colorado-4th Fire Protection Design R5.dwg

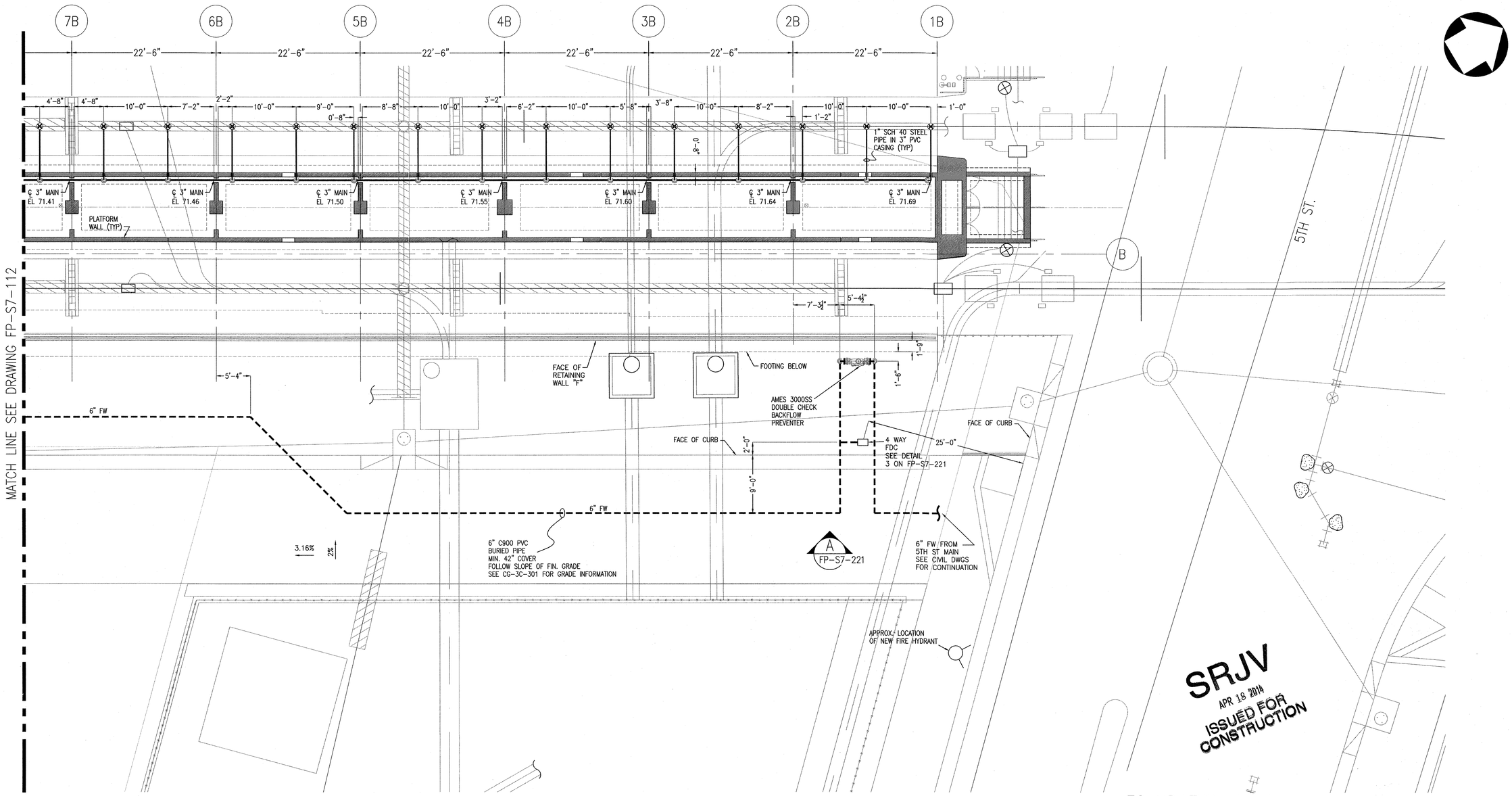

FOUNDATION PLAN
PLATFORM B (EAST)
1/8"=1'-0"

1
FP-S7-113

8' 4' 0 8' 16'

Exposition Construction Authority
Approved for Construction
Drawings - AFC
APR 16 2014

THE PREPARATION OF THIS DRAWING HAS BEEN FINANCED BY THE TAXES OF THE CITIZENS OF LOS ANGELES COUNTY AND OF THE STATE OF CALIFORNIA.

REV	DATE	BY	APP	REG NO	EXPIRES	SEAL HOLDER	DESCRIPTION
0	10/7/13	DL	GP	FP 693	12/31/13	GEORGE PROVENCHER	ECI 43

DESIGNED BY R. BRAMEN
DRAWN BY R. BRAMEN
CHECKED BY D. LINK
IN CHARGE G. PROVENCHER
DATE 10/7/13

REGISTERED PROFESSIONAL ENGINEER GEORGE PROVENCHER FP 693 Exp 12-31-13 FIRE PROTECTION STATE OF CALIFORNIA 04/07/14

Exposition Metro Line Construction Authority
Expo

EXPO SKANSKA RADOS
444 South Flower Street
Suite 2200
Los Angeles, CA 90071
TEL (213) 443-7463
FAX (213) 362-9481

LINK - NILSEN CORPORATION
130 E. SANTA CLARA ST.
ARCADIA, CA 91006
LIC # C16 - 275562 PH# 626-445-3414

CURRENT STATUS

EXPOSITION LRT PROJECT- PHASE 2
COLORADO/4TH STREET STATION
FIRE PROTECTION - PLATFORM B
UNDERCAR DELUGE & STANDPIPE PLAN

CONTRACT NO XP8902-002
DRAWING NO FP-S7-113
REV 0
SCALE 1/8"=1'-0"
SHEET NO

Ryan Bramen 10:04 AM 7-Apr-14

J:\ACADWIN\11-13 Expo Phase 2 Design\Colorado-4th Street Station\Expo2 Colorado-4th Fire Protection Design R5.dwg

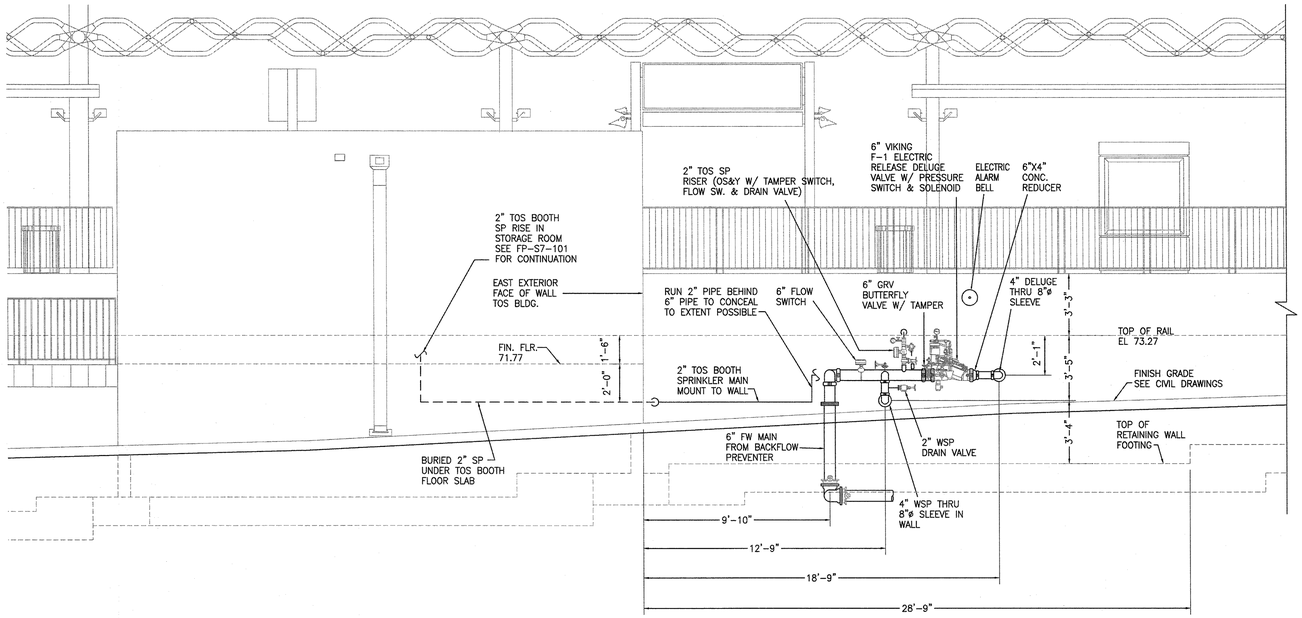

WALL "F" ELEVATION

1/4"=1'-0"

A FP-S7-221

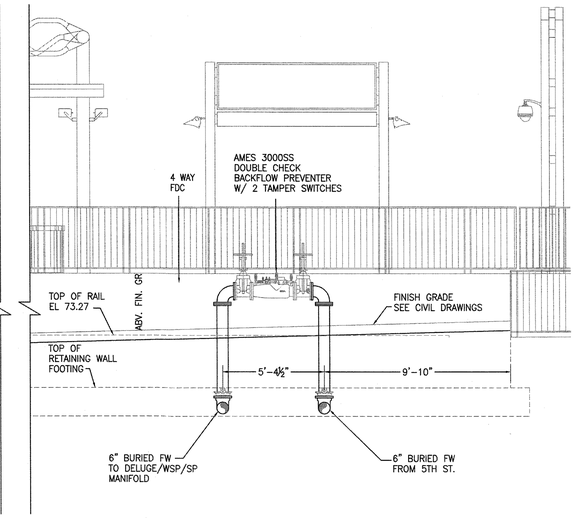

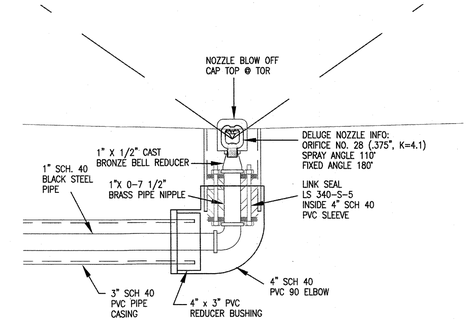

DETAIL

2"=1'-0"

2 FP-S7-221

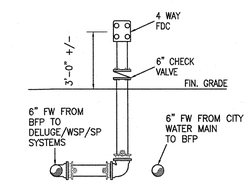

DETAIL

1/4"=1'-0"

3 FP-S7-221

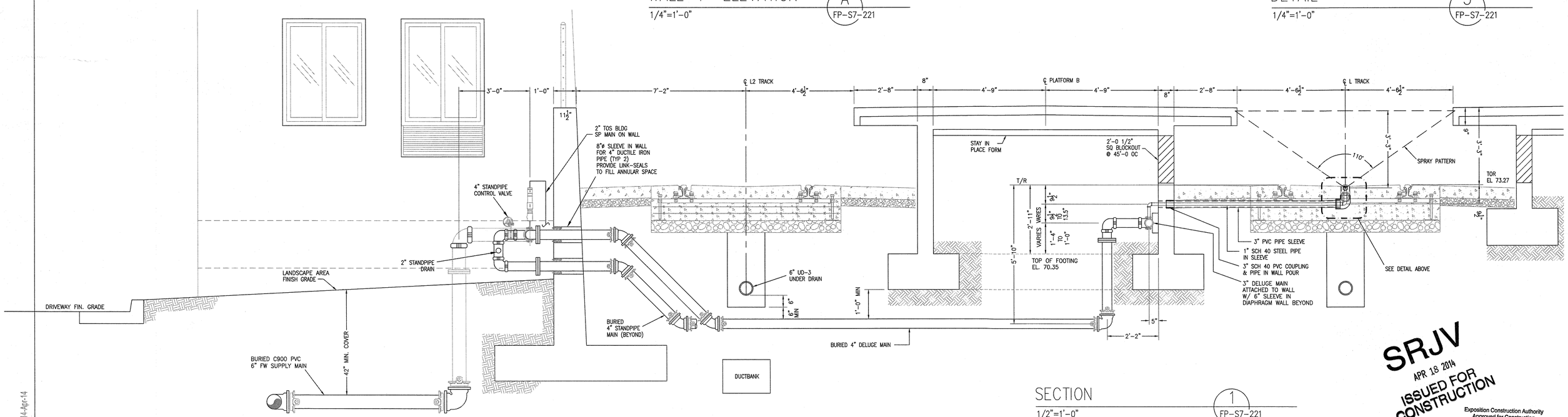

SECTION

1/2"=1'-0"

1 FP-S7-221

SRJV
APR 18 2014
ISSUED FOR CONSTRUCTION
Exposition Construction Authority
Approved for Construction
Drawings - AFC
APR 16 2014

THE PREPARATION OF THIS DRAWING HAS BEEN FINANCED BY THE TAXES OF THE CITIZENS OF LOS ANGELES COUNTY AND OF THE STATE OF CALIFORNIA.

REV	DATE	BY	APP	REG NO	EXPIRES	SEAL HOLDER	DESCRIPTION
0	10/7/13	DL	GP	FP 693	12/31/13	GEORGE PROVENCHER	ECI 43

DESIGNED BY R. BRAMEN
DRAWN BY R. BRAMEN
CHECKED BY D. LINK
IN CHARGE G. PROVENCHER
DATE 10/7/13

REGISTERED PROFESSIONAL ENGINEER GEORGE PROVENCHER FP 693 exp 12-31-15 FIRE PROTECTION STATE OF CALIFORNIA 04/14/14

Exposition Metro Line Construction Authority
Expo

EXPO SKANSKA RADOS

444 South Flower Street
Suite 2200
Los Angeles, CA 90071
TEL (213) 443-7463
FAX (213) 362-9481

LINK - NILSEN CORPORATION
130 E. SANTA CLARA ST.
ARCADIA, CA 91006
LIC # CSLB 275562 PHONE 626-445-3414

CURRENT STATUS

EXPOSITION LRT PROJECT- PHASE 2
COLORADO/4TH STREET STATION
FIRE PROTECTION
ELEVATIONS & DETAILS

CONTRACT NO XP8902-002
DRAWING NO FP-S7-221
REV 0
SCALE AS NOTED
SHEET NO

14-Apr-14 1:45 PM Ryan Bramen

C:\projectwise\pb\projectwise\irtgolay\dms09052\expo2-M-CB-001.dwg

ABBREVIATIONS

A	AMPERES
AC	AIR CONDITIONER
ACCU	AIR COOLED CONDENSING UNIT
AD	DUCT ACCESS DOOR
AFF	ABOVE FINISHED FLOOR
AHU	AIR HANDLING UNIT
ATC	AUTOMATIC TEMPERATURE CONTROLS
BDD	BACKDRAFT DAMPER
BLDG	BUILDING
BOD	BOTTOM OF DUCT
BTU	BRITISH THERMAL UNIT
BV	BRICK VENT
CD	CONDENSATE DRAIN
CFM	CUBIC FEET PER MINUTE
COMM	COMMUNICATIONS
CONT	CONTINUOUS
COP	COEFFICIENT OF PERFORMANCE
DB	DRY BULB
DIA	DIAMETER
DN	DOWN
E	EXHAUST AIR DEVICE
EF	EXHAUST FAN
ELEV.	ELEVATOR
EWH	ELECTRIC WALL HEATER
FD	FIRE DAMPER
GA	GAUGE
HOA	HAND-OFF-AUTOMATIC
HP	HORSEPOWER
HR	HOUR
HZ	HERTZ
IN	INCHES
INSUL	INSULATION
IPLV	INTEGRATED PART LOAD VALUE
KW	KILOWATTS
L	LOUVER OR LENGTH
LBS	POUNDS
MANUF	MANUFACTURER
MAX	MAXIMUM
MBH	THOUSAND BTU/HR
MCA	MINIMUM CIRCUIT AMPS
MFA	MINIMUM FUSE AMPS
MIN	MINIMUM
MOCP	MINIMUM OVERCURRENT PROTECTION
MOD	MOTOR OPERATED DAMPER
MANUF.	MANUFACTURER
NC	NOISE CRITERIA
NO	NUMBER
PH	PHASE
POS	PROVIDED UNDER OTHER SECTIONS
R	RETURN OR EXHAUST AIR DEVICE
RL	REFRIGERATION LIQUID
RM	ROOM
RS	REFRIGERATION SUCTION
RTU	ROOFTOP UNIT
S	SUPPLY AIR DEVICE
SCADA	SUPERVISORY CONTROL AND DATA ACQUISITION
SEER	SEASONAL ENERGY EFFICIENCY RATIO
SF	SUPPLY FAN
SHTMTL	SHEET METAL
SMACNA	SHEET METAL AND AIR CONDITIONING CONTRACTORS NATIONAL ASSOCIATION
SP	STATIC PRESSURE
SPEC	SPECIFICATION
T	THERMOSTAT
TEMP	TEMPERATURE
TS	TEMPERATURE SENSOR
TYP	TYPICAL
V	VOLTAGE
VD	VOLUME DAMPER
W/	WITH
WB	WET BULB
W.G	WATER GAUGE
WMS	WIRE MESH SCREEN

SYMBOLS

HVAC LEGEND

- BALL VALVE
- CHECK VALVE
- GATE VALVE
- RISER DOWN
- BRANCH–TOP CONNECTION
- BRANCH–BOTTOM CONNECTION
- CAP ON END OF PIPE
- TEE
- CONCENTRIC REDUCER
- ECCENTRIC REDUCER
- UNION
- PRESSURE/TEMPERATURE PLUG
- STRAINER
- DIRECTION OF FLOW
- DOWNWARD DIRECTION OF PIPE PITCH
- VOLUME DAMPER
- FD — FIRE DAMPER
- BDD — BACKDRAFT DAMPER
- M — MOTOR OPERATED DAMPER
- SUPPLY DUCT UP
- SUPPLY DUCT DOWN
- RETURN OR EXHAUST DUCT UP
- RETURN OR EXHAUST DUCT DOWN
- SUPPLY DIFFUSER
- RETURN OR EXHAUST DIFFUSER
- FLEXIBLE DUCT
- T — THERMOSTAT
- S HOA — SWITCH, HOA SUBSCRIPT IDENTIFIES INTEGRAL HAND–OFF–AUTO SWITCH
- TS — TEMPERATURE SENSOR
- FS — FLOW SENSOR
- RL/RS — REFRIGERANT PIPING
- RL/RS — REFRIGERANT PIPING – BELOW GROUND OR FLOOR

CIRCLED AREA SHOWN ON LARGE SCALE DETAIL — 1 / M-201 — DETAIL NUMBER / DRAWING NUMBER

DETAIL REFERENCE — 1 / M-201 — DETAIL NUMBER / DRAWING NUMBER

SECTION/DETAIL REFERENCE (SHOWN ON PLAN) — A / M-201 — SECTION LETTER / DRAWING NUMBER

DETAIL TITLE — DETAIL 1 1/2"=1'-0" — 3 / M-G-601 M-5-101
- DETAIL TITLE
- DETAIL (NUMBER/LETTER)
- DRAWING ON WHICH DETAIL IS IDENTIFIED
- DRAWING ON WHICH DETAIL APPEARS
- SCALE OF DETAIL

ROOM NUMBER — OFFICE / 001 — ROOM NAME / ROOM NUMBER

COLUMN GRID — A

REVISION MARK — 1 — REVISION NUMBER

GENERAL NOTES

1. INTENT: THE INTENT OF THE DRAWINGS IS TO PROVIDE THAT THE WORK AND ALL PARTS THEREOF SHALL BE, WHEN FULLY COMPLETED, SUITABLE IN EVERY WAY FOR THE PURPOSES FOR WHICH IT IS INTENDED. PROVIDE ALL MATERIALS AND LABOR NECESSARY TO MAKE THE SYSTEM FULLY OPERABLE AND IN COMPLIANCE WITH ALL APPLICABLE CODES.
2. DRAWINGS: THE DRAWINGS ARE GENERALLY DIAGRAMMATIC AND INDICATIVE OF THE WORK TO BE PERFORMED AND SHALL BE FOLLOWED AS CLOSELY AS POSSIBLE. EXACT LOCATIONS OF DUCTWORK, PIPING, ETC. SHALL BE DETERMINED AT THE SITE TO SUIT ACTUAL SITE CONDITIONS.
3. COORDINATION: COORDINATE ALL WORK AND WORK SCHEDULES WITH THAT OF OTHER TRADES AFFECTED BY THE ENTIRE SCOPE OF THE PROJECT SO THAT ALL WORK MAY BE INSTALLED IN THE MOST DIRECT AND WORKMANLIKE MANNER AND SO THAT INTERFERENCE WITH DUCTWORK, PIPING, EQUIPMENT, CONTROLS, ELECTRICAL, ARCHITECTURAL, STRUCTURAL COMPONENTS, TENANT FURNISHED ITEMS AND ALL OTHER WORK IS AVOIDED. COORDINATION DRAWINGS MUST BE SUBMITTED AND REVIEWED AND ALL COMMENTS RESOLVED BEFORE ANY WORK WILL BE ALLOWED TO START.
4. INSTALLATION SHALL PERMIT ACCESSIBILITY FOR SERVICE OR REPLACEMENT. COORDINATE INSTALLATION OF ALL EQUIPMENT AND COMPONENTS FOR ACCESSIBILITY TO MEET MANUFACTURER SUGGESTED CLEARANCES AROUND EQUIPMENT FOR MAINTENANCE AND REPAIR. THE INSTALLATION OF BUILDING MATERIALS AND COMPONENTS SHALL ALLOW SUFFICIENT SPACE FOR MAINTENANCE AND SERVICE WITHOUT LIMITED RANGE OF MOTION THAT WOULD REQUIRE DECONSTRUCTION OF THE SPACE OR INSTALLATION TO PROVIDE THE REQUIRED SERVICE.
5. WHEREVER THE REQUIREMENTS AND REGULATIONS OF FEDERAL OR STATE ARE MORE STRINGENT THAN THE REQUIREMENTS INDICATED ON THE DRAWINGS OR SPECIFICATIONS, THEY SHALL TAKE PRECEDENCE OVER THE DRAWINGS OR SPECIFICATIONS AND SHALL BE MADE PART OF THE CONTRACT. HOWEVER WHERE THE DRAWINGS OR SPECIFICATIONS ARE MORE STRINGENT THAN FEDERAL OR STATE AUTHORITY REQUIREMENTS AND REGULATION, THE MORE STRINGENT SHALL APPLY.
6. EQUIPMENT SIZES AND SPACE ALLOCATIONS FOR MECHANICAL EQUIPMENT ARE BASED ON INFORMATION FROM THE SCHEDULED MANUFACTURER. THE CONTRACTOR SHALL VERIFY ACTUAL SIZES BASED ON EQUIPMENT SUPPLIER'S CERTIFIED DRAWINGS AND MODIFY WORK AS REQUIRED TO SUIT SIZES OF ACTUAL EQUIPMENT TO BE PROVIDED
7. ELECTRICAL POWER PROVISIONS FOR MECHANICAL EQUIPMENT ARE BASED ON PRELIMINARY INFORMATION FROM THE SCHEDULED MANUFACTURER. THE CONTRACTOR SHALL SUBMIT A SCHEDULE OF ANY PROPOSED CHANGES FOR ACCEPTANCE BY THE ENGINEER. ALL ACCEPTED CHANGES SHALL BE RECORDED ON "AS BUILT" DRAWINGS.
8. ALL DUCTWORK AND PIPING SHALL BE INSTALLED AS HIGH AS POSSIBLE AND AS CLOSE AS POSSIBLE TO CEILING/ FLOOR STRUCTURES TO MAINTAIN MAXIMUM CEILING HEIGHTS, TO CONCEAL WORK AND TO KEEP OUT OF WAY. MAINTAIN A MINIMUM OF 7' - 6" HEADROOM. PIPING AND DUCTWORK SHALL BE CONCEALED IN ALL FINISHED AREAS.
9. CONTRACTOR SHALL PROVIDE VOLUME DAMPERS AT ALL SUPPLY, RETURN AND EXHAUST BRANCH DUCTWORK AT ALL REGISTER AND DIFFUSER RUNOUTS AND WHEREVER REQUIRED FOR PURPOSE OF SYSTEM BALANCING.
10. PROVIDE SLEEVES FOR ALL PIPES PENETRATING WALLS AND FLOOR AS PER SPECIFICATIONS. SEAL ALL OPENINGS WHERE PIPES AND DUCTWORK PENETRATES SLABS AND WALLS TO PREVENT AIR AND MOISTURE FLOW BETWEEN SPACES AND FROM OUTSIDE TO INSIDE OF BUILDING.
11. SEAL ALL OPENINGS WHERE DUCTS AND PIPES PENETRATE NON-RATED WALLS TO PREVENT AIR TRANSFER BETWEEN SPACES WITH FOAM PLUS MANUFACTURED BY INSTA-FOAM PRODUCTS OR APPROVED EQUAL. USE APPROVED FIRE STOPPING MATERIALS TO SEAL OPENINGS IN RATED WALLS.
12. LOCATIONS OF ROOM THERMOSTATS AND TEMPERATURE SENSORS ARE APPROXIMATE AND FINAL LOCATIONS SHALL BE COORDINATED AT THE FIELD.
13. THE CONTRACTOR SHALL COORDINATE IN THE FIELD AND PROVIDE NECESSARY OFFSETS VERTICAL AND HORIZONTAL DUCTWORK, PIPING, FITTING AND VALVES AS REQUIRED.
14. ALL WORK SHALL BE CONSTRUCTED TO MEET SEISMIC RESTRAINT AND WIND RESTRAINT LOADINGS PER THE CRITERIA STATED IN THE GENERAL STRUCTURAL NOTES ON THE STRUCTURAL DRAWINGS. COMPLY WITH CA SEISMIC ZONE 4 REQUIREMENTS.

AUTOMATIC TEMPERATURE CONTROLS SEQUENCE OF OPERATIONS

GENERAL

PROVIDE A COMPLETE AUTOMATIC TEMPERATURE CONTROL SYSTEMS CONSISTING OF ALL ITEMS INCLUDING THOSE NOT SPECIFIED HEREIN OR SHOWN ON THE DRAWINGS BUT NECESSARY TO PERFORM THE FUNCTIONS SPECIFIED UNDER THIS "SEQUENCE OF OPERATIONS". THE CONTROL SYSTEM SHALL CONSIST OF ALL THERMOSTATS, TEMPERATURE TRANSMITTERS, CONTROLLERS, RELAYS, DAMPERS, DAMPER OPERATORS, CONTROL PANELS, AND OTHER ACCESSORY EQUIPMENT ALONG WITH A COMPLETE SYSTEM OF ELECTRICAL WIRING TO FILL THE INTENT OF THE SPECIFICATION AND PROVIDE FOR A COMPLETE AND OPERABLE SYSTEM. COMMISSION ALL CONTROLS WORK TO VERIFY THAT SYSTEMS OPERATE IN ACCORDANCE WITH THE SPECIFIED SEQUENCE OF OPERATIONS.

ALL CONTROL DEVICES SHALL BE ELECTRIC OR ELECTRONIC. WHERE INDICATED, CONTROLS AND MONITORING SHALL BE VIA THE SCADA SYSTEM.

THE SEQUENCES DESCRIBED BELOW INDICATE THE ACTIONS OF THE CONTROL SYSTEM FOR ONE CHANGE IN DIRECTION OF THE HVAC PROCESS VARIABLE SUCH AS TEMPERATURE OR PRESSURE. THE REVERSE SEQUENCE SHALL OCCUR WHEN THE DIRECTION OF CHANGE IS REVERSED.

LABEL ALL THERMOSTATS, TEMPERATURE SENSORS AND SWITCHES WITH PLASTIC LAMINATED SIGNS INDICATING UNIT NUMBER OF EQUIPMENT SERVED.

MOTOR STARTERS AND DISCONNECT SWITCHES SHALL BE PROVIDED UNDER THE MECHANICAL SECTIONS OF THE WORK. COORDINATE MOTOR STARTER REQUIREMENTS SO THAT THE INDICATED CONTROL REQUIREMENTS WILL BE MET.

COMMUNICATIONS AND SIGNAL BUILDINGS

PACKAGED ROOFTOP UNIT HEAT PUMPS RTU-A & B SHALL BE CONTROLLED BY A SPACE TEMPERATURE SENSOR AND LEAD/LAG CONTROLLER. THE RTU SUPPLY FAN FOR THE LEAD RTU SHALL OPERATE CONTINUOUSLY. THE ROOFTOP UNITS SHALL BE STAGED WITH ROOFTOP UNITS OPERATING ON A LEAD-LAG BASIS. HEAT PUMP HEATING, ECONOMIZER COOLING AND MECHANICAL COOLING SHALL BE CONTROLLED IN SEQUENCE TO MAINTAIN THE SPACE AT SETPOINT (60 DEGREES F HEATING AND 75 DEGREE F COOLING, ADJUSTABLE FOR LEAD ROOFTOP UNIT AND 55 DEGREES F HEATING AND 80 DEGREES F COOLING, ADJUSTABLE FOR LAG ROOFTOP UNIT). THE LEAD-LAG STATUS OF THE TWO ROOFTOP UNITS SHALL ROTATE EACH MONTH. BOTH RTUs SHALL SHUT DOWN IF A HEAT AND/OR SMOKE DETECTOR IN THE SPACE IS ACTIVATED. THE UNITS WILL RESUME NORMAL OPERATION WHEN THE FIRE ALARM CONTROL PANEL IS RESET.

EXHAUST FAN (EF) SHALL BE CONTROLLED BY A HAND/OFF/AUTOMATIC (HOA) SWITCH. IF THE HOA SWITCH IS PLACED IN THE OFF POSITION, THE FAN SHALL REMAIN OFF. IF THE HOA SWITCH IS PLACED IN THE HAND POSITION, THE OUTDOOR AIR INTAKE MOTOR OPERATED CONTROL DAMPER SHALL OPEN AND THE EXHAUST FAN SHALL START. IF THE HOA SWITCH IS PLACED IN THE AUTOMATIC POSITION, THE EXHAUST FAN SHALL START AND ASSOCIATED MOTOR OPERATED DAMPER ON OUTDOOR AIR INTAKE SHALL OPEN IF THE SPACE TEMPERATURE INCREASES ABOVE SETPOINT (85 DEGREES F, ADJUSTABLE). IF THE HOA SWITCH IS PLACED IN THE AUTOMATIC OR HAND POSITION AND THE FAN IS RUNNING, THE FAN SHALL SHUT DOWN IF A HEAT AND/OR SMOKE DETECTOR IN THE SPACE IS ACTIVATED. THE FAN WILL RESUME NORMAL OPERATION WHEN THE FIRE ALARM CONTROL PANEL IS RESET.

SIGNALS SHALL BE TRANSMITTED TO THE SCADA SYSTEM AS FOLLOWS:

- IF AN INDOOR AIR TEMPERATURE SENSOR SENSES A TEMPERATURE ABOVE 85 DEGREES F (ADJUSTABLE), AN ALARM SHALL BE TRANSMITTED.
- IF EITHER ROOFTOP UNIT IS IN A TROUBLE CONDITION, AN ALARM SHALL BE TRANSMITTED
- IF AN AIR FLOW SENSOR FOR THE LEAD ROOFTOP UNIT SENSES A NO-FLOW CONDITION, AN ALARM SHALL BE TRANSMITTED.
- IF AN AIR FLOW SENSOR FOR THE THE EXHAUST FAN SENSES AIR FLOW, AN ALARM SHALL BE TRANSMITTED.

TRAIN CONDUCTOR'S LOUNGE

PACKAGED TERMINAL HEAT PUMP UNIT SHALL BE CONTROLLED BY A REMOTE WALL THERMOSTAT FURNISHED WITH UNIT. MOUNT AND WIRE THERMOSTAT.

ELECTRIC WALL HEATER SHALL BE CONTROLLED BY INTEGRAL THERMOSTAT.

BATHROOM EXHAUST FAN SHALL BE CONTROLLED BY BATHROOM LIGHT SWITCH.

SRJV JUN 24 2013 ISSUED FOR CONSTRUCTION

THE PREPARATION OF THIS DRAWING HAS BEEN FINANCED BY THE TAXES OF THE CITIZENS OF LOS ANGELES COUNTY AND OF THE STATE OF CALIFORNIA.

REV	DATE	BY	APP	REG NO	EXPIRES	SEAL HOLDER	DESCRIPTION
0	5/30/13	RG	RG	M33848	9/30/13	RONALD B. GOLAY	APPROVED FOR CONSTRUCTION

DESIGNED BY R.GOLAY
DRAWN BY R.GOLAY
CHECKED BY D.HAMILTON
IN CHARGE R.GOLAY
DATE 5/30/13

REGISTERED PROFESSIONAL ENGINEER — RONALD B. GOLAY — No. M33848 — Exp. 09-30-13 — MECHANICAL — STATE OF CALIFORNIA

Exposition Metro Line Construction Authority
Expo
Exposition Construction Authority Approved for Construction Drawings - AFC

EXPO SKANSKA RADOS
444 South Flower Street
Suite 2200
Los Angeles, CA 90071
TEL (213) 443-7463
FAX (213) 362-9481

PARSONS BRINCKERHOFF JUN 21 2013
CURRENT STATUS

EXPOSITION LRT PROJECT- PHASE 2
MECHANICAL
COMMON FOR 4TH ST STATION
ABBREVIATIONS, SYMBOLS, GENERAL NOTES & SEQUENCE OF OPERATIONS

CONTRACT NO XP8902-002
DRAWING NO M-CB-001 REV 0
SCALE NONE
SHEET NO

Golay, Ron 4:24 PM 29-May-13

FAN SCHEDULE

UNIT NO.	STATION SERVED	ROOM SERVED	MANUF	MODEL	AIR FLOW CFM	SP IN WG	MOTOR HP	ELECTRIC VOLT	ELECTRIC PH	ELECTRIC HZ	MAX NOISE SONES	REMARKS
EF-1	NATIONAL PALMS	COMM/SIGNAL BLDG	GREENHECK	SBE-3H30-30	7000	1.0	3	208	3	60	38	1
EF-2	EXPO/WESTWOOD	COMM/SIGNAL BLDG	GREENHECK	SBE-3H30-30	7000	1.0	3	208	3	60	38	1
EF-3A	EXPO/SEPULVEDA	COMM/SIGNAL RM	GREENHECK	SBE-3H30-30	7000	1.0	3	208	3	60	38	1
EF-3B	EXPO/SEPULVEDA	STORAGE ROOM	GREENHECK	SP-A390	300	0.3	135 WATTS	120	1	60	4.5	2
EF-4A	EXPO/BUNDY	COMM/SIGNAL BLDG	GREENHECK	SBE-3H30-30	7000	1.0	3	208	3	60	38	1
EF-4B	EXPO/BUNDY	STORAGE ROOM	GREENHECK	SP-A390	300	0.3	135 WATTS	120	1	60	4.5	2
EF-5	OLYMPIC/26TH STREET	COMM/SIGNAL BLDG	GREENHECK	SBE-3H30-30	7000	1.0	3	208	3	60	38	1
EF-6	COLORADO/17TH STREET	COMM/SIGNAL BLDG	GREENHECK	SBE-3H30-30	7000	1.0	3	208	3	60	38	1
EF-7A	COLORADO/4TH STREET	COMM/SIGNAL BLDG	GREENHECK	SBE-3H30-30	7000	1.0	3	208	3	60	38	1
EF-7B	COLORADO/4TH STREET	BATHROOM	PANASONIC	FV-08VQC5	75	0.15	15 WATTS	120	1	60	0.3	2
SF-1	NATIONAL PALMS	ELECTRIC ROOM	GREENHECK	CSP-A1050	905	0.4	455 WATTS	120	1	60	3	3
SF-3	EXPO/SEPULVEDA	ELECTRIC ROOM	GREENHECK	CSP-A1050	905	0.4	455 WATTS	120	1	60	3	3
SF-4	EXPO/BUNDY	ELECTRIC ROOM	GREENHECK	CSP-A1050	905	0.4	455 WATTS	120	1	60	3	3

GREENHECK USED AS BASIS OF DESIGN. PROVIDE GREENHECK, LOREN COOK, PENN OR APPROVED EQUAL. PROVIDE PREMIUM EFFICIENCY MOTORS FOR ALL FANS.

1. WALL MOUNTED BELT DRIVEN GALVANIZED STEEL PADDLE FAN WITH STEEL PROPELLER WITH GRAVITY DAMPER, WALL HOUSING AND OSHA GUARD, SPARE BELT, DISCONNECT SWITCH, EXTENDED LUBE LINES, BEARINGS WITH GREASE FITTINGS.
2. CEILING FAN WITH INTEGRAL GRILL
3. BELT DRIVEN CENTRIFUGAL CABINET FAN, GALVANIZED STEEL HOUSING, BOLTED ACCESS PANEL, INLET & OUTLET DUCT FLANGES, DISCONNECT SWITCH.

PACKAGED TERMINAL HEAT PUMP

UNIT NO.	MANUF.	MODEL	LOCATION	COOLING CAPACITY BTU/HR	HEATING CAPACITY BTU/HR	ELECTRIC VOLT	ELECTRIC PH	EER	SEER	COP	REMARKS
PTHP-1	GE	AZ61H15D	4TH ST STATION TOS BOOTH	14,600	13,900	208	1	11.2	13.2	3.3	1 SEE BELOW

NOTES: GE USED AS BASIS OF DESIGN. PROVIDE GE, TRANE, CARRIER, BRYANT OR APPROVED EQUAL.

1. PROVIDE INSULATED WALL CASE, ARCHITECTURAL EXTRUDED ALUMINUM GRILL, LEVELING LEGS, SUB-BASE, CORROSION PROTECTION, REMOTE WALL THERMOSTAT, SPARE FILTERS AND CORROSION RESISTANT CHASSIS.

ELECTRIC HEATER SCHEDULE

UNIT NO.	MANUF.	MODEL	LOCATION	CAPACITY KW	ELECTRIC VOLT	ELECTRIC PH	REMARKS (SEE BELOW)
EWH-1	Q MARK	LFK204	SEE PLANS	1.5	208	1	1 WALL MOUNTED HEATER

NOTES: QMARK USED AS BASIS OF DESIGN. PROVIDE QMARK, BERKO, CHROMOLOX OR APPROVE EQUAL.

1. 14 GAUGE SECURITY FRONT COVER. PROVIDE RECESSED MOUNTING ENCLOSURE WHERE UNIT IS TO BE INSTALLED IN GYPSUM WALLBOARD WALL. PROVIDE INTEGRAL THERMOSTAT.

ROOFTOP HEAT PUMP UNIT SCHEDULE

UNIT NO.	RTU-1A,1B	RTU-2A,2B	RTU-3A,3B	RTU-4A,4B	RTU-5A,5B	RTU-6A,6B	RTU-7A,7B
STATION SERVED	NATIONAL/PALMS	EXPO/WESTWOOD	EXPO/SEPULVEDA	EXPO/BUNDY	OLYMPIC/26TH ST	COLORADO/17TH ST	4TH ST
ROOM SERVED	COMM/SIGNAL RM	COMM/SIGNAL RM	COMM/SIGNAL RM	COMM/SIGNAL RM	COMM/SIGNAL RM	COMM/SIGNAL RM	COMM/SIGNAL RM
MANUFACTURER	TRANE	TRANE	TRANE	TRANE	TRANE	TRANE	TRANE
MODEL NO.	4WCZ6036A3000A	4WCZ6036A3000A	4WCZ6036A3000A	4WCZ6036A3000A	4WCZ6036A3000A	4WCZ6036A3000A	4WCZ6048A3000A
TOTAL AIR FLOW - CFM	1350	1350	1350	1350	1350	1350	1800
MIN. OUTSIDE AIR - CFM	40	40	40	40	40	40	40
EXTERNAL SP - IN WG	0.7	0.7	0.7	0.7	0.7	0.7	0.7
SUMMER ENTERING AIR TEMP	80/67	80/67	80/67	80/67	80/67	80/67	80/67
TOTAL COOLING - MBH	37.1	37.1	37.1	37.1	37.1	37.1	48.5
SENSIBLE COOLING - MBH	27.8	27.8	27.8	27.8	27.8	27.8	35.9
REFRIGERANT	R-410A	R-410A	R-410A	R-410A	R-410A	R-410A	R-410A
HEAT - BTU/HR/COP	34,000/3.9	34,000/3.9	34,000/3.9	34,000/3.9	34,000/3.9	34,000/3.9	44,500/4.0
MINIMUM SEER	16.4	16.4	16.4	16.4	16.4	16.4	16.0
COMPRESSORS	2 STAGE SCROLL	2 STAGE SCROLL	2 STAGE SCROLL	2 STAGE SCROLL	2 STAGE SCROLL	2 STAGE SCROLL	2 STAGE SCROLL
ELECTRICAL - V/PH/HZ	208/230-3-60	208/230-3-60	208/230-3-60	208/230-3-60	208/230-3-60	208/230-3-60	208/230-3-60
MCA (AMPS)	19.1	19.1	19.1	19.1	19.1	19.1	24.5
MOCP (AMPS)	30	30	30	30	30	30	35
APPROXIMATE WEIGHT-LBS	500	500	500	500	500	500	600
NOTES	2	2	1	1	2	2	1

NOTES: TRANE USED AS BASIS OF DESIGN. PROVIDE TRANE, CARRIER, MCQUAY OR APPROVED EQUAL. ALL UNITS DOWNFLOW CONFIGURATION. SELECTIONS BASED ON 95 F DB, 74 F WB AMBIENT AIR TEMP.

1. CONSTANT VOLUME, VERTICAL DISCHARGE. PROVIDE DRY BULB ECONOMIZER WITH ACTUATORS AND BAROMETRIC RELIEF, LOW AMBIENT CONTROL, ELECTRONIC PROGRAMMABLE THERMOSTAT, HINGED FILTER ACCESS DOOR, FILTER RACK AND 2" MERV 8 FILTERS AND 8" TALL SEISMIC ROOF CURB SLOPED TO MATCH ROOF PITCH.
2. SAME AS ABOVE EXCEPT PROVIDE MANUAL OUTSIDE AIR DAMPER WITH RAIN HOOD AND SCREEN.

NOTE: SPACE IS LIMITED. VERIFY THAT MANUFACTURER'S RECOMMENDED CLEARANCES ARE PROVIDED.

AIR DISTRIBUTION DEVICE SCHEDULE

UNIT NO.	MANUF.	MODEL	NECK SIZE	CFM RANGE	MAX NC	DESCRIPTION
DD1	TITUS	300FL	20x8	0-950	30	ALUMINUM DOUBLE DEFLECTION SUPPLY DIFFUSER WITH OPPOSED BLADE DAMPER

TITUS USED AS BASIS OF DESIGN. PROVIDE TITUS, PRICE, CARNES OR APPROVED EQUAL

DUCT RUNOUT SIZES SHALL MATCH INDICATED NECK SIZES.
PROVIDE BALANCING DAMPERS IN ALL SUPPLY, RETURN AND EXHAUST RUNOUTS
PROVIDE BAKED ENAMEL, WHITE FINISH.

UNIT NO. — DD1-675
CFM

SRJV
JUN 24 2013
ISSUED FOR CONSTRUCTION

THE PREPARATION OF THIS DRAWING HAS BEEN FINANCED BY THE TAXES OF THE CITIZENS OF LOS ANGELES COUNTY AND OF THE STATE OF CALIFORNIA.

REV	DATE	BY	APP	REG NO	EXPIRES	SEAL HOLDER	DESCRIPTION
0	5/30/13	RG	RG	M33848	9/30/13	RONALD B. GOLAY	APPROVED FOR CONSTRUCTION

DESIGNED BY R.GOLAY
DRAWN BY R.GOLAY
CHECKED BY D.HAMILTON
IN CHARGE R.GOLAY
DATE 5/30/13

REGISTERED PROFESSIONAL ENGINEER — RONALD B. GOLAY — No. M33848 — Exp. 09-30-13 — MECHANICAL — STATE OF CALIFORNIA

Exposition Metro Line Construction Authority
Expo
Exposition Construction Authority Approved for Construction Drawings - AFC
EXPO SKANSKA RADOS
444 South Flower Street
Suite 2200
Los Angeles, CA 90071
TEL (213) 443-7463
FAX (213) 362-9481
PARSONS BRINCKERHOFF
JUN 21 2013
CURRENT STATUS

EXPOSITION LRT PROJECT- PHASE 2
MECHANICAL
COMMON FOR 4TH ST STATION
SCHEDULES

CONTRACT NO XP8902-002
DRAWING NO M-CB-002
REV 0
SCALE NONE
SHEET NO

C:\projectwise\ph\projectwise\intl\pla\ly\dms08062\expo2-M-CB-002.dwg
29-May-13 4:25 PM Golay, Ron

C:\projectwise\pb\projectwiseintl\golay\dms00052\expo02-M-C-003.dwg

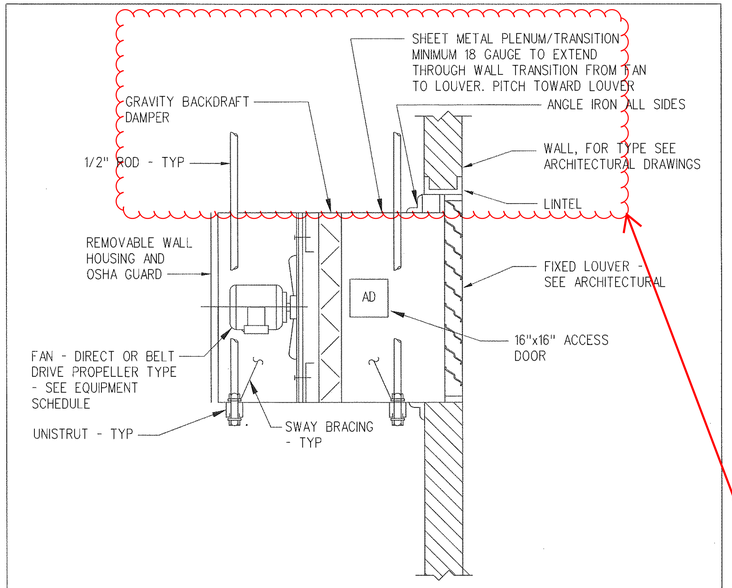

WALL EXHAUST FAN DETAIL 1 M-C-003
NO SCALE

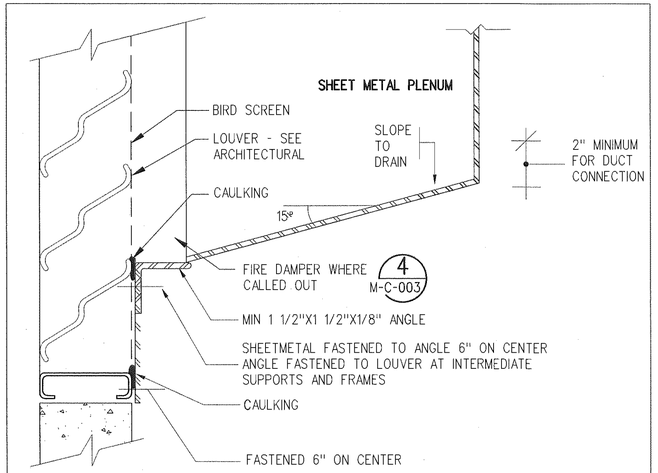

NOTES:

SUPPORT PLENUM FROM FLOOR OR STRUCTURE ABOVE W/GALVANIZED STEEL ANGLES AND CHANNELS.

BLANK OFF UNUSED PORTIONS OF LOUVER WITH METAL PANELS.

PLENUM LOUVER DETAIL 2 M-C-003
NO SCALE

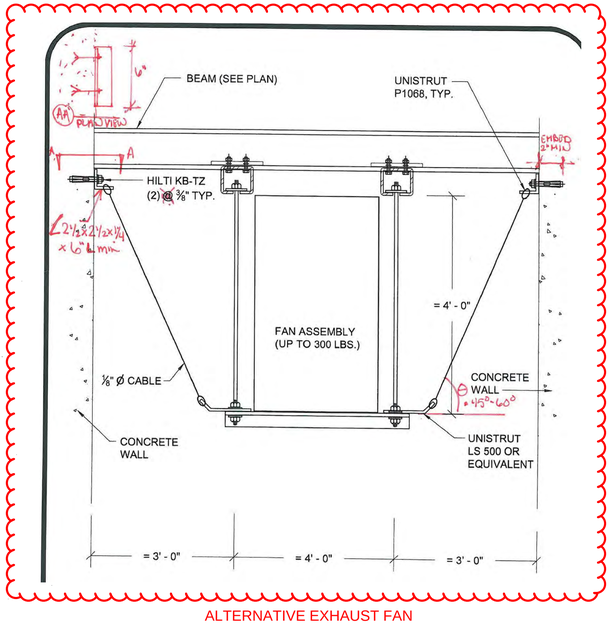

ALTERNATIVE EXHAUST FAN SUPPORT PER DRFI 10873

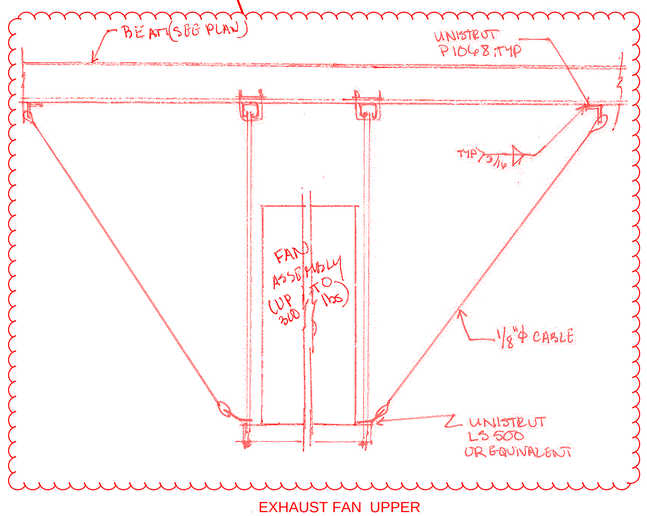

EXHAUST FAN UPPER ATTACHMENT DETAIL ADDED PER DRFI 10723

SRJV
FEB 01 2013
ISSUED FOR CONSTRUCTION

THE PREPARATION OF THIS DRAWING HAS BEEN FINANCED BY THE TAXES OF THE CITIZENS OF LOS ANGELES COUNTY AND OF THE STATE OF CALIFORNIA.

REV	DATE	BY	APP	REG NO	EXPIRES	SEAL HOLDER	DESCRIPTION
0	1/24/13	RG	RG	M33848	9/30/13	RONALD B. GOLAY	APPROVED FOR CONSTRUCTION

DESIGNED BY R.GOLAY
DRAWN BY R.GOLAY
CHECKED BY D.HAMILTON
IN CHARGE R.GOLAY
DATE 1/24/13

REGISTERED PROFESSIONAL ENGINEER RONALD B. GOLAY No. M33848 Exp. 09-30-13 MECHANICAL STATE OF CALIFORNIA

Exposition Metro Line Construction Authority
Expo
Exposition Construction Authority Approved for Construction Drawings - AFC
JAN 31 2013

EXPO SKANSKA RADOS
444 South Flower Street
Suite 2200
Los Angeles, CA 90071
TEL (213) 443-7463
FAX (213) 362-9481

PARSONS BRINCKERHOFF

CURRENT STATUS

EXPOSITION LRT PROJECT- PHASE 2
MECHANICAL
COMMON
DETAILS

CONTRACT NO XP8902-002
DRAWING NO M-C-003
REV 0
SCALE NONE
SHEET NO

22-Jan-13 3:03 PM Golay, Ron

C:\projectwise\pb\projectwise\saintlgolay\dms09152\expo24-M-S7-101.dwg

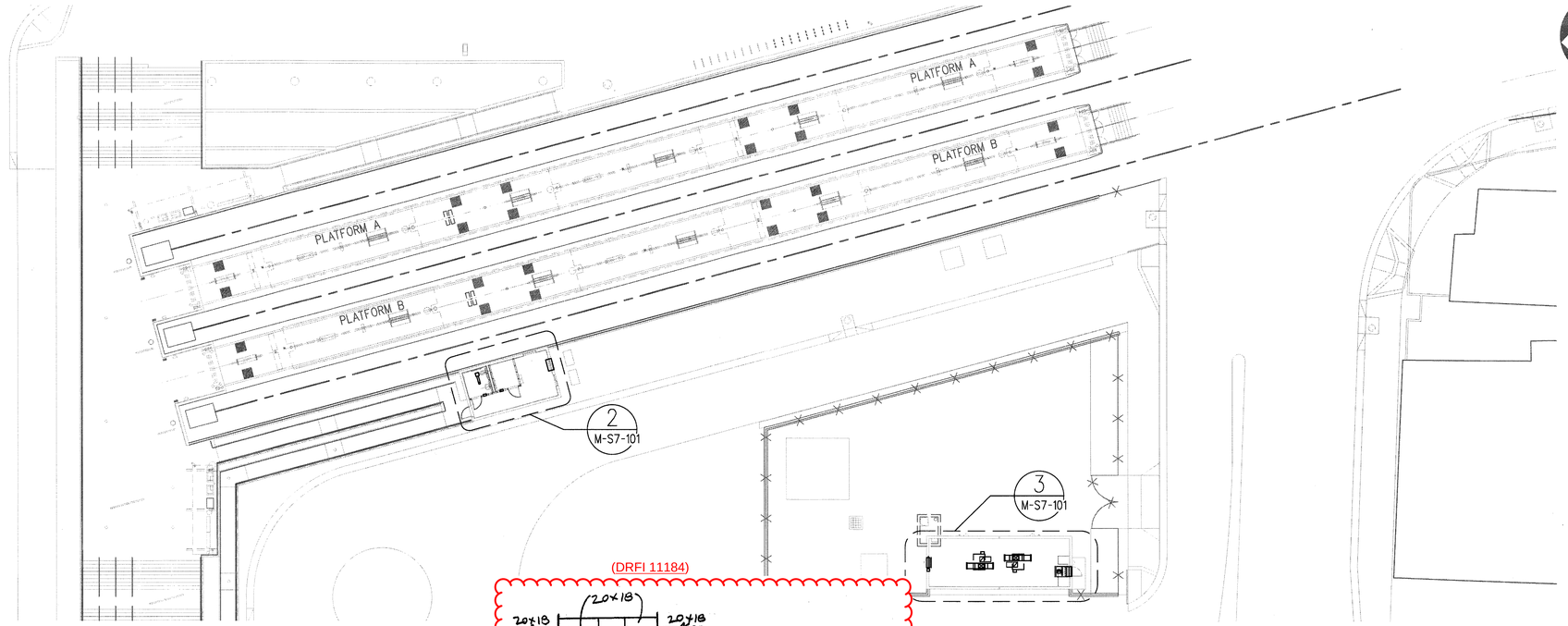

TITLE 24 COMPLIANCE

SEE DRAWINGS ET-S7-001 THROUGH ET-S7-006 FOR TITLE 24 COMPLIANCE FORMS PERTAINING TO THE HVAC SYSTEMS SERVING THE TOS BOOTH AT COLORADO/4TH ST STATION.

SITE PLAN 1 M-S7-101

1"=20'-0"

20' 10' 0 20' 40'

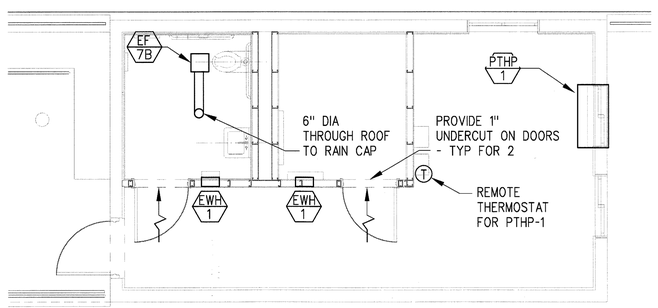

TOS BOOTH HVAC PLAN 2 M-S7-101

1/4"=1'-0"

4' 2' 0 4' 8'

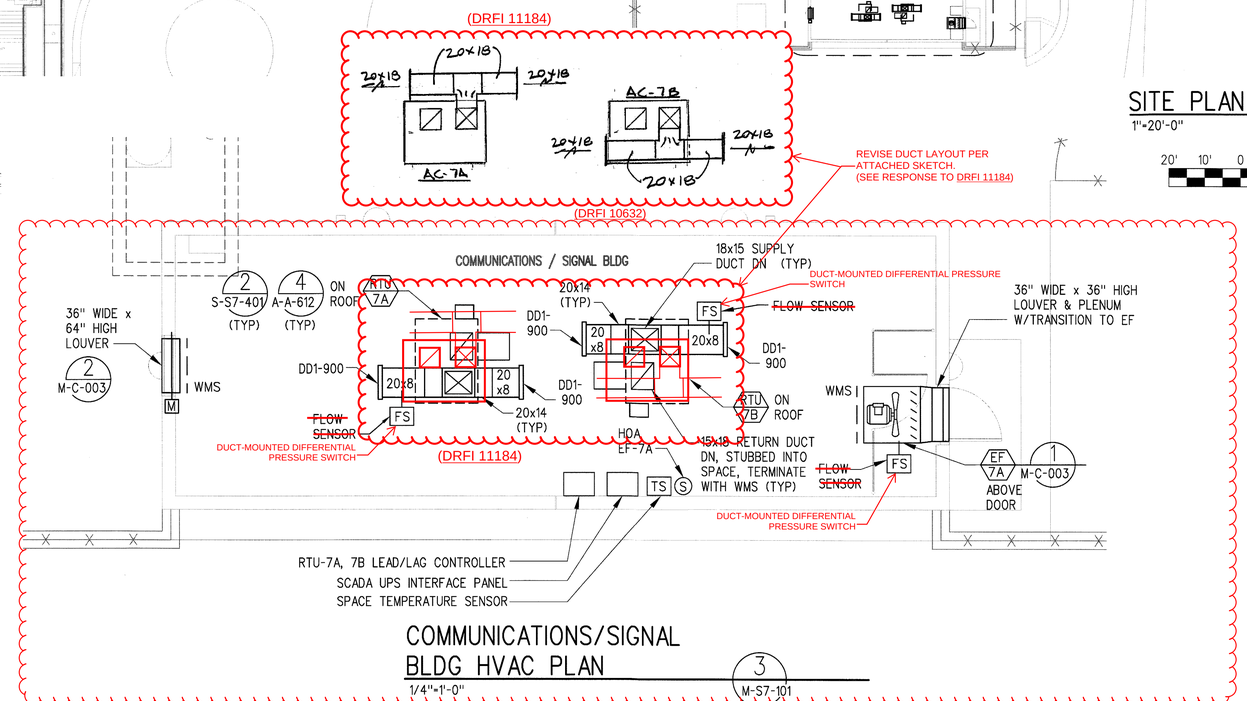

COMMUNICATIONS/SIGNAL BLDG HVAC PLAN 3 M-S7-101

1/4"=1'-0"

4' 2' 0 4' 8'

SRJV JUN 24 2013 ISSUED FOR CONSTRUCTION

THE PREPARATION OF THIS DRAWING HAS BEEN FINANCED BY THE TAXES OF THE CITIZENS OF LOS ANGELES COUNTY AND OF THE STATE OF CALIFORNIA.

REV	DATE	BY	APP	REG NO	EXPIRES	SEAL HOLDER	DESCRIPTION
0	5/30/13	RG	RG	M33848	9/30/13	RONALD B. GOLAY	APPROVED FOR CONSTRUCTION

DESIGNED BY R.GOLAY
DRAWN BY R.GOLAY
CHECKED BY D.HAMILTON
IN CHARGE R.GOLAY
DATE 5/30/13

REGISTERED PROFESSIONAL ENGINEER RONALD B. GOLAY No. M33848 Exp. 09-30-13 MECHANICAL STATE OF CALIFORNIA

Exposition Metro Line Construction Authority
Expo

Exposition Construction Authority Approved for Construction Drawings - AFC

EXPO SKANSKA RADOS

444 South Flower Street
Suite 2200
Los Angeles, CA 90071
TEL (213) 443-7463
FAX (213) 362-9481

PARSONS BRINCKERHOFF JUN 21 2013

CURRENT STATUS

EXPOSITION LRT PROJECT- PHASE 2
COLORADO/4TH STREET STATION
HVAC PLANS

CONTRACT NO XP8902-002
DRAWING NO M-S7-101
REV 0
SCALE AS NOTED
SHEET NO

Golay, Ron 29-May-13 4:23 PM

C:\Users\hernandezh\Desktop\ELECT\S5\expo2-E-C-001.dwg

GENERAL NOTES

1. ALL EQUIPMENT AND MATERIALS SHALL BE NEW AND LISTED BY UNDERWRITER'S LABORATORIES, INC.
2. ALL EQUIPMENT LOCATED OUTDOORS SHALL BE WEATHERPROOF AND 125V RECEPTACLES GFCI PROTECTED.
3. ALL WORK SHALL BE PHASED IN A SCHEDULE TO COINCIDE WITH CONSTRUCTION SCHEDULE.
4. ALL LIGHTING WORK SHALL BE DONE IN COMPLIANCE WITH THE STANDARDS AND REGULATIONS OF THE CALIFORNIA ENERGY COMMISSION.
5. ALL LAMPS SHALL BE FURNISHED AND INSTALLED BY THE CONTRACTOR UNLESS NOTED OTHERWISE.
6. ALL ONE–LAMP OR THREE–LAMP FLUORESCENT FIXTURES SHALL BE TANDEM WIRED WITH TWO–LAMP BALLAST WHERE REQUIRED.
7. SUBMIT SHOP DRAWINGS FOR LIGHTING FIXTURES AND RECEIVE WRITTEN APPROVAL BEFORE ORDERING.
8. ALL EQUIPMENT SHALL HAVE AN INTERRUPTING RATING GREATER THAN THE AVAILABLE SHORT CIRCUIT CURRENT AT THE LINE TERMINALS OF THAT EQUIPMENT BUT NOT LESS THAN THE RATING INDICATED OR 10,000 AMPERES RMS SYMMETRICAL.
9. ALL 120 VOLT, SINGLE PHASE, 20 AMPERE RECEPTACLES INSTALLED WITHIN 6 FEET OF A WATER LOCATION, ELEVATOR AND OR ESCALATOR PIT OR OUTDOORS SHALL HAVE GROUND–FAULT CIRCUIT–INTERRUPTER PROTECTION.
10. PANELS SHALL BE FURNISHED AND INSTALLED AS INDICATED, WITH COPPER BUS AND CIRCUIT BREAKERS OF THE BOLT–IN TYPE, OF MINIMUM 10,000 AMPERES SYMMETRICAL INTERRUPTING CAPACITY. PANELBOARDS SHALL HAVE SCREW SECURED ENGRAVED DESIGNATION PLATES FOR EACH, ON THE PANEL AND 5 INCH BY 8 INCH TYPEWRITTEN DIRECTORY BEHIND A LEXAN COVER ON THE INSIDE OF EACH DOOR. BLANK SPACES SHOWN ON PANEL SCHEDULE DRAWING SHOULD HAVE BUS BARS FOR FUTURE CIRCUIT BREAKER ADDITION.
11. THE SPACE EQUAL TO THE WIDTH (NEC.110.26) OF THE ELECTRICAL EQUIPMENT AND EXTENDING FROM THE FLOOR TO A HEIGHT OF 6 FEET ABOVE THE EQUIPMENT OR TO THE STRUCTURAL CEILING, WHICHEVER IS LOWER, SHALL BE DEDICATED TO THE ELECTRICAL INSTALLATION. NO PIPING, DUCTS, LEAK PROTECTION APPARATUS, OR OTHER EQUIPMENT FOREIGN TO THE ELECTRICAL INSTALLATION SHALL BE LOCATED IN THIS ZONE.
12. ALL WIRING SHALL BE RUN IN GALVANIZED RIGID STEEL CONDUIT, UNLESS NOTED OTHERWISE.
13. ELECTRICAL METALIC TUBING (EMT) MAY BE USED IN ATMOSPHERICAL CONTROLLED ENVIRONMENTS (I.E C/S AND ELEVATOR ROOMS), REF MDC310.5.
14. FLEXIBLE METAL CONDUIT (FMC) STEEL MAY BE USED ON THE CEILINGS OR INSIDE WALLS FOR ALL LIGHTING AND RECEPTACLE BRANCH CIRCUIT WIRING AND FOR SIGNAL WIRING, BUT NOT WHERE SUBJECT TO PHYSICAL DAMAGE OR WATER OR MOISTURE CONDITIONS.
15. PVC CONDUIT MAY BE USED FOR BELOW GRADE WORK AND ENCASED IN SLABS PROVIDED IT IS ENCASED IN A MINIMUM OF 3" INCHES OF CONCRETE. CONDUIT STUB–UPS SHALL BE RIGID GALVANIZED STEEL, MINIMUM 4" HIGH WITH 20mm PVC TAPE. WRAP 2" ABOVE AND FOR FULL LENGTH OF GRS CONDUIT BELOW GRADE.
16. ALL CONDUIT SHALL BE SQUARE CUT, DEBURRED, AND COMPLETELY ASSEMBLED WITH INSULATING BUSHINGS INSTALLED BEFORE PULLING CONDUCTORS. MINIMUM SIZE TO BE 1" EMBEDDED AND 3/4" EXPOSED. PER METRO DESIGN CRITERIA.
17. ALL WIRE AND CABLE SHALL BE COPPER, NO. 12 AWG MINIMUM, UNLESS OTHERWISE INDICATED. INSULATION FOR WIRES SHALL BE TYPE XHHW–2 UNLESS NOTED OTHERWISE.
18. GROUND WIRES ARE NOT GENERALLY INDICATED ON THESE DRAWINGS EXCEPT FOR SPECIFIC SYSTEMS. ALL SYSTEMS SHALL BE PROVIDED WITH GROUNDING AS REQUIRED IN ACCORDANCE WITH NEC SECTION 250 AND REQUIREMENTS OF ALL AUTHORITIES HAVING JURISDICTION.
19. RUN CONDUIT CONCEALED WHEREVER POSSIBLE AND WHERE INDICATED. CONDUIT RUNS AS SHOWN DIAGRAMMATIC ONLY. EXACT ROUTING SHALL BE DETERMINED BY BUILDING STRUCTURE AND EQUIPMENT SERVED.
20. OTHER THAN STAINLESS STEEL ANCHORS MAY BE USED IN ATMOSPHERICAL CONTROLLED ENVIRONMENTS (I.E C/S AND ELEVATOR ROOMS), REF MDC310.5.
21. ELECTRICAL WORK MUST BE CO–ORDINATED WITH THE STRUCTURE AND OTHER ADJACENT EQUIPMENT TO AVOID INTERFERENCES.
22. CONDUITS SHALL BE IDENTIFIED WITH NUMBERS AND TAGGED. IF NO SCHEDULE NUMBER HAS BEEN ASSIGNED USE CIRCUIT NUMBER.
23. STUB–OUTS OF EMBEDDED CONDUITS SHOWN ARE BASED ON APPROXIMATE LOCATIONS OF EQUIPMENT. THE CONTRACTOR IS RESPONSIBLE FOR COORDINATING THE STUB–OUT LOCATION WITH THE EQUIPMENT FURNISHED.
24. FOR LATER CONTRACTS: CONDUITS SHALL BE CAPPED AND TAGGED AT INTERFACE. CONDUCTORS SHALL BE COILED, TAGGED AND PROTECTIVELY WRAPPED AT NEAREST PULL BOX OR JUNCTION BOX. COILED CONDUCTORS TO BE SUFFICIENT LENGTH FOR FUTURE USE (WITH 6' MINIMUM PIGTAIL). CONDUCTORS FOR INTERFACE CONTRACTS SHALL BE ENERGIZED ONLY AFTER CONNECTION TO EQUIPMENT AND SHALL HAVE 6' MINIMUM PIGTAIL. CONDUCTORS FOR THE TVM'S/SAV'S SHALL BE COILED IN THE NEAREST PULL BOX WITH 6' MINIMUM PIGTAIL OR SPARE LENGTH AS NEEDED TO CONNECT TO ACTUAL EQUIPMENT.
25. NOT USED.
26. SPARE TVM'S/SAV'S EMBEDDED CONDUITS SHALL TERMINATE WITH AN EMBEDDED METAL (GRS) FEMALE COUPLING AND FLUSH WITH THE FINISH SURFACE WITH THREADED REMOVABLE METAL PLUG. STUB–UP TO BE GRS CONDUIT.
27. MAINTAIN A MINIMUM CLEARANCE OF 6" BETWEEN COMMUNICATIONS RACEWAYS AND POWER/CONTROL RACEWAYS UNLESS FIELD CONDITION DOES NOT PERMIT.
28. CONTRACTOR SHALL FURNISH, INSTALL AND TERMINATE ELECTRICAL EMBEDDED RACEWAY SYSTEM.
29. CONTRACTOR IS RESPONSIBLE FOR FURNISHING AND INSTALLING ALL EMBEDDED, CONCEALED OR EXPOSED RACEWAYS; AND FOR FURNISHING, INSTALLING, AND PULLING OF ALL CABLES THROUGH RACEWAYS AND TERMINATING AS REQUIRED FOR THE SATISFACTORY OPERATION OF ALL SYSTEMS AND SUBSYSTEMS.
30. ALL ELECTRICAL FACILITIES EQUIPMENT TO BE INSTALLED AND PROVIDED BY FACILITY CONTRACTOR AND SUBCONTRACTOR UNLESS NOTED OTHERWISE.
31. NOT USED.
32. DESIGN INCORPORATES CALIFORNIA CODE OF REGULATIONS TITLE 24 , PART 1 AND 6. AND MANDATORY MEASURES NOTED BELOW.
    a) INDOOR LIGHTING, NOT APPLICABLE
    b) OUTDOOR LIGHTING,
    1) CONTROLS TO TURN OFF THE LIGHTS DURING THE DAY:– ALL PERMANENTLY INSTALLED OUTDOOR LIGHTING MUST BE CONTROLLED BY AUTOELECTRIC SWITCH OR ASTRONOMICAL TIME SWITCH THAT AUTOMATICALLY TURNS OFF THE OUTDOOR LIGHTING WHEN DAYLIGHT IS AVAILABLE (SECTION 132).
    2) CONTROLS TO PROVIDE THE OPTION TO TURN OFF A PORTION OF THE LIGHTS: FOR LIGHTING OF BUILDING FACADES, PARKING LOTS, GARAGES, SALES AND NON SALES CANOPIES AND ALL OUTDOOR SALES AREAS, AUTOMATIC CONTROLS ARE REQUIRED TO PROVIDE THE OWNER WITH THE ABILITY TO TURN OFF THE LIGHTING OR TO REDUCE THE LIGHTING POWER BY AT LEAST 50% BUT NOT EXCEEDING 80% WHEN THE LIGHTING IS NOT NEEDED (SECTION 132).
    3) INSTALLED POWER HAS BEEN DETERMINED IN ACCORDANCE WITH SECTION 130.
    4) CONTROLS FOR INEFFICIENT LIGHTING SYSTEMS, NOT APPLICABLE.
    c) SIGN LIGHTING,
    1) PHOTO CONTROL OR OUTDOOR ASTRONOMICAL TIME SWITCH: ALL OUTDOOR SIGN SHALL BE CONTROLLED WITH A PHOTO CONTROL OR OUTDOOR ASTRONOMICAL TIME SWITCH CONTROL UNLESS EXEMPTED FROM THE EXCEPTIONS. SEE SECTION 133(a)2
33. FOR ALL COMMUNICATION SYSTEM LOAD CALCULATIONS SIZES, SEE FINAL B&C COMMUNICATIONS STATION SUBMITTAL PACKAGE. ALL CONDUIT SIZES ARE BASED ON MINIMUM SIZES PER METRO DESIGN CRITERIA. INSTALLATION CONTRACTOR SHALL OBTAIN CURRENT COMMUNICATION SYSTEMS PACKAGE AND COORDINATE PRIOR TO EQUIPMENT INSTALLATION.
34. FOR ALL FIRE SYSTEMS LOAD CALCULATIONS SIZES, SEE FIRE SYSTEM DESIGNER STATION SUBMITTAL PACKAGE. ALL CONDUIT SIZES ARE BASED ON MINIMUM SIZES PER METRO DESIGN CRITERIA. INSTALLATION CONTRACTOR SHALL OBTAIN CURRENT FIRE SYSTEMS PACKAGE AND COORDINATE PRIOR TO EQUIPMENT INSTALLATION.

PVC CONDUIT AT ALL STATION UTILITY AND C/S ROOMS MAY BE INSTALLED BY RUNNING A PVC RISER IN THE CONCRETE SLAB AND PLACING A GRS COUPLING FLUSH WITH THE TOP OF THE CONCRETE SLAB . (DRFI 10555)

ADD:
LIQUID TIGHT FLEXIBLE METAL CONDUIT (LFMC) MAY ALSO BE USED FOR UNDER PLATFORM CRAWL SPACES. (AT PRESENT THE ONLY TYPE OF LFMC THAT CAN BE USED ON THE PROJECT IS TYPE ZHLA-NON-HALOGEN, LOW SMOKE, FLAME RETARDANT). (DRFI 11049)

ELECTRICAL SYMBOL LIST

Symbol	Description
S	SINGLE-POLE SWITCH
	MOLDED CASE CIRCUIT BREAKER
	SINGLE LINE DIAGRAM SHIELDED TRANSFORMER
	GROUNDING
	LIGHTING OR PANEL PANELBOARD
	HARDSCAPE PULL BOX OR HANDHOLE
ϕ	PHASE
(P)	CEILING OR FLOOR MOUNTED PULL BOX
(P)	WALL MOUNTED PULL BOX
(J)	EQUIPMENT JUNCTION BOX – CEILING MOUNTED
[J]	EQUIPMENT JUNCTION BOX – FLOOR MOUNTED
(J)	EQUIPMENT JUNCTION BOX – WALL MOUNTED
GFI / WP	DUPLEX RECEPTACLE FLUSH WALL OR SURFACE MOUNTED 20A – 120V. UON– S.O. DENOTES SPLIT OUTLETS GFI SUFFIX DENOTES GROUND FAULT CURRENT INTERRUPT WP SUFFIX DENOTES WEATHERPROOF
	DUPLEX RECEPTACLE STUB MOUNTED ON CONDUIT SUPPORT
[F]	FUSED DISCONNECT
ST	MANUAL STARTER WITH THERMAL OVERLOAD.
T	DRY TYPE DISTRIBUTION TRANSFORMER 480V,3ø, 3W TO 120/208V, 3ø, 4W, U.O.N.
TYPE / WATTS	LIGHTING EQUIPMENT DESIGNATION
	GROUND BUS
(OS)	OCCUPANCY SENSOR - WALL MOUNTED
(D)	LED LIGHT FIXTURE DRIVER
(OS)	OCCUPANCY SENSOR CEILING MOUNT
	RACEWAY EMBEDDED IN FLOOR OR ON WALL BENEATH PLATFORM. NOT EXPOSED.
EPL-C 7,9	BRANCH CIRCUIT HOME RUN TO PANELBOARD. EPL-C IDENTIFY CIRCUIT NUMBERS 7 AND 9
PHASE / NEUTRAL / GROUND	CROSS LINES INDICATE NUMBER OF NO. 12 AWG WIRES (PHASE,NEUTRAL & GROUND WIRES) EXAMPLE :-CROSS LINES INDICATE 2 #12 AWG WIRES (PHASE & NEUTRAL) AND 1 #12 AWG & GROUND WIRE. UNLESS OTHERWISE NOTED. #10 INDICATES NO 10 AWG PHASE AND NEUTRAL WIRES. USE NO.10 AWG PHASE AND NEUTRAL WIRES FOR ALL BRANCH CIRCUITING WITH OVER 6 PHASE CONDUCTORS.
3C #12 WIRE	INDICATES, 3 SINGLE CONDUCTOR #12 AWG WIRE
4C #4 CABLE	INDICATES 4 CORE NUMBER 4 AWG MULTICONDUCTOR CABLE
	CONDUCTORS, CONNECTED
	CONDUCTORS, NOT CONNECTED
	FLEXIBLE RACEWAY CONNECTION
— GND —	TW GREEN INSULATED GROUND WIRE
G — G	EXOTHERMIC WELD CONNECTION
— G —	EXPOSED BARE GROUNDING CONDUCTOR
– – G – –	EMBEDDED BARE COPPER GROUND WIRE
	TEST POINT/ACCESSABLE GROUND WELL (E-C-004 DETAIL D)
(G)	INACCESSABLE GROUND ROD (E-C-004 DETAIL B)
	CONDUIT UP
	CONDUIT DOWN
	CAPPED CONDUIT
OCS	OVERHEAD CATENARY SYSTEM
MTS	MANUAL TRANSFER SWITCH
	FIRE ALARM HORN OR STROBE
(PS)	FIRE ALARM PULL STATION
(S)	FIRE ALARM SMOKE DETECTOR

ABBREVIATIONS

A	AMPERE
ACU	AIR CONDITIONING UNIT
AFF	ABOVE FINISHED FLOOR OR WALKWAY
AIC	AMPERES INTERRUPTING CAPACITY
BC	BARE COPPER
BKR	BREAKER
C	CONDUIT
CCTV	CLOSED CIRCUIT TELEVISION
CONC	CONCRETE
CO	CONDUIT ONLY
CIC	COMMUNICATION INTERFACE CABINET
CKT	CIRCUIT
CB	CIRCUIT BREAKER
CL	CENTERLINE
CLG	CEILING
COMM	COMMUNICATIONS
CONT	CONTROL
CONTD	CONTINUED
C&S	COMMUNICATIONS AND SIGNALING
CP	CANDLE POWER
CPL	CRITICAL POWER PANEL
DISC	DISCONNECT
DWG	DRAWING
DP	DISTRIBUTION PANEL
EA	EACH
EC	EMPTY CONDUIT
EF	EXHAUST FAN
EL	ELEVATION
ELEV	ELEVATOR
EMERG	EMERGENCY
EMLCA	EXPOSITION METRO LINE CONSTRUCTION AUTHORITY
EPL	ESSENTIAL POWER PANEL
EQUIP	EQUIPMENT
ETS	EMERGENCY TRIP STATION
F	FLUSH
FC	FOOT CANDLE
FF	FINISHED FLOOR
FLR	FLOOR
FLUOR	FLUORSCENT
FT	FOOT
GALV	GALVANIZED
G	GROUND
GFI	GROUND FAULT INTERRUPTER
GND	GROUNDING
GRS	GALVANIZED RIGID STEEL CONDUIT
HH	HANDHOLE
H.O.A	HAND OFF AUTO
HP	HORSEPOWER
IES	ILLUMINATING ENGINEERING SOCIETY
IMC	INTERMEDIATE METAL CONDUIT
INC	INCOMING
J	JUNCTION BOX
K	KILO
KV	KILOVOLT
KVA	KILOVOLT AMPERE
KW	KILOWATT
LADWP	LOS ANGELES DEPARTMENT OF WATER & POWER
LAFD	LOS ANGELES FIRE DEPARTMENT
LED	LIGHT-EMITTING DIODE
LP	LIGHTING PANEL
LTG	LIGHTING
MB	MAIN BREAKER
MCP	MOTOR CIRCUIT PROTECTOR
MES	MAIN ELECTRICAL SERVICE
MECH	MECHANICAL
MLO	MAIN LUGS ONLY
MAINT	MAINTENANCE
MFR	MANUFACTURER
MGB	MASTER GROUND BUS
MH	MANHOLE
MTD	MOUNTED
MTG	MOUTING
NC	NORMALLY CLOSED
NEC	NATIONAL ELECTRICAL CODE
NEMA	NATIONAL ELECTRICAL MANUFACTURERS ASSOCIATION
NIC	NOT IN CONTRACT
NM	NON-METALLIC
NMC	NON-METALLIC CONDUIT
NO	NORMALLY OPEN
NTS	NOT TO SCALE
OC	ON CENTER
OS	OCCUPANCY SENSOR
P	POLE
PA	PUBLIC ADDRESS
PB	PULL BOX
PH OR ℄	PHASE
PTEL	PASSENGER ASSISTANCE TELEPHONE
PVC	POLYVINYL CHLORIDE
PWR	POWER
R	RECESSED
RCPT	RECEPTACLE
RM	ROOM
SAV	STAND ALONE VALIDATOR
SDS	SEISMIC DETECTION SYSTEM
SPDT	SINGLE POLE DOUBLE THROW
SPST	SINGLE POLE SINGLE THROW
SS	STAINLESS STEEL
STA	STATION
STL	STEEL
SUP	SUPPLY
SW	SWITCH
T	TRANSFORMER
TBD	TO BE DETERMINED
TC	TRAIN CONTROL
TEL	TELEPHONE
TOR	TOP OF RAIL
TS	THERMAL SWITCH
TVM	TICKET VENDING MACHINE
TVSS	TRANSIENT VOLTAGE SURGE SUPRESSOR
TYP	TYPICAL
UFS	UNIVERSAL FARE SYSTEM
UG	UNDERGROUND
UNO	UNLESS NOTED OTHERWISE
UPS	UNINTERRUPTABLE POWER SYSTEM
V	VOLT
VA	VOLT AMPERE
VENT	VENTILATION
VMS	VARIABLE MESSAGE SIGN
VT	VAPORTIGHT
WP	WEATHERPROOF
W	WATT
W/	WITH
W/O	WITHOUT
XFMR	TRANSFORMER
XFER	TRANSFER

SRJV
FEB 01 2013
ISSUED FOR CONSTRUCTION

THE PREPARATION OF THIS DRAWING HAS BEEN FINANCED BY THE TAXES OF THE CITIZENS OF LOS ANGELES COUNTY AND OF THE STATE OF CALIFORNIA.

REV	DATE	BY	APP	REG NO	EXPIRES	SEAL HOLDER	DESCRIPTION
0	1/24/13	DH	IRV	E12619	9/30/13	IAN R. VARLEY	APPROVED FOR CONSTRUCTION

DESIGNED BY I. VARLEY
DRAWN BY E. CANTILLER
CHECKED BY D. HAMILTON
IN CHARGE I. VARLEY
DATE 1/24/13

REGISTERED PROFESSIONAL ENGINEER — IAN R. VARLEY — No. E12619 — Exp. 09-30-13 — ELECTRICAL — STATE OF CALIFORNIA

Exposition Metro Line Construction Authority
Expo

EXPO SKANSKA RADOS
444 South Flower Street
Suite 2200
Los Angeles, CA 90071
TEL (213) 443-7463
FAX (213) 362-9481

Exposition Construction Authority Approved for Construction Drawings - AFC
PARSONS BRINCKERHOFF JAN 31 2013

CURRENT STATUS

EXPOSITION LRT PROJECT- PHASE 2
COMMON ELECTRICAL
GENERAL NOTES, SYMBOLS
AND ABBREVIATIONS

CONTRACT NO XP8902-002
DRAWING NO E-C-001
REV 0
SCALE NONE
SHEET NO

Hernandez, Hector L. 4:33 PM 24-Jan-13

A-2 120V, POLE MOUNTED, 1 LAMP FLUORESCENT 54 WATT G5HO, MANUF. SYSTEMPARK LINE 130, 11'-6" SUPPORT POLE, LOCATION 4TH STREET PLAZA
A-3 120V, POLE MOUNTED, 2 LAMP FLUORESCENT 54 WATT G5HO, MANUF. SYSTEMPARK LINE 130, 11'-6" SUPPORT POLE, LOCATION 4TH STREET PLAZA

DRFI 10725

LIGHTING FIXTURE WORSE CASE POINT SOURCE LIGHTING CALCULATIONS

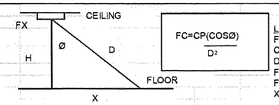

$$FC = \frac{CP(\cos Ø)}{D^2}$$

LEGEND:
FX FIXTURE TAG
CP FX CANDLE POWER AT ANGLE Ø
D FEET FROM CENTER OF FX FIXTURE TO FLOOR
FC FOOTCANDLES
X DISTANCE BETWEEN LIGHT FIXTURES

	FIXTURE ID	DESCRIPTION	HORIZONTAL DISTANCE 'X' (FEET) MIDPOINT BETWEEN FIXTURES	HIEGHT 'H' (FEET)	VECTOR DISTANCE 'D' FEET	D^2 (FT^2)	ANGLE Ø (DEGREES)	COS(Ø)	CANDLE-POWER (NOTE 1)	TYPICAL FIXTURE CALCULATION ORIENTATION	INITIAL FOOTCANDLES	DERATING FACTOR	SINGLE FIXTURE CONTRIBUTION FOOTCANDLES	TWO FIXTURE CONTRIBUTION FOOTCANDLES
PLATFORM AT RAINHOOD	CWM-1	CRITICAL POWER LIGHTS FIXTURE (NOTE 2)	18.0	8.0	19.7	388.0	66.0	0.41	4785	POINT	5.01	0.7	3.51	7.01
	X-6B	ESSENTIAL POWER RAINHOOD LIGHT FIXTURE	1.0	9.0	9.1	82.0	6.3	0.99	428	PARALLEL	5.19	0.7	3.63	7.26
PLATFORM BETWEEN RAINHOODS	CWM-1	CRITICAL POWER LIGHTS FIXTURE	8.0	8.0	11.3	128.0	45.0	0.71	4785	POINT	26.43	0.7	18.50	37.01
26TH St WALKWAY ENTRY RAMP, NARROW PART 9'-6", (AT EXIT)	Z-1	CRITICAL POWER HANDRAIL LIGHT FIXTURE	4.8	3.0	5.6	31.6	57.7	0.53	334	PARALLEL	5.65	0.7	3.96	7.91
26th St WALKWAY ENTRY RAMP, WIDE PART 19' (AT ENTRANCE)	Z-1	CRITICAL POWER HANDRAIL LIGHT FIXTURE	7.0	3.0	7.6	58.0	66.8	0.39	213.6	PARALLEL	1.45	0.7	1.02	2.03
TICKETING AREA AT AT GRADE STATIONS	PF-1	CRITICAL POWER LIGHT FIXTURE	8.5	11.5	8.5	72.3	36.5	0.80	1300	POINT	14.47	0.7	10.13	20.26
	X-6A	ESSENTIAL POWER RAINHOOD LIGHT FIXTURE	1.0	9.0	9.1	82.0	6.3	0.99	428	PARALLEL	5.19	0.7	3.63	7.26
C/S ROOM	S-1	CRITICAL POWER 1'X4' FLUORESCENT	2.3	9.0	9.3	86.1	14.0	0.97	626	PERPENDICULAR	7.06	0.9	6.37	12.74
ENTRY STAIRS AT NATIONAL PALMS	Z-1	CRITICAL POWER HANDRAIL LIGHT FIXTURE	2.0	3.0	3.6	13.0	33.7	0.83	469	PARALLEL	30.02	0.7	21.01	42.02
ENTRY STAIRS AT SEPULVEDA & BUNDY	Z-1	CRITICAL POWER HANDRAIL LIGHT FIXTURE	2.8	3.0	4.1	16.6	42.5	0.74	431	PARALLEL	19.18	0.7	13.43	26.86
STREET ENTRY PLAZA AT NATIONAL PALMS	Z-2	CRITICAL POWER 36" LINEAR LED 60 DEGEE	5.5	15.0	16.0	255.3	20.1	0.94	900	PERPENDICULAR	3.31	0.9	2.98	5.96
17th ST PARKING LOT	A-1	ESSENTIAL POWER	35.0	20.0	40.3	1625.0	60.3	0.50	1900	PERPENDICULAR	0.58	0.9	0.52	1.04
														SINGLE FIXTURE CONTRIBUTION FOOTCANDLES
STREET ENTRY PLAZA AT SEPULVEDA & BUNDY	Z-2	CRITICAL POWER 36" LINEAR LED 60 DEGEE	24.0	21.0	31.9	1017.0	48.8	0.66	220	PERPENDICULAR	0.14	0.9	0.13	0.13

LIGHTING FIXTURE SCHEDULE

NAME	SYMBOL	VOLT	NUMBER OF LAMPS	LAMP TYPE	MOUNTING	MANUF./CAT. NUMBER	LOCATION	TOTAL WATTS
A-1		120	1	250	POLE	KIM LIGHTING, 'ARCHETYPE AR', 250W METAL HALIDE, TYPE AR3 LIGHT DISTRIBUTION, CUSTOM COLOR, 20FT SUPPORT POLE WITH ONE FIXTURE CAT # ARCHETYPE-1A-AR3-250PMH-120-CC	17TH ST STN PARKING LOT	250
B-1		120	1	LED	BOLLARD	DESIGNPLAN LIGHTING, 'TALIA' 560mm, DOUBLE EMISSION 10W SMD LED, COOL WHITE LED, CUSTOM COLOR CAT # 503003	GRADE LEVEL BOLLARDS	10
B-3		120	1	28WCFL	GUARDRAIL	METALUMEN, STRIPLIGHT CAT # OV2-PL-40-B-01 (CUSTOM FIXTURE REF ARCH DWG A-C-635)	PLATFORMS GAURD RAIL	32
CWM-1		120	1	100WMH	RAINCANOPY SUPPORT POST	WINDIRECT, KNUCKLE MOUNTED, REMOTE BALLAST METAL HALIDE CAT # P2-LSW-MH100-120-LSI-CPF-QR-MOD (CUSTOM FIXTURE ADD TO CAT # METRO-DK-A123)	PLATFORM BENCHES & VMS POLES	118
M		–	1	LED	SURFACE	CARMANAH, DECORATIVE LIGHT, PHOTOVOLTAIC BLUE LENS CAT # M502	ONTOP OF PLATFORM GUARD RAILING	–
O-10		120	1	70WMH	RAINCANOPY SUPPORT POST	WINDIRECT, KNUCKLE MOUNTED, REMOTE BALLAST METAL HALIDE CAT # P2-LSW-MH70-120-LSI-CPF-QR-MOD (CUSTOM FIXTURE ADD TO CAT # METRO-DK-A123)	PLATFORM BENCHES & VMS POLES	86
O-23A		120	1	LED	FLUSH FLOOR MOUNTED	ALLSCAPE LIGHTING, INGRADE HARDSCAPE LED 25W UPLIGHT,WALLWASH,COLORED GLASS FILTER,IP67/NEMA 4 CAT # SL-23-25WW-CUS3-120-45WW-F-BK-GF	ELEVATOR UPLIGHT (IN PIT)	25
O-23B		120	1	LED	SURFACE	LIGHTING & ELECTRONIC DESIGN, LED VIVID WASH 1 RED/GREEN/BLUE, 25W, IP65/NEMA 3 WITH INTEGRAL PUSH BUTTONS FOR SETTING COLOR CAT # LW-320x130-WP-UB	ELEVATOR DOWNLIGHT (IN CEILING)	25
O-23C		120	1	INCAN-DESCENT	SURFACE	CROUSE HINDS, 'V' SERIES ENCLOSED AND GASKETED INCANDESCENT LUMINAIRE. SUITABLE FOR INDUSTRIAL LOCATIONS WITH PLAIN GLOBE, GUARD & SIDE ENTRY CONDUIT, NEMA 4. CAT # VJ-2759	ELEVATOR MAINTENANCE LIGHT (IN PIT)	100
O-23D		120	1	LED	ELEVATOR RAIN CANOPY	ECLIPSE LIGHTING QUEST 1 SERIES CAT QE1-LED15-4K-120-CC-9002		15
S-1		120	1	F32T8	SURFACE	LITHONIA LIGHTING, CAT # CB-1-32-120-GEB10IS	INTERNAL TO C/S ROOM	40
S-1A		120	2	F32T8	SURFACE	LITHONIA LIGHTING, CAT # CB-2-32-120-GEB10IS	INTERNAL TO C/S ROOM & ELEC. ROOM	80
S-2		120	1	70WMH	SURFACE	LITHONIA LIGHTING, WSQ SERIES, METAL HALIDE, INTERNAL BALLAST, SURFACE MOUNT CAT # WSQ-70M-FT-120-HI POWER FACTOR BALLAST-BBW-SF-DNAT-HPI	EXTERNAL TO C/S ROOMS TOS BUILDING	86
PF-1		120	1	70WMH	POLE	KIM LIGHTING, OUTDOOR TUBE SYSTEM, LIGHT FIXTURE CAT # 1A-OTS600-70PMH120-CCP (SUPPORT POLE TO BE COORDINATED WITH STRUCTURAL DRAWINGS # S-S2-124, S-S5-124 & S-S6-124)	RAIN CANOPY	86
R-20		120	1	39WT4 MH	FLUSH FLOOR MOUNTED	BEGA LIGHTING, DRIVE OVER INGRADE FLOODLIGHT WITH ANTI SKID LOW SURFACE TEMPERATURE LENS CAT # 8750MH-R	ENTRY ARCHWAY UPLIGHT & PLAZA UPLIGHT	44
X-6A		120	1	F25WT8	CUSTOM	PRIMUS LIGHTING, 3' FLUORESCENT, CAT # ALX2-RLR-WL-T8-25W-C-120V-RF-W-38	INTERNAL TO RAIN SHIELD	30W
X-6B		120	1	F32WT8	CUSTOM	PRIMUS LIGHTING, 4' FLUORESCENT, CAT # ALX2-RLR-WL-T8-32W-C-120V-RF-W-50	INTERNAL TO RAIN SHIELD	40W
X-6C		120	1	F40WT8	CUSTOM	PRIMUS LIGHTING, 5' FLUORESCENT, CAT # ALX2-RLR-WL-T8-40W-C-120V-RF-W-62	INTERNAL TO RAIN SHIELD	50W
Z-1	—LED—	120	AS NEEDED	LED	HANDRAIL	WAGNER/i2 SYSTEMS CUSTOM LED LIGHTED HANDRAIL CAT# LULR 17743 C7126 CK185 i2 S1205A X8A WITH INTEGRAL LED DRIVER & PHILIPS POWER SUPPLY #PS24V75W-E05PW (CUSTOM FIXTURE REF ARCH DWG A-A-630)	INTERNAL TO HAND RAILS	100W EACH DRIVER
Z-2	—LED—	120	AS NEEDED	LED	COVE	IO LIGHTING, LINE 2.0 LED STRIPLIGHT,VERY HI OUTPUT CAT # O-05V2-E-3K-60-100-2-72-120 WITH REMOTE DRIVER (CAT # DR200AM) (CUSTOM FIXTURE REF ARCH DWG A-A-625)	ENTRY PLAZA BRIDGE	200W EACH DRIVER
Z-3	—LED—	120	1	LED	COVE	IO LIGHTING, LINE 1.5 LED STRIPLIGHT, STANDARD OUTPUT CAT # O-10-E-3K-10-100-2-18-5-1 WITH REMOTE DRIVER (CAT # DR200AM)	ENTRY ARCHWAY SIGN	~~200W~~ EACH DRIVER

NOTE: FIXTURES CWM-1, S-1, B-3, PF-1, Z-1 & Z-3 ARE EMERGENCY FIXTURES.

(DRFI 10424)

1

2

DRFI 10725

100W (DRFI 10704)

GENERAL NOTES:

1. PROVIDE ALL LIGHTING FIXTURES AS SHOWN COMPLETE WITH LAMPS, COMPLETELY WIRED, CONTROLLED AND SECURELY ATTACHED SUPPORTS.
2. AT THE COMPLETION OF CONSTRUCTION, CLEAN LENSES AND REFLECTORS OF ALL LIGHTING FIXTURES SO AS TO RENDER THEM FREE OF ANY MATERIAL, SUBSTANCE OR FILM FOREIGN TO THE FIXTURE.
3. THE MANUFACTURER'S NAMES AND CATALOG NUMBERS ARE SHOWN FOR REFERENCE ONLY. CONTRACTOR SHALL PROVIDE CATALOG CUTS FOR ALL FIXTURES TO EOR FOR APPROVAL BEFORE THEY PROCEED WITH PURCHASE.
4. FOR COMMUNICATIONS COORDINATION REFERENCE NOTE 33 OF GENERAL NOTES ON DRAWING E-C-001.
5. ALL FIXTURE WATTAGES PER MANUFACTURER'S DATA TOTAL 5 FT CANDLES.

KEYNOTE:

1. ILLUMINATION LEVEL SUPPLEMENTED BY STREET LIGHTS.
2. AT SEPULVEDA AND BUNDY PLATFORMS ONLY

SRJV
FEB 01 2013
ISSUED FOR CONSTRUCTION

THE PREPARATION OF THIS DRAWING HAS BEEN FINANCED BY THE TAXES OF THE CITIZENS OF LOS ANGELES COUNTY AND OF THE STATE OF CALIFORNIA.

REV	DATE	BY	APP	REG NO	EXPIRES	SEAL HOLDER	DESCRIPTION
0	1/24/13	DH	IRV	E12619	9/30/13	IAN R. VARLEY	APPROVED FOR CONSTRUCTION

DESIGNED BY I. VARLEY
DRAWN BY E. CANTILLER
CHECKED BY D. HAMILTON
IN CHARGE I. VARLEY
DATE 1/24/13

REGISTERED PROFESSIONAL ENGINEER — IAN R. VARLEY — No. E12619 — Exp. 09-30-13 — ELECTRICAL — STATE OF CALIFORNIA

Exposition Metro Line Construction Authority
Expo
Exposition Construction Authority Approved for Construction Drawings - AFC
EXPO SKANSKA RADOS
444 South Flower Street
Suite 2200
Los Angeles, CA 90071
TEL (213) 443-7463
FAX (213) 362-9481
PARSONS BRINCKERHOFF
JAN 31 2013
CURRENT STATUS

EXPOSITION LRT PROJECT- PHASE 2
COMMON ELECTRICAL
LIGHT FIXTURE
SCHEDULE

CONTRACT NO XP8902-002
DRAWING NO E-C-002
REV 0
SCALE NONE
SHEET NO

C:\Users\hernandezh\Desktop\ELECTRS\lexpo2-E-C-002.dwg
24-Jan-13 4:33 PM Hernandez, Hector L.

EQUIPMENT & COMMUNICATION SYMBOLS

LEGEND:

1	CCTV CAMERA	
2	PA LOUDSPEAKER	
3	VMS LED (VISUAL MESSAGES SIGN)	
4	PASSENGER ASSISTANCE TELEPHONE (PTEL)	
5	EMERGENCY TELEPHONE (ETEL)	
6	BLUE LIGHT STATION (BLS)	
7	EMERGENCY MANAGEMENT PANEL (EMP)	
8	CARD READER	
9	TICKET VENDING MACHINE (TVM)	UFS SYSTEM
10	STANDALONE VALIDATOR (SAV) OR FAREGATE	UFS SYSTEM
11	INTRUSION DETECTION (DOOR OR GATE CONTACT)	
12	SPARE	
13	ADMINISTRATIVE TELEPHONE (ATEL)	
14	PUBLIC TELEPHONE, PAY PHONE (PT)	
15	GATE TELEPHONES (GTEL)	
16	MAINTENANCE TELEPHONE (MTEL)	
17	ELEVATOR TELEPHONE (LTEL)	
18	FIRE ALARM HORN & STROBE	FIRE ALARM SYSTEM
19	SMOKE DETECTOR	FIRE ALARM SYSTEM
20	PULL STATION	FIRE ALARM SYSTEM
21	HEAT DETECTOR	FIRE ALARM SYSTEM
22	CONTROL RELAY	FIRE ALARM SYSTEM
23	LCD SIGN	

NOTE:

1. FOR COMMUNICATIONS COORDINATION REFERENCE NOTE 33 OF GENERAL NOTES ON DRAWING E-C-001.

SRJV
FEB 01 2013
ISSUED FOR CONSTRUCTION

THE PREPARATION OF THIS DRAWING HAS BEEN FINANCED BY THE TAXES OF THE CITIZENS OF LOS ANGELES COUNTY AND OF THE STATE OF CALIFORNIA.

REV	DATE	BY	APP	REG NO	EXPIRES	SEAL HOLDER	DESCRIPTION
0	1/24/13	DH	IRV	E12619	9/30/13	IAN R. VARLEY	APPROVED FOR CONSTRUCTION

DESIGNED BY I. VARLEY
DRAWN BY E. CANTILLER
CHECKED BY D. HAMILTON
IN CHARGE I. VARLEY
DATE 1/24/13

REGISTERED PROFESSIONAL ENGINEER
IAN R. VARLEY
No. E12619
Exp. 09-30-13
ELECTRICAL
STATE OF CALIFORNIA

Exposition Metro Line Construction Authority
Expo

Exposition Construction Authority
Approved for Construction
Drawings—AFC
JAN 31 2013

EXPO SKANSKA RADOS

444 South Flower Street
Suite 2200
Los Angeles, CA 90071
TEL (213) 443-7463
FAX (213) 362-9481

PARSONS BRINCKERHOFF

CURRENT STATUS

EXPOSITION LRT PROJECT- PHASE 2
COMMON ELECTRICAL
LIGHTING & EQUIP. INSTALLATION
SYMBOLS & GENERAL NOTES

CONTRACT NO XP8902-002
DRAWING NO E-C-003
REV 0
SCALE NONE
SHEET NO

C:\Users\hernandezh\Desktop\ELECTISS\expo2-E-C-003.dwg
Hernandez, Hector L. 4:33 PM 24-Jan-13

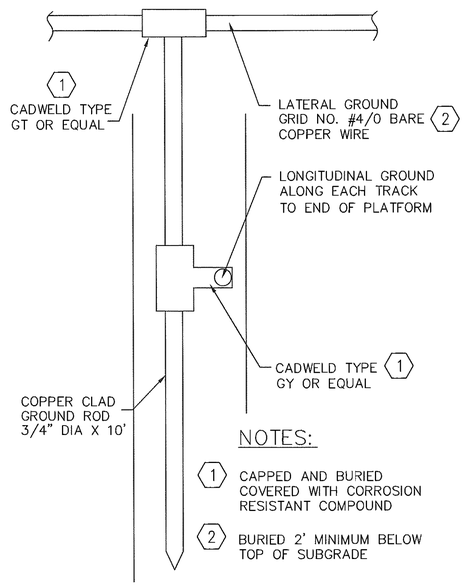

NOTES:

1. CAPPED AND BURIED COVERED WITH CORROSION RESISTANT COMPOUND
2. BURIED 2' MINIMUM BELOW TOP OF SUBGRADE

INACCESSIBLE GROUND ROD (B)

NO SCALE — E-C-004

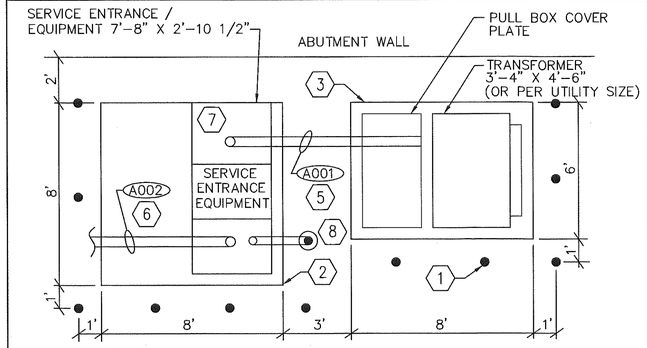

NOTES:

1. TRAFFIC BOLLARDS SPACE 45" ~ 48" APART.
2. SUPPORT PAD FOR SERVICE ENTRANCE EQUIPMENT 8' X 8'.
3. PREFABRICATED PULL BOX FOR TRANSFORMER 8' X 6' PER DWP UB-721-03.
4. OVERALL SPACE NEEDED 21' X 9' SETBACK 2' FROM WALL.
5. CONDUIT PER DWP SIZE AND SPEC, REF FEEDER SCHEDUL FOR SIZE.
6. CONDUIT TO MANUAL TRANSFER SWITCH REF. FEEDER SCHEDULE FOR SIZE.
7. SERVICE ENTRANCE EQUIPMENT 400A, 480V, 3 PHASE, 4W, & NEMA 3R.
8. UTILITY GROUND ROD AND BOX, PER UTILITY STANDARDS.

SERVICE ENTRANCE EQUIPMENT LAYOUT AERIAL STATIONS (400 AMP SERVICE) (C)

NO SCALE — E-C-004

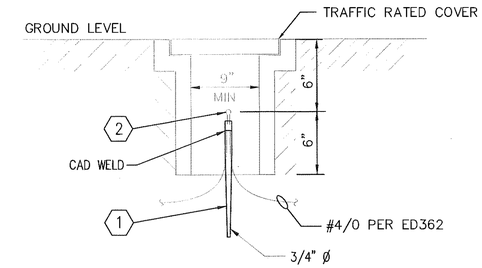

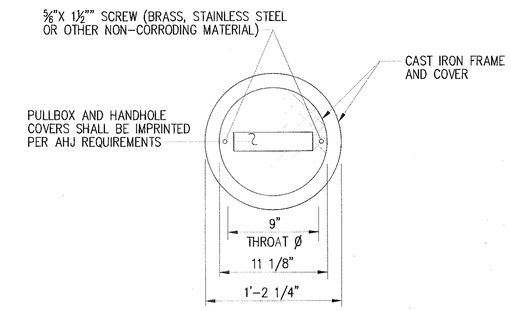

PLAN

NOTES:

1. GROUND ROD.
2. ACCESSIBLE TEST POINT.

TEST POINT/ACCESSIBLE GROUND ROD AND HANDHOLE (D)

NO SCALE — E-C-004

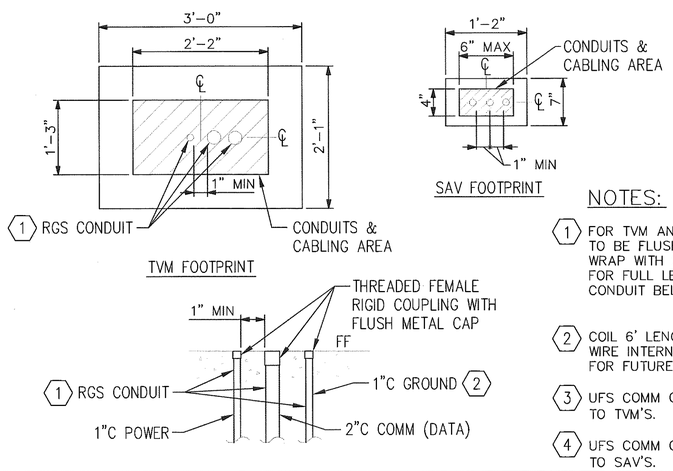

NOTES:

1. FOR TVM AND SAV. CONDUITS TO BE FLUSH WITH GRADE. TO WRAP WITH 20mm PVC TAPE FOR FULL LENGTH OF GRS CONDUIT BELOW GRADE.
2. COIL 6' LENGTH OF GROUND WIRE INTERNAL TO CONDUIT FOR FUTURE TVM OR SAV.
3. UFS COMM CONDUIT TO BE 2" TO TVM'S.
4. UFS COMM CONDUIT TO BE 4" 2" TO SAV'S. (DRFI 10542)

TVM & SAV CONDUIT INSTALLATION (E)

NO SCALE — E-C-004

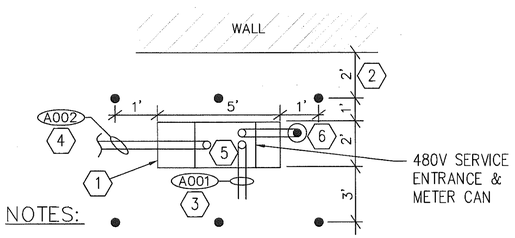

NOTES:

1. SUPPORT PAD FOR SERVICE ENTRANCE EQUIPMENT 2' X 5'.
2. OVERALL SPACE NEEDED 6' X 7', SETBACK 2' FROM ANY NEARBY WALL.
3. CONDUIT PER UTILITY SIZE AND SPECIFICATION REF. FEEDER SCHEDULE.
4. CONDUIT TO MANUAL TRANSFER SWITCH REF. FEEDER SCHEDULE FOR SIZE.
5. SERVICE ENTRANCE EQUIPMENT 1'-8" W X 1'-4 1/2" D X 4' H 200A, 480V, 3 PHASE, & 4W, NEMA 3R.
6. UTILITY GROUND ROD AND BOX, PER UTILITY STANDARDS.

SERVICE ENTRANCE EQUIPMENT AT GRADE STATION (200 AMP SERVICE) (F)

NO SCALE — E-C-004

NOTE:

1. FOR COMMUNICATIONS COORDINATION REFERENCE NOTE 33 OF GENERAL NOTES ON DRAWING E-C-001.

KEYNOTE:

1. NOT USED - DETAIL A ON THIS DRAWING.

SRJV
FEB 01 2013
ISSUED FOR CONSTRUCTION

THE PREPARATION OF THIS DRAWING HAS BEEN FINANCED BY THE TAXES OF THE CITIZENS OF LOS ANGELES COUNTY AND OF THE STATE OF CALIFORNIA.

REV	DATE	BY	APP	REG NO	EXPIRES	SEAL HOLDER	DESCRIPTION
0	1/24/13	DH	IRV	E12619	9/30/13	IAN R. VARLEY	APPROVED FOR CONSTRUCTION

DESIGNED BY I. VARLEY
DRAWN BY E. CANTILLER
CHECKED BY D. HAMILTON
IN CHARGE I. VARLEY
DATE 1/24/13

REGISTERED PROFESSIONAL ENGINEER — IAN R. VARLEY — No. E12619 — Exp. 09-30-13 — ELECTRICAL — STATE OF CALIFORNIA

Exposition Metro Line Construction Authority
Expo
Exposition Construction Authority Approved for Construction Drawings - AFC
EXPO SKANSKA RADOS
444 South Flower Street
Suite 2200
Los Angeles, CA 90071
TEL (213) 443-7463
FAX (213) 362-9481
PARSONS BRINCKERHOFF
JAN 31 2013
CURRENT STATUS

EXPOSITION LRT PROJECT- PHASE 2
COMMON ELECTRICAL
ELECTRICAL DETAILS

CONTRACT NO XP8902-002
DRAWING NO E-C-004
REV 0
SCALE NONE
SHEET NO

C:\projectwise\pb\projectwise\introchrisguezd\dms09026\expo2-E-C-004.dwg
31-Jan-13 1:53 PM Rodriguez, Dennis

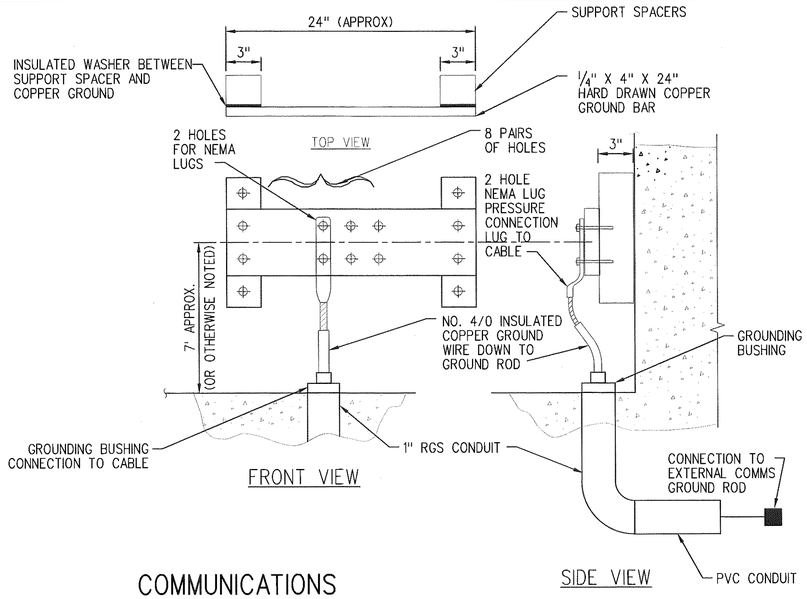

COMMUNICATIONS GROUND BUS

A
E-C-007

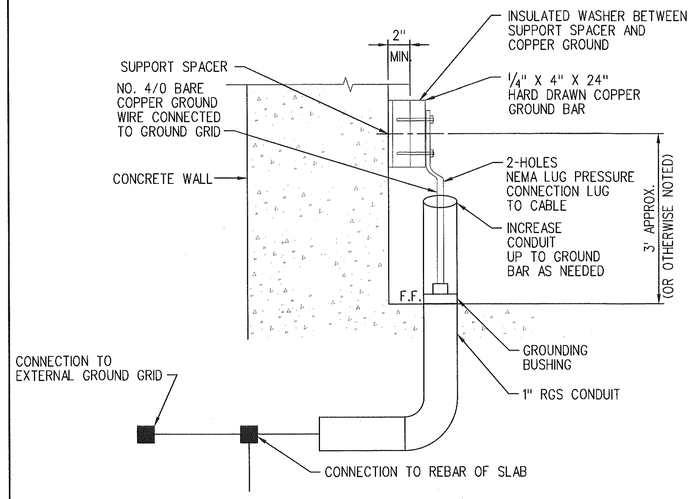

POWER GROUND BUS

B
E-C-007

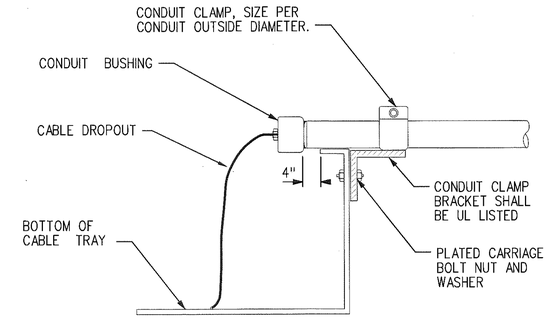

NOTE:

1. IN ALL AREAS OUTSIDE ELECTRICAL ROOMS CABLE TRAY SHALL BE SOLID BOTTOM WITH COVERS.

CONDUIT ATTACHMENT TO CABLE TRAY

C
E-C-007

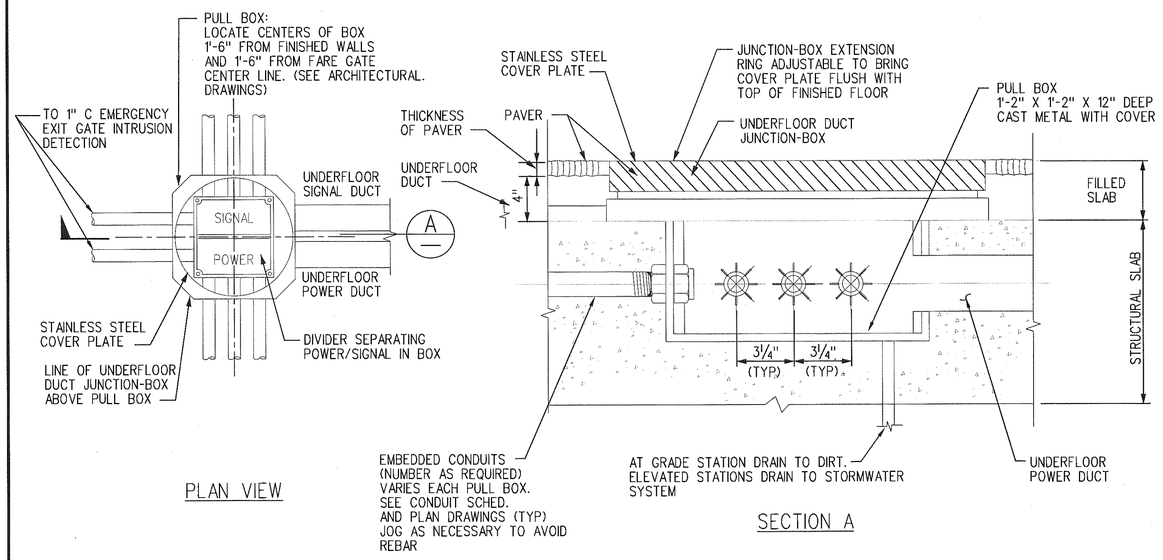

NOTE:

FOR PRECISE SIZE OF UNDERFLOOR DUCT SYSTEM ELEMENTS, THE CONTRACTOR IS TO COORDINATE DIRECTLY WITH THE UFS CONTRACTOR.

FARE COLLECTION JUNCTION AND PULL BOX

D
E-C-007

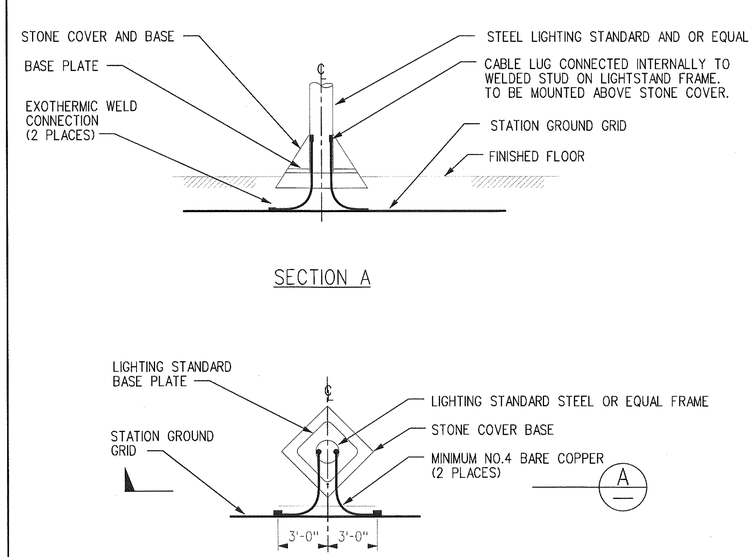

GROUNDING OF LIGHT STANDARD MAST

E
E-C-007

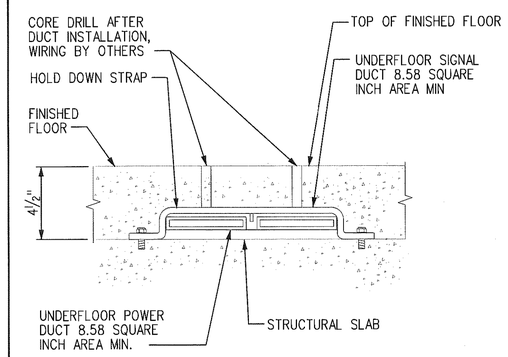

SRJV
FEB 01 2013
ISSUED FOR CONSTRUCTION

UNDERFLOOR DUCT FOR FARE COLLECTION

F
E-C-007

THE PREPARATION OF THIS DRAWING HAS BEEN FINANCED BY THE TAXES OF THE CITIZENS OF LOS ANGELES COUNTY AND OF THE STATE OF CALIFORNIA.

REV	DATE	BY	APP	REG NO	EXPIRES	SEAL HOLDER	DESCRIPTION
0	1/24/13	DH	IRV	E12619	9/30/13	IAN R. VARLEY	APPROVED FOR CONSTRUCTION

DESIGNED BY I. VARLEY
DRAWN BY E. CANTILLER
CHECKED BY D. HAMILTON
IN CHARGE I. VARLEY
DATE 1/24/13

REGISTERED PROFESSIONAL ENGINEER IAN R. VARLEY No. E12619 Exp. 09-30-13 ELECTRICAL STATE OF CALIFORNIA

Exposition Metro Line Construction Authority
Expo
Exposition Construction Authority Approved for Construction Drawings - AFC
JAN 31 2013
EXPO SKANSKA RADOS
444 South Flower Street
Suite 2200
Los Angeles, CA 90071
TEL (213) 443-7463
FAX (213) 362-9481
PARSONS BRINCKERHOFF
CURRENT STATUS

EXPOSITION LRT PROJECT- PHASE 2
COMMON ELECTRICAL
ELECTRICAL DETAILS

CONTRACT NO XP8902-002
DRAWING NO E-C-007
REV 0
SCALE NONE
SHEET NO

C:\projectwise\pb\projectwise\emt\rodriguezd\dms90020\expo2-E-C-007.dwg
31-Jan-13 1:54 PM Rodriguez, Dennis

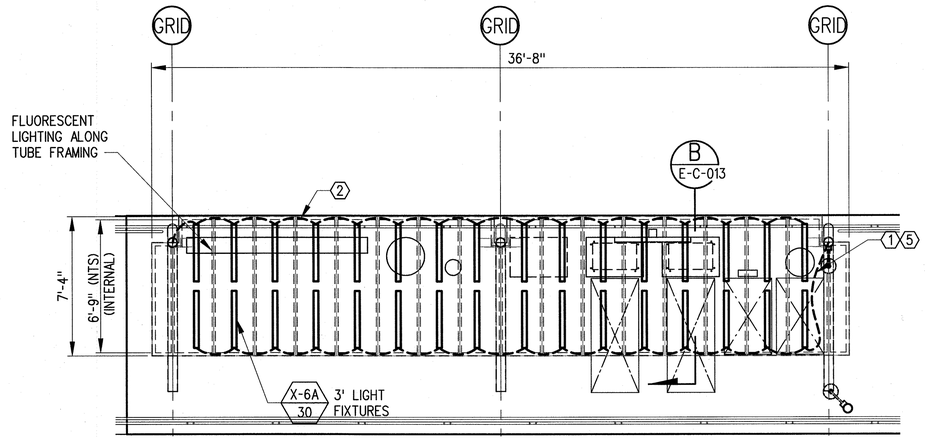

TICKETING AREA RAIN CANOPY ELECTRICAL PLAN

1 / E-C-013

1/4"=1'-0"

(WESTWOOD, 26TH, 17TH, & 4TH TICKETING AREA * 2 ST STATIONS)

(TOTAL LOAD = 2 X 16 X 30 = 960W)

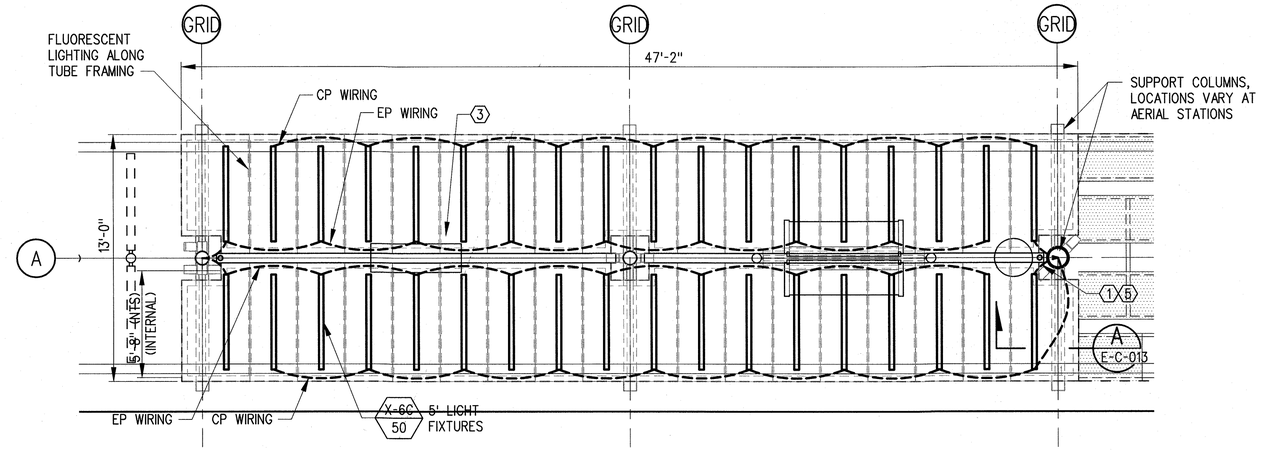

PLATFORM RAIN CANOPY (DOUBLEWIDE) ELECTRICAL PLAN

2 / E-C-013

1/4"=1'-0"

(NATIONAL PALMS, SEPULVEDA, BUNDY, WESTWOOD, 17TH, & 4TH ST STATIONS)

(TOTAL LOAD = 2 X 18 X 50 = 1,800W)

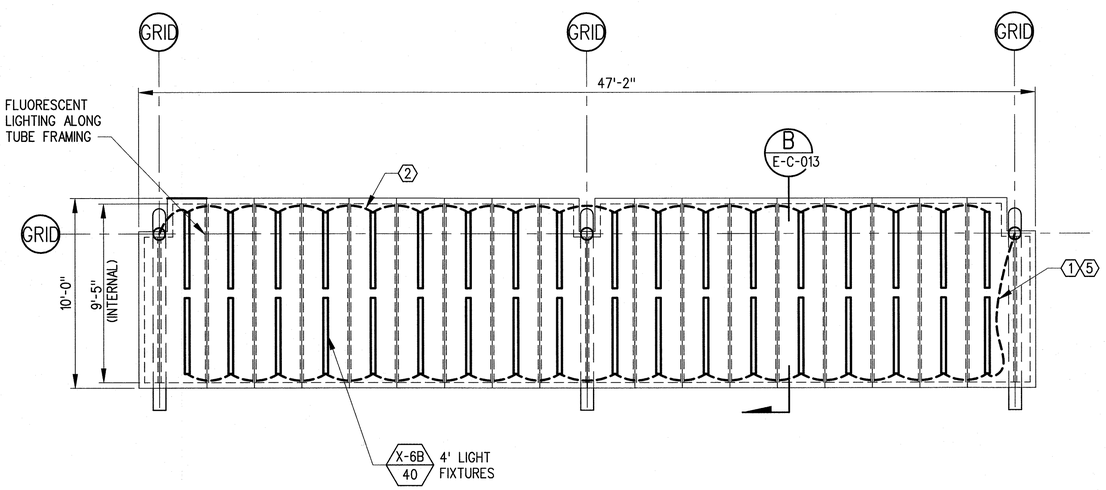

PLATFORM RAIN CANOPY (SINGLE WIDE) ELECTRICAL PLAN

3 / E-C-013

1/4"=1'-0"

(26TH ST STATIONS)

(TOTAL LOAD = 2 X 18 X 40 = 1,440W)

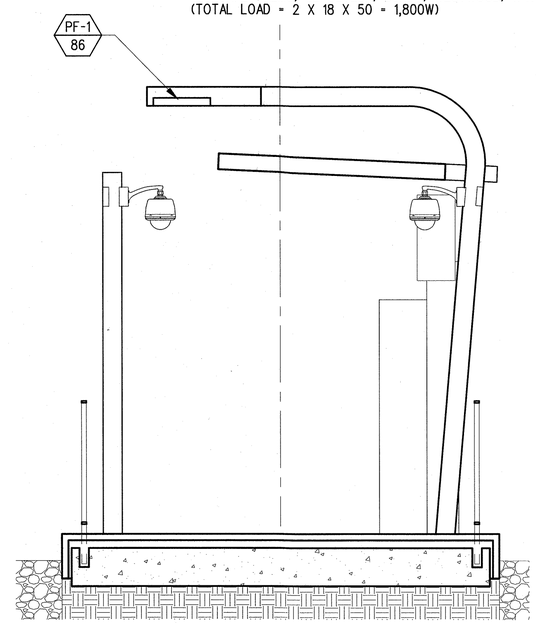

SECTION

B / E-C-013

NO SCALE

(DRFI 11068)

ADD TO NOTES:

2. USE 3/8" LFNC FOR WIRING FOR THE RAIN CANOPY LIGHTING.
3. WIRING WITHIN THE CANOPY MAY BE REDUCED FROM #10 AWG TO #12 AWG AS THE CIRCUIT BREAKERS SHOULD BE RATED AT 20 AMPERES.

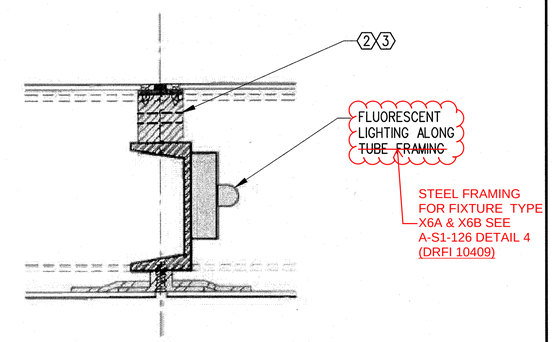

SECTION

A / E-C-013

NO SCALE

SRJV
FEB 07 2014
ISSUED FOR CONSTRUCTION

NOTE:

1. FOR COMMUNICATIONS COORDINATION REFERENCE NOTE 33 OF GENERAL NOTES ON DRAWING E-C-001.

KEYNOTES:

1. MAINTAIN SEPARATION OF CP & EP POWER PER NEC IN CANOPY AND SUPPORT POLES PER NEC.
2. PROVIDE 1" DIA HOLES IN U-CHANNEL AS NEEDED FOR PASSAGE OF FLEX CONDUIT. REFERENCE STRUCTURAL DRAWINGS FOR OPENINGS.
3. PROVIDE 2x1" HOLES IN U-CHANNEL AS NEEDED FOR PASSAGE OF FLEXIBLE CONDUIT.
4. REFER TO ARCHITECTURAL DRAWINGS FOR DETAILS ON RAIN CANOPIES.
5. ~~#10~~ #12 WIRE, 90°C TEMPERATURE RATING, FLAME RETARDANT, MOISTURE, AND HEAT RESISTANT. IN FLEX CONDUIT RACEWAY. ROUTE WIRES AT RACEWAY CANOPY NOT TO BE USED SOLELY AS THE RACEWAY. (DRFI 11068)

THE PREPARATION OF THIS DRAWING HAS BEEN FINANCED BY THE TAXES OF THE CITIZENS OF LOS ANGELES COUNTY AND OF THE STATE OF CALIFORNIA.

REV	DATE	BY	APP	REG NO	EXPIRES	SEAL HOLDER	DESCRIPTION
1	1/14/14	AN	FSW	E11465	12/31/15	F. WALIEDDINE	ECI 79
0	1/24/13	DH	IRV	E12619	9/30/13	IAN R. VARLEY	APPROVED FOR CONSTRUCTION

DESIGNED BY A. NALBANDIAN
DRAWN BY H. HERNANDEZ
CHECKED BY F. WALIEDDINE
IN CHARGE F. WALIEDDINE
DATE 1/24/13

REGISTERED PROFESSIONAL ENGINEER — FADI S. WALIEDDINE — No. E11465 — Exp. 12-31-15 — ELECTRICAL — STATE OF CALIFORNIA

Exposition Metro Line Construction Authority
Expo

EXPO SKANSKA RADOS

444 South Flower Street
Suite 2200
Los Angeles, CA 90071
TEL (213) 443-7463
FAX (213) 362-9481

PARSONS BRINCKERHOFF

CURRENT STATUS

EXPOSITION LRT PROJECT- PHASE 2
COMMON ELECTRICAL
LIGHTING DETAILS
RAIN SHIELDS

Exposition Construction Authority Approved for Construction Drawings - AFC
FEB 06 2014

CONTRACT NO XP8902-002
DRAWING NO E-C-013
REV 1
SCALE AS NOTED
SHEET NO

C:\projectwise\pb\projectwise\thermantdezh\dms09028\expo2-E-C-013.dwg
14-Jan-14 4:39 PM Hernandez, Hector L.

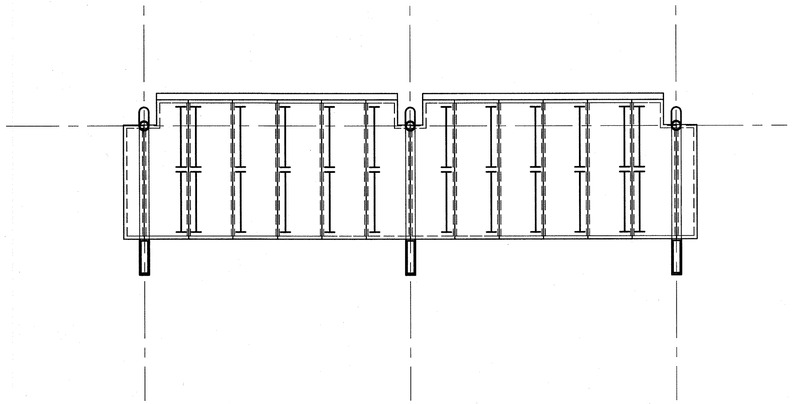

FARE BARRIER RAIN
CANOPY REFLECTED CEILING PLAN (1) E-C-014
1/4"=1'-0"
(4 TH ST STATION)
(TOTAL LOAD = 2 X 10 X 40 = 800 W)

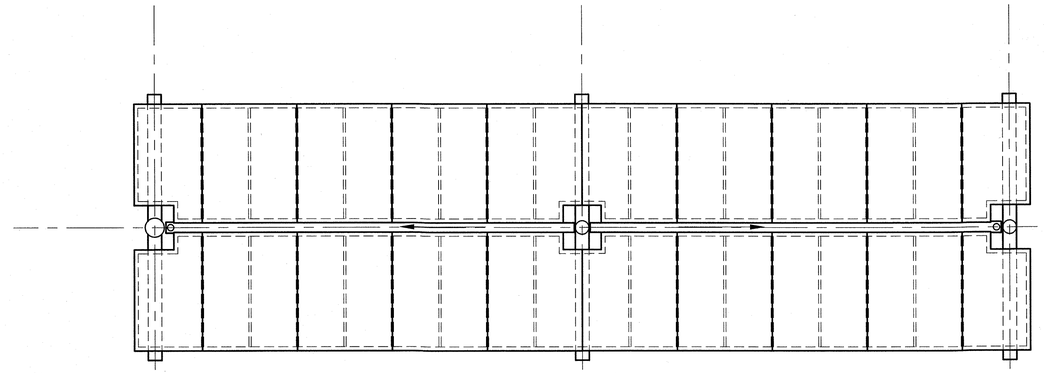

TICKETING AREA #1 RAIN
CANOPY REFLECTED CEILING PLAN (3) E-C-014
1/4"=1'-0"
4 TH ST STATION
(TOTAL LOAD = 3 X 14 X 40 = 1,680 W)

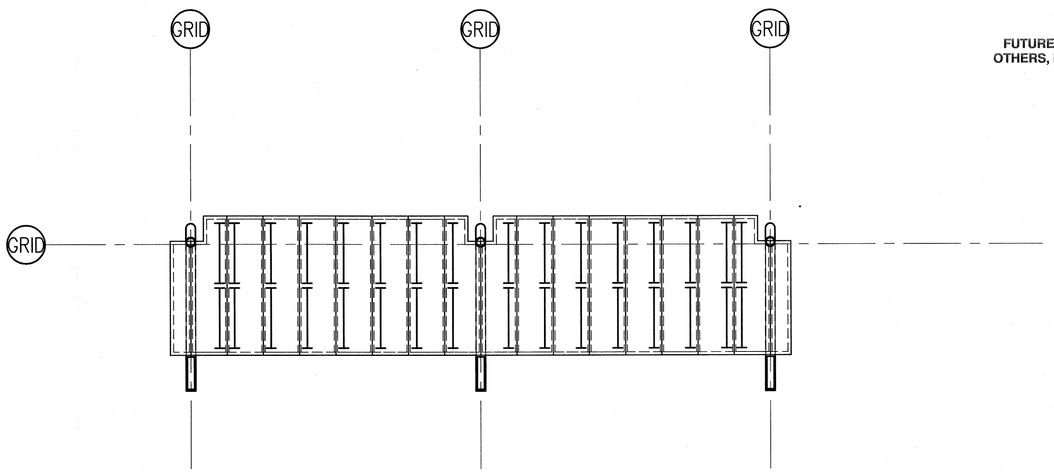

FUTURE BY
OTHERS, N.I.C.

MAP CASE RAIN CANOPY
REFLECTED CEILING PLAN (2) E-C-014
1/4"=1'-0"
(4 TH ST STATION)
(TOTAL LOAD = 2 X 14 X 40 = 1,120 W)

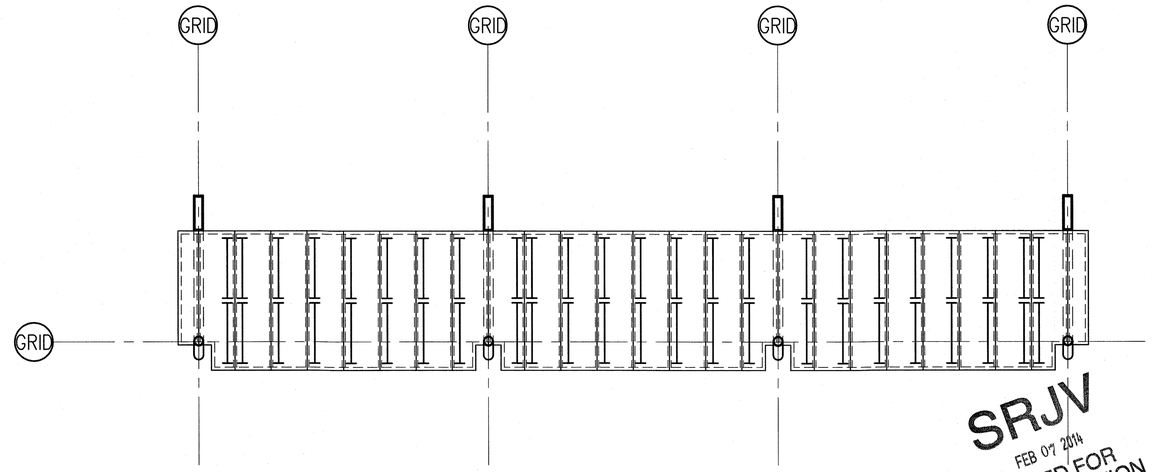

SRJV
FEB 07 2014
ISSUED FOR
CONSTRUCTION

TICKETING AREA #3 RAIN
CANOPY REFLECTED CEILING PLAN (4) E-C-014
1/4"=1'-0"
4 TH ST STATION
(TOTAL LOAD = 3 X 14 X 40 = 1,680 W)

4' 2' 0 4' 8'

THE PREPARATION OF THIS DRAWING HAS BEEN FINANCED BY THE TAXES OF THE CITIZENS OF LOS ANGELES COUNTY AND OF THE STATE OF CALIFORNIA.

REV	DATE	BY	APP	REG NO	EXPIRES	SEAL HOLDER	DESCRIPTION
0	1/14/14	AN	FSW	E11465	12/31/15	F. WALIEDDINE	ECI 79

DESIGNED BY A. NALBANDIAN
DRAWN BY H. HERNANDEZ
CHECKED BY F. WALIEDDINE
IN CHARGE F. WALIEDDINE
DATE 1/14/14

REGISTERED PROFESSIONAL ENGINEER
FADI S. WALIEDDINE
No. E11465
Exp. 12-31-15
ELECTRICAL
STATE OF CALIFORNIA

Exposition Metro Line Construction Authority
Expo

EXPO SKANSKA RADOS

444 South Flower Street
Suite 2200
Los Angeles, CA 90071
TEL (213) 443-7463
FAX (213) 362-9481

PARSONS BRINCKERHOFF

CURRENT STATUS

EXPOSITION LRT PROJECT- PHASE 2
COLORADO/4TH STREET STATION
RAIN CANOPY PLANS

Exposition Construction Authority
Approved for Construction
Drawings - AFC
FEB 06 2014

CONTRACT NO XP8902-002
DRAWING NO E-C-014
REV 0
SCALE 1/4" = 1'-0"
SHEET NO

C:\projectwise\pb\projectwisemt\hernandezh\dms09028\expo2-E-C-014.dwg
14-Jan-14 4:45 PM
Hernandez, Hector L.

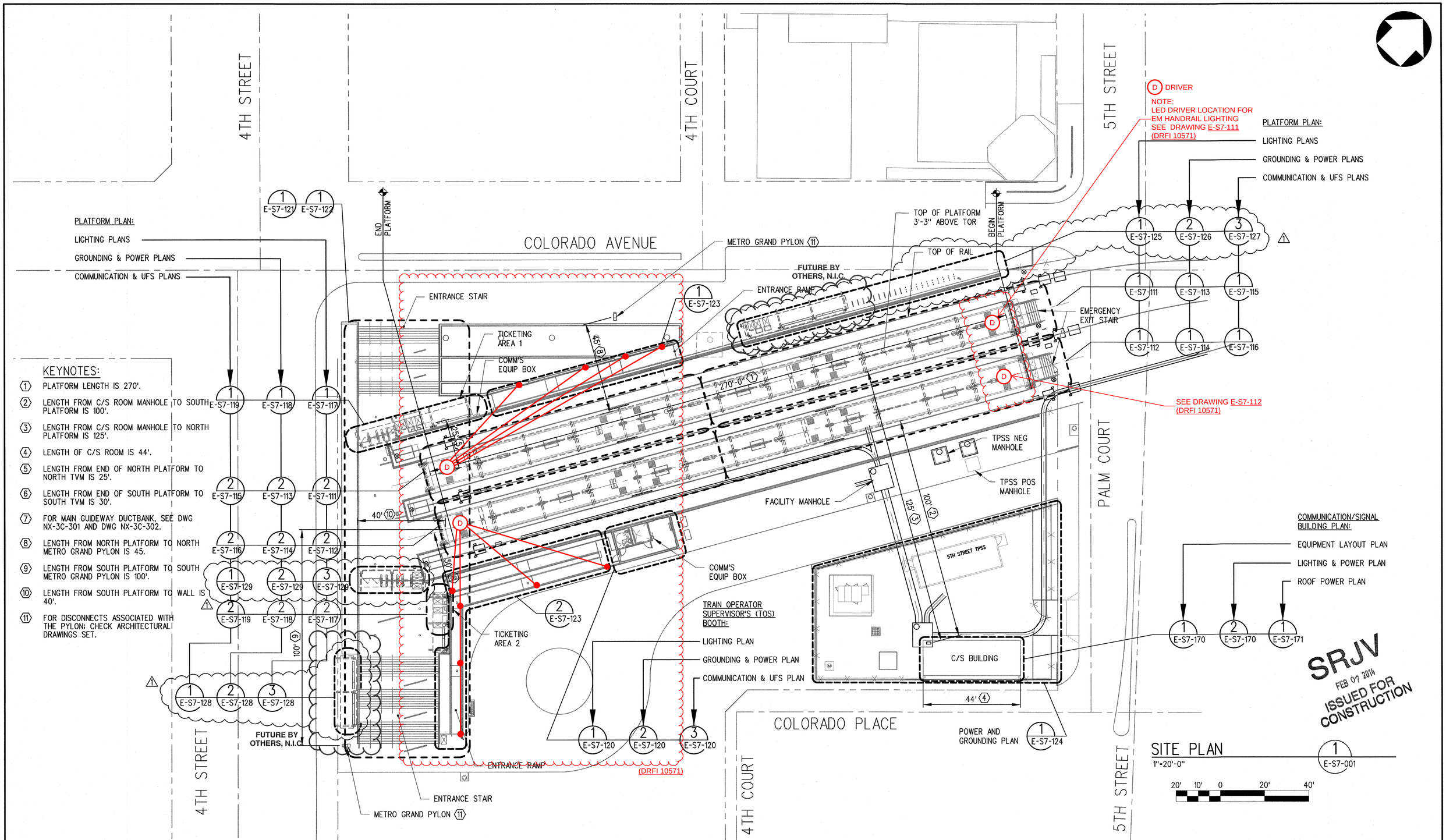

KEYNOTES:

1. PLATFORM LENGTH IS 270'.
2. LENGTH FROM C/S ROOM MANHOLE TO SOUTH PLATFORM IS 100'.
3. LENGTH FROM C/S ROOM MANHOLE TO NORTH PLATFORM IS 125'.
4. LENGTH OF C/S ROOM IS 44'.
5. LENGTH FROM END OF NORTH PLATFORM TO NORTH TVM IS 25'.
6. LENGTH FROM END OF SOUTH PLATFORM TO SOUTH TVM IS 30'.
7. FOR MAIN GUIDEWAY DUCTBANK, SEE DWG NX-3C-301 AND DWG NX-3C-302.
8. LENGTH FROM NORTH PLATFORM TO NORTH METRO GRAND PYLON IS 45.
9. LENGTH FROM SOUTH PLATFORM TO SOUTH METRO GRAND PYLON IS 100'.
10. LENGTH FROM SOUTH PLATFORM TO WALL IS 40'.
11. FOR DISCONNECTS ASSOCIATED WITH THE PYLON: CHECK ARCHITECTURAL DRAWINGS SET.

THE PREPARATION OF THIS DRAWING HAS BEEN FINANCED BY THE TAXES OF THE CITIZENS OF LOS ANGELES COUNTY AND OF THE STATE OF CALIFORNIA.

REV	DATE	BY	APP	REG NO	EXPIRES	SEAL HOLDER	DESCRIPTION
1	1/14/14	AN	FSW	E11465	12/31/15	F. WALIEEDDINE	ECI 79
0	5/30/13	AN	FSW	E11465	12/31/13	F. WALIEDDINE	APPROVED FOR CONSTRUCTION

DESIGNED BY A. NALBANDIAN
DRAWN BY H. HERNANDEZ
CHECKED BY F. WALIEDDINE
IN CHARGE F. WALIEDDINE
DATE 5/30/13

REGISTERED PROFESSIONAL ENGINEER — FADI S. WALIEDDINE — No. E11465 — Exp. 12-31-15 — ELECTRICAL — STATE OF CALIFORNIA

Exposition Metro Line Construction Authority
Expo

EXPO SKANSKA RADOS

444 South Flower Street
Suite 2200
Los Angeles, CA 90071
TEL (213) 443-7463
FAX (213) 362-9481

PARSONS BRINCKERHOFF

CURRENT STATUS

EXPOSITION LRT PROJECT- PHASE 2
COLORADO/4TH STREET STATION
SITE PLAN

Exposition Construction Authority
Approved for Construction
Drawings - AFC
FEB 06 2014

CONTRACT NO XP8902-002
DRAWING NO E-S7-001
REV 1
SCALE 1" = 20'-0"
SHEET NO

C:\projectwise\pb\projectwise\thermantdezhi\dms09028\expo2-E-S7-001.dwg
14-Jan-14
5:18 PM
Hernandez, Hector L.

CERTIFICATE OF COMPLIANCE (Page 1 of 4) LTG-1C

Project Name: Exposition Light Rail Project, Phase 2, 4th St Station, C/S Room
Date: 03/07/12
Project Address: 4 th St and Colorado Blvd, Santa Monica
Climate Zone:
Building CFA : 616 Sq ft
Unconditioned Floor Area : 0

General Information

Building Type: ☒ Nonresidential ☐ High-Rise Residential ☐ Hotel/Motel ☐ Schools ☐ Relocatable Public Schools ☒ Conditioned Spaces ☐ Unconditioned Spaces

Phase of Construction: ☒ New Construction ☐ Addition ☐ Alteration

Method of Compliance: ☒ Complete Building ☐ Area Category ☐ Tailored

Documentation Author's Declaration Statement

- I certify that this Certificate of Compliance documentation is accurate and complete.

Name: Ian Varley Signature: I.Varley
Company: Parsons Brinkerhoff Date: 03/07/12
Address: 444 Flower Street, Suite 800 If applicable: CEA # CA, PE 12619 CEPE #
City/State/Zip: Los Angeles, CA 90071 Phone: 213-362-9470

Principal Lighting Designer's Declaration Statement

- I am eligible under Division 3 of the California Business and Professions Code to accept responsibility for the lighting design.
- This Certificate of Compliance identifies the lighting features and performance specifications required for compliance with Title 24, Pages 1 and 6 of the California Code of Regulations.
- The design features represented on this Certificate of Compliance are consistent with the information provided to document this design on the other applicable compliance forms, worksheets, calculations, plans and specifications submitted to the enforcement agency for approval with this building permit application.

Name: Ian Varley Signature: I.Varley
Company: Parsons Brinkerhoff Phone: 213-362-9470
Address: 444 Flower Street, Suite 800 License # PE License # 12619 Exp 09/30/13
City/State/Zip: Los Angeles, CA 90071 Date: 03/07/12

Lighting Mandatory Measures
Indicate location on building plans of Mandatory Measures Note Block: _____

LIGHTING COMPLIANCE FORMS & WORKSHEETS (check box if worksheet is included)

For detailed instructions on the use of this and all Energy Efficiency Standards compliance forms, please refer to the Nonresidential Manual published by the California Energy Commission.

☒	LTG-1C Pages 1 through 4	Certificate of Compliance. All Pages required on plans for all submittals.
☒	LTG-2C	Lighting Controls Credit Worksheet
☒	LTG-3C	Indoor Lighting Power Allowance
☐	LTG-4C Pages 1 through 4	Tailored Method Worksheet
☐	LTG-5C Pages 1 and 2	Line Voltage Track Lighting Worksheet

CERTIFICATE OF COMPLIANCE (Page 2 of 4) LTG-1C

INDOOR LIGHTING SCHEDULE and FIELD INSPECTION ENERGY CHECKLIST

Project Name: Exposition Light Rail Project, Phase 2, 4th St Station, C/S Room. Date: 03/07/12

Installation Certificate, LTG-1-INST (Retain a copy and verify form is completed and signed.) ☐ **Field Inspector**

Certificates of Acceptance, LTG-2A and LTG-3A (Retain a copy and verify form is completed and signed.) ☐ **Field Inspector**

A separate Lighting Schedule Must Be Filled Out for Conditioned and Unconditioned Spaces Installed Lighting Power listed on this Lighting Schedule is only for: ☒ **CONDITIONED SPACE** ☒ **UNCONDITIONED SPACE**

☒ *The actual indoor lighting power listed below includes all installed permanent and portable lighting systems in accordance with §146(a)*

☐ *Only for offices: Up to the first 0.2 watts per square foot of portable lighting shall not be required to be included in the calculation of actual indoor lighting power density in accordance with the Exception to §146(a). All portable lighting in excess of 0.2 watts per square foot is totaled below.*

	Luminaire Schedule (Type, Lamps, Ballasts)		Installed Watts						
A	B	C	D	E		F	G	H	
Name or Item Tag	Complete Luminaire Description (i.e, 3 lamp fluorescent troffer, F32T8, one dimmable electronic ballast)		Watts per Luminaire [1]	How wattage was determined: CEC Default from NA8	According to §130 (d or e)	Number of Luminaires	Installed Watts (D x F)	Field Inspector [2]: Pass	Fail
S1	1 Lamp 4' Fluor T8 Rapid Start Electronic Ballast		40	☐	☐	12	480	☐	☐
				☐	☐			☐	☐
				☐	☐			☐	☐
				☐	☐			☐	☐
				☐	☐			☐	☐
				☐	☐			☐	☐
				☐	☐			☐	☐
				☐	☐			☐	☐
				☐	☐			☐	☐
				☐	☐			☐	☐
				☐	☐			☐	☐
				☐	☐			☐	☐
				☐	☐			☐	☐
				☐	☐			☐	☐
				☐	☐			☐	☐
				☐	☐			☐	☐
				☐	☐			☐	☐
				☐	☐			☐	☐
			INSTALLED WATTS PAGE TOTAL:						

Building total number of pages: 1
Installed Watts Building Total (Sum of all pages): 320
Enter into LTG-1C Page 4 of 4

1. Wattage shall be determined according to Section 130(d and e). Wattage shall be rating of light fixture, not rating of bulb.
2. If Fail then describe on Page 2 of the Inspection Checklist Form and take appropriate action to correct. Verify building plans if necessary.

CERTIFICATE OF COMPLIANCE (Page 3 of 4) LTG-1C

Project Name: Exposition Light Rail Project, Phase 2, 4 th Street Station, C/S Room
Date: 03/07/12

INDOOR LIGHTING SCHEDULE and FIELD INSPECTION ENERGY CHECKLIST

Fill in controls for all spaces: a) area controls, b) multi-level controls, c) manual daylighting controls for daylit areas > 250 ft², automatic daylighting controls for daylit areas > 2,500 ft², d) shut-off controls, e) display lighting controls, f) tailored lighting controls - general lighting controlled separately from display, ornamental and display case lighting and g) demand responsive automatic controls for retail stores > 50,000 ft², in accordance with Section 131.

MANDATORY LIGHTING CONTROLS - FIELD INSPECTION ENERGY CHECKLIST

Type / Description	Number of Units	Location in Building		Field Inspector: Pass	Fail
Lighting CP & Occupancy Sensor	1	C/S Room		☐	☐
				☐	☐
				☐	☐
				☐	☐
				☐	☐
				☐	☐
				☐	☐
				☐	☐
				☐	☐
				☐	☐
				☐	☐
				☐	☐

Field Inspector's Notes or Discrepancies:

CERTIFICATE OF COMPLIANCE (Page 4 of 4) LTG-1C

Project Name: Exposition Light Rail Project, 4th St Station, C/S Room Date: 03/07/12

Conditioned and Unconditioned space Lighting must not be combined for compliance

Indoor Lighting Power for Conditioned Spaces		Indoor Lighting Power for Unconditioned Spaces	
	Watts		Watts
Installed Lighting (from Conditioned LTG-1C Page 2)	480	**Installed** Lighting (from Unconditioned LTG-1C Page 2)	
Lighting Control Credit Conditioned Spaces (from LTG-2C)	- 72	Lighting Control Credit Unconditioned Spaces (from LTG-2C)	-
Adjusted **Installed** Lighting Power	= 408	Adjusted **Installed** Lighting Power	=
Complies if **Installed** ≤ **Allowed**		Complies if **Installed** ≤ **Allowed**	
Allowed Lighting Power Conditioned Spaces (from LTG-3C)	523	**Allowed** Lighting Power Unconditioned Spaces (from LTG-3C)	

Required Acceptance Tests

Designer:
This form is to be used by the designer and attached to the plans. Listed below is the acceptance test for the Lighting system.
LTG-2A and LTG-3A**. The designer is required to check the acceptance tests and list all control devices serving the building or space shall be certified as meeting the Acceptance Requirements for Code Compliance. If all the lighting system or control of a certain type requires a test, list the different lighting and the number of systems. The NA7 Section in the Appendix of the Nonresidential Reference Appendices Manual describes the test. Since this form will be part of the plans, completion of this section will allow the responsible party to budget for the scope of work appropriately.* ***Forms can be grouped by type of Luminaire controlled.

Enforcement Agency:
***Systems Acceptance**. Before Occupancy Permit is granted for a newly constructed building or space or when ever new lighting system with controls is installed in the building or space shall be certified as meeting the Acceptance Requirements.*
*The **LTG-2A and LTG-3A** forms are not considered a complete form and are not to be accepted by the enforcement agency unless the boxes are checked and/or filled and signed. In addition, a Certificate of Acceptance forms shall be submitted to the enforcement agency that certifies plans, specifications, installation certificates, and operating and maintenance information meet the requirements of §10-103(b) of Title 24 Part 6. The field inspector must receive the properly filled out and signed forms before the building can receive final occupancy. A copy of the **LTG-2A and LTG-3A for** each different lighting luminaire control(s) must be provided to the owner of the building for their records.*

Luminaires Controlled				LTG-2A and 3A
Equipment Requiring Testing	Description	Number of like Controls	Location	Controls and Sensors and Automatic Daylighting Controls Acceptance
Lighting CP & OccupncySensor	C/S Room Lighting	1	C/S Room	☒
				☐
				☐
				☐
				☐
				☐
				☐
				☐
				☐
				☐
				☐
				☐
				☐
				☐
				☐

SRJV
JUN 24 2013
ISSUED FOR CONSTRUCTION

THE PREPARATION OF THIS DRAWING HAS BEEN FINANCED BY THE TAXES OF THE CITIZENS OF LOS ANGELES COUNTY AND OF THE STATE OF CALIFORNIA.

REV	DATE	BY	APP	REG NO	EXPIRES	SEAL HOLDER	DESCRIPTION
0	5/30/13	AN	FSW	E11465	12/31/13	F. WALIEDDINE	APPROVED FOR CONSTRUCTION

DESIGNED BY A .NALBANDIAN
DRAWN BY H. HERNANDEZ
CHECKED BY F. WALIEDDINE
IN CHARGE F. WALIEDDINE
DATE 5/30/13

REGISTERED PROFESSIONAL ENGINEER — FADI S. WALIEDDINE No. E11465 Exp. 12-31-13 ELECTRICAL — STATE OF CALIFORNIA

Exposition Metro Line Construction Authority
Expo
Exposition Construction Authority Approved for Construction Drawings - AFC
JUN 21 2013
EXPO SKANSKA RADOS
444 South Flower Street
Suite 2200
Los Angeles, CA 90071
TEL (213) 443-7463
FAX (213) 362-9481
PARSONS BRINCKERHOFF
CURRENT STATUS

EXPOSITION LRT PROJECT- PHASE 2
COLORADO/4TH STREET STATION
TITLE 24 INDOOR LIGHTING
SHEET 1 OF 5

CONTRACT NO XP8902-002
DRAWING NO E-S7-002 REV 0
SCALE NONE
SHEET NO

C:\Expo2\electexpo2-E-S7-002.dwg
Rodriguez, Dennis 10:27 AM 31-May-13

LIGHTING CONTROLS CREDIT WORKSHEET (Page 1 of 2) LTG-2C

Project Name: Exposition Light Rail Project, 4th St Station
Date: 6/30/12

POWER ADJUSTMENT FACTORS (PAF) FOR NON-DAYLIGHT CONTROLS

A Separate PAF Worksheet Must Be Filled Out for Conditioned and Unconditioned Spaces. Control Credits listed on this schedule are only for:

☒ CONDITIONED SPACES ☐ UNCONDITIONED SPACES

A	B	C	D	E	F	G
Room # Zone ID Areas	Lighting Control Description[1]	Plan Reference	Room Area (ft^2)	Watts of Control Lighting	Power Adjustments Factor[2]	Control Credit Watts (E x F)
C/S Room	Occupancy Sensor	E-S7-170	616	480	0.15	72
					PAGE TOTAL	48

Note: Conditioned and Unconditioned Spaces Shall Be Separately Totaled	Number of Pages of LTG-2C Page 1 of 2	1
	Building total of non-daylight control credit watts for all pages of LTG-2C Page 1 of 2	48
	Enter building total of all daylight controls credit watts from LTG-2C Page 2 of 2	
	BUILDING TOTAL OF ALL CONTROL CREDIT WATTS (FOR BOTH NON-DAYLIGHT AND DAYLIGHT CONTROL CREDITS) Enter in LTG-1C Page 4: Lighting Control Credit as appropriate for CONDITIONED or UNCONDITIONED Spaces	48

1. Description shall be consistent with Type of Control defined in Table 146-C
2. Power Adjustment Factor taken from Table 146-C

LIGHTING CONTROLS CREDIT WORKSHEET (Page 2 of 2) LTG-2C

Project Name: Exposition Light Rail Project 4th St Station
Date: 6/30/12

POWER ADJUSTMENT FACTORS (PAF) FOR DAYLIGHT CONTROLS

A Separate PAF Worksheet Must Be Filled Out for Conditioned and Unconditioned Spaces. Daylight Control Credits listed on this schedule are only for:

☐ CONDITIONED SPACES ☐ UNCONDITIONED SPACES

A	B			C	D	E	F			G	H	I	J	K
	Type Daylight Controlled[1] ☒ only one						For Skylights[4]							
Room # Zone ID Areas	Skylit	Primary Sidelit	Secondary Sidelit	Plan Reference	Daylight Area[2]	VT[3]	Well Efficiency	Well Cavity Ratio	Skylit Area	Effective Aperture[5]	General Lighting Power Density (w/ft2)	Watts of controlled lighting	Power Adjustments Factor[6]	Control Credit Watts (I x J)
n/a	☐	☐	☐											
	☐	☐	☐											
	☐	☐	☐											
	☐	☐	☐											
	☐	☐	☐											
	☐	☐	☐											
	☐	☐	☐											
	☐	☐	☐											
	☐	☐	☐											
													PAGE TOTAL	

CONDITIONED AND UNCONDITIONED SPACES SHALL BE SEPARATELY TOTALED	Number of Pages of LTG-2C Page 2 of 2	
	Building total for daylight control credit watts for all pages of LTG-2C Page 2 of 2	
	Enter in bottom of LTG-2C Page 1 of 2 for building total of all daylight controls credit from LTG-2C Page 2 of 2	

1. If Primary sidelit and secondary sidelit daylight areas are controlled together, the PAF is determined based on the secondary sidelit effective aperture for both the primary and secondary sidelit daylight areas.
2. Daylight Areas determined in accordance to Section 131(c)
3. VT = Visible lighting transmittance of windows or skylights determined in accordance with Section 146(a)2E
4. Well Efficiency, Well Cavity Ratio, and Skylit Area determined in accordance with Section 146(a)2E(iii)
5. Effective Aperture determined in accordance with Section 146(a)2E
6. Power Adjustment Factor determined in accordance with Table 146-C

INDOOR LIGHTING POWER ALLOWANCE LTG-3C

Project Name: Exposition Light Rail Project, 4th Street Station, C/S Room
Date: 06/30/12

ALLOWED LIGHTING POWER (Chose One Method)

A Separate LTG-3C must be filled out for Conditioned and Unconditioned Spaces. Indoor Lighting Power Allowances listed on this page are only for: ☒ CONDITIONED spaces ☐ UNCONDITIONED spaces

COMPLETE BUILDING METHOD

BUILDING CATEGORY (From §146 Table 146-E)	WATTS PER (ft^2)	X	COMPLETE BLDG. AREA	=	ALLOWED WATTS
Office Buildings	0.85		616		525
	TOTALS		616		525
			AREA		WATTS

AREA CATEGORY METHOD – Part A

A	B		C		D
AREA CATEGORY (From §146 Table 146-F)	WATTS PER (ft^2)	X	AREA (ft^2)	=	ALLOWED WATTS
Sum of Additional Allowed Watts from Area Category Method – Part B (from table below)					
	TOTALS				
			AREA		WATTS

AREA CATEGORY METHOD – Part B Additional Wattage Allowance (from Table 146-F Footnotes)

A	B	C[1]	D	E	F	G
Primary Function	Sq Ft	Additional Watts Per ft^2 Allowed	Wattage Allowance (B x C)	Description(s) and Quantity of Special Luminaire[2] Types in each Primary Function Area	Total Design Watts	ALLOWED WATTS Smaller of D or F
				TOTALS – Enter into Area Category Method – Part A (table above)		

1. Additional watts available only when allowed according to the footnotes on bottom of Table 146-F for chandelier or sconce; art, craft, assembly or manufacturing specialized task work; precision commercial/ industrial work; or lab specialized task work.
2. Special luminaires are light fixtures described in the Table 146-F Footnotes that are subject to an additional wattage allowance.

TAILORED METHOD

Total Allowed Watts using the Tailored Method taken from LTG-4C (Page 1 of 4) Row 3

The indoor lighting power allowance using the Tailored Method of compliance shall be determined using the LTG-4C set of forms. A separate set of LTG-4C forms shall be filled out for CONDITIONED and UNCONDITIONED spaces

SRJV
JUN 24 2013
ISSUED FOR CONSTRUCTION

THE PREPARATION OF THIS DRAWING HAS BEEN FINANCED BY THE TAXES OF THE CITIZENS OF LOS ANGELES COUNTY AND OF THE STATE OF CALIFORNIA.

REV	DATE	BY	APP	REG NO	EXPIRES	SEAL HOLDER	DESCRIPTION
0	5/30/13	AN	FSW	E11465	12/31/13	F. WALIEDDINE	APPROVED FOR CONSTRUCTION

DESIGNED BY A .NALBANDIAN
DRAWN BY H. HERNANDEZ
CHECKED BY F. WALIEDDINE
IN CHARGE F. WALIEDDINE
DATE 5/30/13

REGISTERED PROFESSIONAL ENGINEER
FADI S. WALIEDDINE
No. E11465
Exp. 12-31-13
ELECTRICAL
STATE OF CALIFORNIA

Exposition Metro Line Construction Authority
Expo
Exposition Construction Authority Approved for Construction Drawings - AFC
JUN 21 2013
EXPO SKANSKA RADOS
444 South Flower Street
Suite 2200
Los Angeles, CA 90071
TEL (213) 443-7463
FAX (213) 362-9481
PARSONS BRINCKERHOFF
CURRENT STATUS

EXPOSITION LRT PROJECT- PHASE 2
COLORADO/4TH STREET STATION
TITLE 24 INDOOR LIGHTING
SHEET 2 OF 5

CONTRACT NO XP8902-002
DRAWING NO E-S7-003
REV 0
SCALE NONE
SHEET NO

C:\Expo2\electtexpo2-E-S7-003.dwg
31-May-13 10:28 AM Rodriguez, Dennis

Certificate of Compliance (Page 1 of 4) OLTG-1C

Project Name: Exposition Light Rail Project, Phase 2, 4th St, Platform & Plaza | Date: 03/07/12

Project Address: 4th St and Colorado Blvd, Santa Monica | Total Hardscape Illuminated Area: 14,753 sq ft

General Information

Phase of Construction: ☒ New Construction ☐ Addition ☐ Alteration

Documentation Author's Declaration Statement

- I certify that this Certificate of Compliance documentation is accurate and complete.

Name: Ian Varley	Signature: I.Varley
Company: Parsons Brinkerhoff	Date: 03/07/12
Address: 444 Flower St, Suite 800	IF Applicable CEA # CEPE #: CA, PE 12619
City/State/Zip: Los Angeles, CA 90071	Phone: 213-362-9470

Principal Lighting Designer's Declaration Statement

- I am eligible under Division 3 of the California Business and Professions Code to accept responsibility for the lighting design.
- This Certificate of Compliance identifies the lighting features and performance specifications required for compliance with Title 24, Pages 1 and 6 of the California Code of Regulations.
- The design features represented on this Certificate of Compliance are consistent with the information provided to document this design on the other applicable compliance forms, worksheets, calculations, plans and specifications submitted to the enforcement agency for approval with this building permit application.

Name: Ian Varley	Signature: I.Varley
Company: Parsons Brinkerhoff	Phone: 213 896 5641
Address: 444 Flower St, Suite 800	License #: PE License # 12619 Exp 09/30/13
City/State/Zip: Los Angeles, CA 90071	Date: 03/07/12

Principal Lighting Designer's Declaration

☒ I certify that this Certificate of Compliance documentation is accurate and complete, and accounts for all outdoor lighting power, including building mounted, pole mounted, as well as all other outdoor lighting designed for the site, and that Additional Lighting Power Allowances for Specific Applications or Additional Lighting Power Allowances for Ordinance Requirements have not been counted more than one time for the same area, in accordance with Section 147 of the Standards.

Outdoor Lighting Mandatory Measures
Indicate location on building plans of Mandatory Measures Note Block: ______________________

LIGHTING COMPLIANCE FORMS & WORKSHEETS (check box if worksheet is included)

For detailed instructions on the use of this and all Energy Efficiency Standards compliance forms, please refer to the Nonresidential Manual published by the California Energy Commission.

☒	OLTG-1C	Certificate of Compliance. All 4 pages required on plans for all submittals.
☒	OLTG-2C	(Page 1 of 3) Lighting Wattage Allowances for General Hardscape, Sales Frontage, or Ornamental Lighting. Optional on plans.
☐	OLTG-2C	(Page 2 of 3) Lighting Wattage Allowances for Per Application or Per Area. Optional on plans.
☐	OLTG-2C	(Page 3 of 3) Additional Lighting Power Allowance for Ordinance Requirements. Optional on plans.

Certificate of Compliance (Page 2 of 4) OLTG-1C

COMPLIANCE FIXTURE / LIGHTING CONTROL SCHEDULE and FIELD INSPECTION CHECKLIST

Project Name: Exposition Light Rail Project, Phase 2, 4th St, Platform & Plaza | Date: 03/07/12

INSTALLATION CERTIFICATE, OLTG-1-INST (Retain a copy and verify form is completed and signed.) **Field Inspection** ☐

CERTIFICATE OF ACCEPTANCE, OLTG-2A (Retain a copy and verify form is completed and signed.) **Field Inspection** ☐

Luminaire Schedule			Installed Watts							
A	B	C	D	E	F		G	H	I	
					How wattage was determined				Field Inspector[2]	
Name Or Item Tag	Luminaire Description [1] See footnote below (i.e.: 1 lamp pole-top shoe-box 400 watt metal halide)	Cutoff Designation	Watts per Luminaire	Special Features	Default from NA-8	According to §130 (d or e)	Number of Luminaires	Installed Watts (D x G)	Pass	Fail
CWM-1	1 Lamp Remote Ballast 100w Metal Halide		118	☐	☐	☒	36	4012	☐	☐
O-10	1 Lamp Remote Ballast 70w Metal Halide		86	☐	☐	☒	16	2064	☐	☐
PF-1	1 Lamp Remote Ballast 70w Metal Halide		86	☐	☐	☒	6	516	☐	☐
A-2	2 Lamp 160w LED (1 x 200w driver)		200	☐	☐	☒	3	600	☐	☐
A-3	4 Lamp 160w LED (2 x 200w driver)		400	☐	☐	☒	1	400	☐	☐
Z-4	4 Illuminated handrails (4 x 200w driver)		200	☐	☐	☒	4	800	☐	☐
				☐	☐	☐			☐	☐
	Enter total into OLTG-1C; Page 4 of 4; Row H; Total Installed Watts:							7940		

1. Type of luminaire (i.e.: post top, wall pack, surface, shoe box); for non-incandescent luminaires, indicate nominal lamp wattage and lamp type (i.e.: fluorescent, incandescent, HID); ballast type (i.e.: electronic or magnetic); number of lamps and number of ballasts per luminaire. For incandescent luminaires, the luminaire wattage listed in column D shall be the maximum relamping rated wattage on a permanent factory-installed label on the luminaire, NOT the wattage of the lamp (bulb) used, in accordance with Section 130(d or e).
2. If Fail then describe on Page 2 of the Inspection Checklist Form and take appropriate action to correct. Verify building plans if necessary.

EXEMPT LUMINAIRES **Field Inspection** ☐

Name or Symbol	Description of exempt luminaires in accordance with §147
X-6A & 6B	Sign Lighting (Rain Shields):- 1 Lamp 3' & 4 fluorescent 30w & 40w internal to rain sheild, ref SLTG-1C
Z-1	Entry Ramp and Stairs Lighting:- Illuminated LED handrail lighting 200w
A-3	Entry Ramp and Stairs Lighting:- Illuminated LED Lampost light 400w

MANDATORY CONTROLS **Field Inspection** ☐

#	Description	Location	#	Description	Location

SPECIAL FEATURES INSPECTION CHECKLIST (See Page 2 of 4 of OLTG-1C)

The local enforcement agency should pay special attention to the items specified in this checklist. These items require special written justification and documentation, and special verification. The local enforcement agency determines the adequacy of the justification, and may reject a building or design that otherwise complies based on the adequacy of the special justification and documentation submitted.

Field Inspector Notes or Discrepancies:

Certificate of Compliance (Page 3 of 4) OLTG-1C

Project Name: Exposition Light Rail Project, Phase 2, 4th St, Platform & Plaza | Date: 03/07/12

A. OUTDOOR LIGHTING ZONE

OUTDOOR LIGHTING ZONE: ☐ OLZ 1 ☐ OLZ 2 ☐ OLZ 3 ☒ OLZ 4

Is the Outdoor Lighting Zone: ☐ Default in accordance with §10-114, or ☐ Amended by JHA

Complete the information below if the default Outdoor Lighting Zone has been amended by the local jurisdiction having authority (JHA):

- ☐ The site is a government designated park, recreation area, wildlife preserve, or portion thereof, and has been designated as LZ2 or LZ3, in accordance with Table 10-114-A, because the site is contained within such a zone.
- ☐ The local jurisdiction having authority has officially adopted a change to the State Default Lighting Zone and has notified the Energy Commission by providing the materials required in §10-114(d) to the Executive Director.
- ☐ The adopted change is posted on the Energy Commission website.

B. ADDITIONAL LIGHTING POWER ALLOWANCE FOR ORDINANCE REQUIREMENTS

Are additional lighting power allowances for ordinance in Table 147-C used? ☒ Yes ☐ No

Complete the information below if additional lighting power allowances for ordinance requirements are used:

- ☐ The local jurisdiction having authority has officially adopted specific outdoor light levels, which are expressed as average or minimum footcandle levels, by following a public process that allowed for formal public notification, review, and comment about the proposed change.
- ☐ The local jurisdiction having authority which adopted specific outdoor light levels and has notified the Commission by providing the following materials required §10-114(f) to the Executive Director.

C. ACCEPTANCE FORMS

Required Acceptance Tests

Designer:

*This form is to be used by the designer and attached to the plans. Listed below is the acceptance test for the Lighting system, **OLTG-2A**. The designer is required to check the acceptance tests and list all control devices serving the building or space shall be certified as meeting the Acceptance Requirements for Code Compliance. If all the lighting system or control of a certain type requires a test, list the different lighting and the number of systems. The NA7 Section in the Appendix of the Nonresidential Reference Appendices Manual describes the test. Since this form will be part of the plans, completion of this section will allow the responsible party to budget for the scope of work appropriately. **Forms can be grouped by type of Luminaire controlled.***

Enforcement Agency:

***Systems Acceptance**. Before Occupancy Permit is granted for a newly constructed building or space or when ever new lighting system with controls is installed in the building or space shall be certified as meeting the Acceptance Requirements. The **OLTG-2A** form is not considered a complete form and is not to be accepted by the enforcement agency unless the boxes are checked and/or filled and signed. In addition, a Certificate of Acceptance forms shall be submitted to the enforcement agency that certifies plans, specifications, installation certificates, and operating and maintenance information meet the requirements of §10-103(b) of Title 24 Part 6. The field inspector must receive the properly filled out and signed forms before the building can receive final occupancy. A copy of the **OLTG-2A** for each different lighting luminaire control(s) must be provided to the owner of the building for their records.*

	Luminaires Controlled			Certificate of Acceptance OLTG-2A[1]
Equipment Requiring Testing	Description	Number of Like Controls	Location	Outdoor Lighting Acceptance Tests
Lighting Relay Control Panel	Platform Light Fixtures	1	C/S Room	ATS
with astronomical clock	CWM-1,O-10 &PF-1			
	A-2, A-3 & Z-2 & Z-4			

*1. Insert: **OMS** for Outdoor Motion Sensor; **OLSC** for Outdoor Lighting Shutoff Controls; **OP** for Outdoor Photocontrol; **ATS** for Astronomical Time Switch; and, **STS** for Standard (non-astronomical) Time Switch acceptance.*

CERTIFICATE OF COMPLIANCE (Page 4 of 4) OLTG-1C

Project Name: Exposition Light Rail Project, Phase 2, 4th St, Platform & Plaza | Date: 03/07/12

ALLOWED AND INSTALLED OUTDOOR LIGHTING POWER

		Lighting Wattage Power Allowance
A	Lighting power allowance for general hardscape (from OLTG-2C Page 1 of 3)	4658
B	Specific application lighting wattage allowance per unit length (from OLTG-2C Page 1 of 3)	
C	Specific application wattage allowance for ornamental lighting (from OLTG-2C Page 1 of 3)	
D	Specific application wattage allowance per application (from OLTG-2C Page 2 of 3)	1680
E	Specific application lighting wattage allowance per area (from OLTG-2C Page 2 of 3)	
F	Additional lighting power allowance for ordinance requirements (from OLTG-2C Page 3 of 3)	1254
G	Total Allowed Wattage = Sum of rows A through F:	7592
H	Total Installed Watts (from Luminaire Schedule, (from OLTG-1C (Page 2 of 4)	7940
Provided that the lighting wattage power allowances listed in rows A through F are identical to the lighting wattage power allowances taken from OLTG-2C Pages 1 through 3, complies if Installed Wattage in row H is less than or equal to the Total Installed Wattage in row G		☐ Yes ☒ No

NOTES:

SRJV
JUN 24 2013
ISSUED FOR CONSTRUCTION

THE PREPARATION OF THIS DRAWING HAS BEEN FINANCED BY THE TAXES OF THE CITIZENS OF LOS ANGELES COUNTY AND OF THE STATE OF CALIFORNIA.

REV	DATE	BY	APP	REG NO	EXPIRES	SEAL HOLDER	DESCRIPTION
0	5/30/13	AN	FSW	E11465	12/31/13	F. WALIEDDINE	APPROVED FOR CONSTRUCTION

DESIGNED BY A .NALBANDIAN
DRAWN BY H. HERNANDEZ
CHECKED BY F. WALIEDDINE
IN CHARGE F. WALIEDDINE
DATE 5/30/13

REGISTERED PROFESSIONAL ENGINEER — FADI S. WALIEDDINE — No. E11465 — Exp. 12-31-13 — ELECTRICAL — STATE OF CALIFORNIA

Exposition Metro Line Construction Authority
Expo
Exposition Construction Authority Approved for Construction Drawings - AFC

EXPO SKANSKA RADOS
444 South Flower Street
Suite 2200
Los Angeles, CA 90071
TEL (213) 443-7463
FAX (213) 362-9481

PARSONS BRINCKERHOFF JUN 21 2013
CURRENT STATUS

EXPOSITION LRT PROJECT- PHASE 2
COLORADO/4TH STREET STATION
TITLE 24 OUTDOOR LIGHTING
SHEET 3 OF 5

CONTRACT NO XP8902-002
DRAWING NO E-S7-004 REV 0
SCALE NONE
SHEET NO

C:\Expo2\elec\expo2-E-S7-004.dwg
Rodriguez, Dennis 10:28 AM 31-May-13

OUTDOOR LIGHTING WORKSHEET (Page 1 of 3) OLTG-2C

Project Name: Exposition Light Rail Project, Phase 2, 4th St, Platform — Date: 03/07/12

A. LIGHTING POWER ALLOWANCE FOR GENERAL HARDSCAPE

AREA WATTAGE ALLOWANCE (AWA)			LINEAR WATTAGE ALLOWANCE (LWA)			INITIAL WATTAGE ALLOWANCE	TOTAL GENERAL HARDSCAPE LIGHTING ALLOWANCE
A	B	C	D	E	F	G	H
ILLUMINATED HARDSCAPE AREA	AWA PER SQUARE FOOT	AWA (A X B)	PERIMETER LENGTH OF GENERAL HARDSCAPE	LWA PER LINEAR FOOT	LWA (D X E)	IWA (WATTS)	C + F + G
14,753	0.115	1696	1680	1.15	1932	1030	4658
Enter total into OLTG-1C; Page 4 of 4; Row A; Lighting Power Allowance for General Hardscape:							4658

☐ **Yes**: AWA, LWA, and IWA from Table 147-A was used as appropriate for the Outdoor Lighting Zone

B. SPECIFIC APPLICATION LIGHTING WATTAGE ALLOWANCE PER UNIT LENGTH (Available only for sales frontage)

DETERMINE WATTAGE ALLOWANCE				LUMINAIRE TYPE		DESIGN WATTS			
A	B	C	D	E	F	G	H	I	J
Specific Lighting Application	Linear Feet of Frontage	Sales Frontage allowance for OLZ (watts per lf)	Wattage Allowance (B x C)	Name or Symbol	Luminaire Type	Luminaire Quantity	Watts per Luminaire	Design Watts (G x H)	Allowed Watts Minimum of D or I
Enter total into OLTG-1C; Page 4 of 4; Row B; Specific Application Lighting Wattage Allowance Per Unit Length									

C. SPECIFIC APPLICATION WATTAGE ALLOWANCE FOR ORNAMENTAL LIGHTING

DETERMINE WATTAGE ALLOWANCE				LUMINAIRE TYPE		DESIGN WATTS			
A	B	C	D	E	F	G	H	I	J
Specific Lighting Application	Square feet of Hardscape	Ornamental Lighting Allowance for OLZ (watts per ft^2)	Wattage Allowance (B x C)	Name or Symbol	Luminaire Type	Luminaire Quantity	Watts per Luminaire	Design Watts (G x H)	Allowed Watts Minimum of D or I
Enter total into OLTG-1C; Page 4 of 4; Row C: Specific Application Wattage Allowance for Ornamental Lighting									

2008 Nonresidential Compliance Forms *March 2010*

OUTDOOR LIGHTING WORKSHEET (Page 2 of 3) OLTG-2C

Project Name: Exposition Light Rail Project, Phase 2, 4th St, Platform — Date: 03/07/12

D. SPECIFIC APPLICATION LIGHTING WATTAGE ALLOWANCE PER APPLICATION

DETERMINE WATTAGE ALLOWANCE				DESIGN WATTS					ALLOWANCE
A	B	C	D	E	F	G	H	I	J
Specific Lighting Application	Number of Applications	Specific Application Allowance (watts)	Wattage Allowance (B x C)	Luminaire Symbol	Luminaire Type	Luminaire Quantity	Watts per Luminaire	Design Watts (G x H)	Allowed Watts Minimum of D or I
Special security lighting	14,753sq ft	0.019	280	CWM-1	Metal Halide	36	118	4240	280
				O-10		16	86	1376	280
				PF-1		6	86	516	280
				A-2	LED	3	200	600	280
				A-3	LED	1	400	400	280
				Z-4	LED	4	800	800	280
Enter total into OLTG-1C; Page 4 of 4; Row D; Specific Application Wattage Allowance Per Application									1680

E. SPECIFIC APPLICATION LIGHTING WATTAGE ALLOWANCE PER AREA

DETERMINE WATTAGE ALLOWANCE				LUMINAIRE TYPE		DESIGN WATTS			
A	B	C	D	E	F	G	H	I	J
Specific Lighting Application	Illuminated Area of Application	Specific Application Allowance (watts per ft^2)	Wattage Allowance (B x C)	Code for Luminaire Type	Luminaire Type	Luminaire Quantity	Watts per Luminaire	Design Watts (G x H)	Allowed Watts Minimum of D or I
Enter total into OLTG-1C; Page 4 of 4; Row E; Specific Application Lighting Wattage Allowance Per Area									

2008 Nonresidential Compliance Forms *March 2010*

OUTDOOR LIGHTING WORKSHEET (Page 3 of 3) OLTG-2C

Project Name: Exposition Light Rail Project, Phase 2, 4th St, Platform — Date: 03/07/12

F. ADDITIONAL LIGHTING POWER ALLOWANCE FOR ORDINANCE REQUIREMENTS

Note: The additional lighting power allowance for ordinance requirements may be used only if the jurisdiction having authority has officially adopted specific outdoor light levels, which are expressed as average or minimum footcandle (fc) levels, by following a public process that allowed for formal public notification, review, and comment about the proposed change.

☐ Information in OLTG-1C; Page 3 of 4; Section B has been completed.

A	B	C	D	E	F
Hardscape Application Having Official Lighting Ordinance	Illuminated Hardscape Area (ft^2)	Avg. or Min. Ordinance	Number Horizontal Foot Candle required by Ordinance	Allowance (W/ft^2)	Wattage Allowance (B x E)
Min light levels per Metro Ordinance	7621	15 ft cdl	15 ft cdl	0.085	648

1.	Total additional lighting power allowance for ordinance requirements (sum of column F)	648
2.	Enter actual additional incremental wattage used to meet local ordinance requirements	
3.	Enter smaller of row 1 or row 2	648

Enter wattage from row 3 above into OLTG-1C; Page 4 of 4; Row F; Item: Additional lighting power allowance for ordinance requirements

2008 Nonresidential Compliance Forms *March 2010*

SRJV
JUN 24 2013
ISSUED FOR CONSTRUCTION

THE PREPARATION OF THIS DRAWING HAS BEEN FINANCED BY THE TAXES OF THE CITIZENS OF LOS ANGELES COUNTY AND OF THE STATE OF CALIFORNIA.

REV	DATE	BY	APP	REG NO	EXPIRES	SEAL HOLDER	DESCRIPTION
0	5/30/13	AN	FSW	E11465	12/31/13	F. WALIEDDINE	APPROVED FOR CONSTRUCTION

DESIGNED BY A .NALBANDIAN
DRAWN BY H. HERNANDEZ
CHECKED BY F. WALIEDDINE
IN CHARGE F. WALIEDDINE
DATE 5/30/13

REGISTERED PROFESSIONAL ENGINEER — FADI S. WALIEDDINE — No. E11465 — Exp. 12-31-13 — ELECTRICAL — STATE OF CALIFORNIA

Exposition Metro Line Construction Authority
Expo
Exposition Construction Authority Approved for Construction Drawings - AFC
JUN 21 2013

EXPO SKANSKA RADOS
444 South Flower Street
Suite 2200
Los Angeles, CA 90071
TEL (213) 443-7463
FAX (213) 362-9481

PARSONS BRINCKERHOFF

CURRENT STATUS

EXPOSITION LRT PROJECT- PHASE 2
COLORADO/4TH STREET STATION
TITLE 24 OUTDOOR LIGHTING
SHEET 4 OF 5

CONTRACT NO XP8902-002
DRAWING NO E-S7-005 REV 0
SCALE NONE
SHEET NO

C:\Expo2\elec\expo2-E-S7-005.dwg
31-May-13 10:28 AM Rodriguez, Dennis

Certificate of Compliance (Sign Lighting) (Page 1 of 4) SLTG-1C

Project Name: Exposition Light Rail Project, Phase 2, 4th St Station — Date: 11/01/12

Project Address: 4th Street and Colorado Blvd, Santa Monica

Location of Sign: ☒ Outdoor Signs ☐ Indoor Signs
Phase of Sign Construction: ☒ New Signs ☐ Sign Alterations
Type of Lighting Control: ☒ New Lighting Controls ☐ Replaced Lighting Controls ☐ Not Installing Lighting Controls

This Certificate of Compliance includes the following components (check all that apply)
☒ Mandatory Measures (Lighting Controls) ☐ Maximum Allowed Lighting Power ☒ Specific Lighting Sources

1. Certificate of Compliance Declaration Statement (this may be a C10, C45 or other eligible person)

- ☒ I certify under penalty of perjury, under the laws of the State of California, the information provided on this form is true and correct.
- ☒ I am eligible under Division 3 of the California Business and Professions Code to accept responsibility for the lighting design.
- ☒ This Certificate of Compliance identifies the lighting features and performance specifications required for compliance with Title 24, Parts 1 and 6 of the California Code of Regulations.
- ☒ The design features represented on this Certificate of Compliance are consistent with the information provided to document this design on the other applicable compliance forms, worksheets, calculations, plans and specifications submitted to the enforcement agency for approval with this building permit application.

Name:	Ian Varley	Signature	I. Varley
Company:	Parsons Brinckerhoff	Phone	
Address:	444 Flower St, Suite 800	License number (may be contractor's lic #)	PE License # E12619
City/State/Zip:	Los Angeles, CA 90071	Date	11/01/12

2. Installation Certificate (to be signed by responsible person after installation)

Permit number (Enforcement Agency Use)	Checked by/Date (Enforcement Agency Use)

Installation Declaration statement

I certify under penalty of perjury, under the laws of the State of California, the information provided on this form is true and correct.

I am eligible under Division 3 of the Business and Professions Code to accept responsibility for construction, or an authorized representative of the person responsible for construction.

I certify that the installed features, materials, components, or manufactured devices identified on this certificate conforms to all applicable codes and regulations, and the installation is consistent with the plans and specifications approved by the enforcement agency.

I certify that the requirements detailed on this Certificate of Compliance have been met.

I will ensure that a completed, signed copy of this Installation Certificate shall be posted, or made available with the building permit(s) issued for the building, and made available to the enforcement agency for all applicable inspections. I understand that a signed copy of this Installation Certificate is required to be included with the documentation the builder provides to the building owner at occupancy.

Company Name:

Responsible Person's Name:		Responsible Person's Signature:
License number (may be contractor's lic #)	Date Signed:	Position With Company:

Certificate of Compliance (Sign Lighting) (Page 2 of 4) SLTG-1C

Project Name: Exposition Light Rail Project, Phase 2, 4th St Station — Date: 11/01/12

3. Mandatory Sign Lighting Controls

NOTES:

1. *The same responsible person may install both the sign lighting power and the sign lighting controls, or a different responsible person may install the sign lighting controls than the responsible person installing the sign lighting power.*
2. *The Mandatory Measures (sign lighting controls) are required for compliance with the sign lighting Standards. If the person responsible for installing the sign lighting power is not also responsible for the sign lighting controls, then the owner of the sign, general contractor, or architect shall be responsible to have the sign lighting controls installed.*
3. *If more than one person has responsibility for compliance, each responsible person shall prepare and sign a Certificate of Compliance and an Installation Certificate applicable to the portion of construction for which they are responsible; alternatively, the person with chief responsibility for construction shall prepare and sign the Certificate of Compliance Declaration Statement for the entire construction.*

3a. Statements of Responsibility: Any person signing the Certificate of Compliance Declaration Statement on page 1 of 4 on this SLTG-1C shall complete Part 3a. Check Yes or No for all of the following statements:

1	I have responsibility for installing the sign lighting controls ☐ Yes, complete parts 3a and 3b of this form ☒ No, complete part 3a of this form
2	There are no existing sign lighting controls and I will be installing compliant sign lighting controls ☐ Yes ☐ No
3	There are no existing sign lighting controls and someone else will be responsible to install compliant sign lighting controls ☒ Yes ☐ No
4	There are existing sign lighting controls that do not comply with the applicable provision of §119 and §133 and I will be installing compliant sign lighting controls ☐ Yes ☐ No
5	There are existing sign lighting controls that do not comply with the applicable provision of §119 and §133 and someone else will be responsible to install compliant sign lighting controls ☐ Yes ☐ No

3b. Mandatory Sign Lighting Controls

If the person signing the Certificate of Compliance Declaration Statement on page 1 of 4 of this SLTG-1C is responsible for complying with the sign lighting control requirements, that person shall answer all of the following questions:

If there are construction documents, indicate where on the building plans the mandatory measures (sign lighting control) note block can be located:

		Y	N	NA
1	**§133(a)1.** All **indoor sign** lighting is controlled with an automatic time switch control that complies with the applicable requirements of §119.	☐	☐	☒
2	**§133(a)1 and 2.** All **outdoor sign** lighting is controlled with an automatic time switch control plus a photo control, or an outdoor astronomical time switch, that complyy with the applicable requirements of §119.	☒	☐	☐
	Exception to §133(a)2. Outdoor signs in tunnels or large covered areas that require illumination during daylight hours.	☐		☒
3	**§133(a)3.** All outdoor signs are controlled with a dimmer that provides the ability to automatically reduce sign power by a minimum of 65 percent during nighttime hours.	☒	☐	☐
	Exception 1 to §133(a)3. Signs illuminated for less than one hour per day during daylight hours.	☒		☐
	Exception 2 to §133(a)3. Outdoor signs in tunnels or large covered areas that require illumination during daylight hours.	☐		☒
	Exception 3 to §133(a)3. Only metal halide, high pressure sodium, cold cathode, or neon lamps used for illuminating signs or parts of signs.	☐		☒
4	**§133(a)4.** An Electronic Message Center (EMC) having a new connected lighting power load greater than 15 kW has a control installed capable of reducing the lighting power by a minimum of 30 percent when receiving a demand response signal that is sent out by the local utility.	☐	☐	☒
	Exception to §133(a)4. EMC required by a health or life safety statue, ordinance, or regulation, including but not limited to exit signs and traffic signs.	☐		☒

Field Inspector Notes:

Certificate of Compliance (Sign Lighting) (Page 3 of 4) SLTG-1C

Project Name: Exposition Light Rail Project, Phase 2, 4th St Station — Date: 11/01/12

4. Maximum Allowed Lighting Power Method of Compliance
Certificate of Compliance and Field Inspection Energy Checklist

Complete this part if there are signs using the maximum allowed lighting power method of compliance. (Complete part 5 of this Certificate of Compliance if there are signs using the Specific lighting sources method of compliance)

A	B	C	D	E	F	G	H	I	J
Symbol or Code	Description	OPTIONAL - ENERGY VERIFIED label (see instructions below) ✓	Allowed Watts: Sign Area (ft^2)	Allowed Watts: Internally (I) or Externally (E) Illuminated	Allowed Watts: Allowed LPD (I = 12 W/ft^2) (E = 2.3 W/ft^2)	Allowed Watts: Allowed Watts = D x F	Design Watts: Total Installed watts for sign	Complies? Y / N: Complies if H ≤ G	Field Inspector Check that Sign Complies
		☐							☐
		☐							☐
		☐							☐
		☐							☐
		☐							☐
		☐							☐

A	Symbol or code used on the plans (when plans are required) and other documents.
B	A narrative description of the sign, or location of sign on the building; and the location of sign on construction documents.
C	OPTIONAL - Check this box only if this sign has a permanent, pre-printed, factory-installed, ENERGY VERIFIED label, confirming that the sign complies with the Section 148 of the California 2008 Title 24, Part 6 Standards, using the Maximum Allowed Lighting Power method of compliance. The only labels that will be recognized for this purpose are ENERGY VERIFIED Certification Marks authorized by Underwriters Laboratories (UL) or other Product Certification Body accredited to ISO/IEC Guide 65 by the American National Standards Institute in accordance with ISO/IEC 17011. Surveillance by the Accredited Certification Body shall be an ongoing annual inspection program carried out by a Type A Inspection body in accordance with ISO/IEC 17020. For signs with such an ENERGY VERIFIED label, columns 'D' through 'I' are not required to be filled out. Note: Using an ENERGY VERIFIED label is an optional method to validate compliance. An ENERGY VERIFIED label is not needed for compliance.
D	The sign area in square feet.
E	List "I" if the sign is internally illuminated. List "E" if the sign is externally illuminated.
F	Allowed watts per square foot. Enter 12 if the sign is listed as "I" in column E. Enter 2.3 if sign is listed as "E" in column E.
G	Multiply the square footage in column D times the allowed Lighting Power Density (LPD = watts) in column F.
H	Show the total installed watts in the sign, as determined according to the applicable provisions of §130(d or e).
I	Enter Y if the number in column H is less than or equal to the number in column G. Otherwise, the sign does not comply.
J	This page doubles as a field inspection checklist.

Field Inspector Notes:

Certificate of Compliance (Sign Lighting) (Page 4 of 4) SLTG-1C

Project Name: Exposition Light Rail Project, Phase 2, 4th St Station — Date: 11/01/12

5. Specific Lighting Source Method of Compliance
Certificate of Compliance and Field Inspection Energy Checklist

Complete this part if there are signs using the Specific lighting source method of compliance. (Complete part 4 of this Certificate of Compliance if there are signs using the maximum allowed lighting power method of compliance)

A	B	C	D	E
Symbol or Code	Description	OPTIONAL ENERGY VERIFIED label (see instructions below) ✓	Specific light source used for compliance Shall include only lighting technologies listed below List all that apply	Field Inspector Check that Sign Complies ✓
X-6A	Primus Lighting 3' Fluorescent	☐	3' Fluorescent	☐
X-6B	Primus Lighting 4' Fluorescent	☐	3' Fluorescent	☐
X-6C	Primus Lighting 5' Fluorescent	☐	5' Fluorescent	☐
		☐		☐
		☐		☐

A	Symbol or code used on the plans (when plans are required) and other documents.
B	A narrative description of the sign, or location of sign on the building; and the location of sign on construction documents
C	OPTIONAL - Check this box only if this sign has a permanent, pre-printed, factory-installed ENERGY VERIFIED label, confirming that this sign complies with the Section 148 of the California 2008 Title 24, Part 6 Standards, using the Specific Lighting Source Method of Compliance. The only labels that will be recognized for this purpose are ENERGY VERIFIED Certification Marks authorized by Underwriters Laboratories (UL) or other Product Certification Body accredited to ISO/IEC Guide 65 by the American National Standards Institute in accordance with ISO/IEC 17011. Surveillance by the Accredited Certification Body shall be an ongoing annual inspection program carried out by a Type A Inspection body in accordance with ISO/IEC 17020. For signs with such an ENERGY VERIFIED label, column 'D' is not required to be filled out. Note: Using an ENERGY VERIFIED label is an optional method to validate compliance. An ENERGY VERIFIED label is not needed for compliance.
D	Specific Light Source Compliance Method. The sign(s) identified above use only the following lighting technologies: List all applicable numbers (1 through 10) that apply in column D above for each row.
	1 High pressure sodium lamps
	2 Pulse start or ceramic metal halide lamps served by a ballast with ≥ 88% efficiency
	3 Pulse start metal halide lamps that are ≤ 320 watts, are not 250 watt or 175 watt lamps, and are served by a ballast with ≥ 80% efficiency
	4 Neon or cold cathode lamps with transformer or power supply efficiency ≥ 75% with rated output current < 50 mA
	5 Neon or cold cathode lamps with transformer or power supply efficiency ≥ 68% with rated output current ≥ 50 mA
	6 Fluorescent lamps with a minimum color rendering index (CRI) of 80 (Note: when using electronic ballasts for compliance, lamps with a CRI < 80 may be used)
	7 Light emitting diodes (LEDs) with a power supply with ≥ 80% efficiency
	8 Single voltage LED external power supplies designed to convert 120 volt AC input into lower voltage DC or AC output, having a nameplate output power less than or equal to 250 watts, and certified to the Energy Commission as complying with the applicable requirements of the Appliance Efficiency Regulations (Title 20)
	9 Compact fluorescent lamps that do not contain a medium screw base sockets (E24/E26)
	10 Electronic ballasts with a fundamental output frequency ≥ 20 kHz
E	This page doubles as a field inspection checklist.

Field Inspector Notes:

SRJV
JUN 24 2013
ISSUED FOR CONSTRUCTION

C:\Expo2\elecl\expo2-E-S7-006.dwg 31-May-13 10:28 AM Rodriguez, Dennis

THE PREPARATION OF THIS DRAWING HAS BEEN FINANCED BY THE TAXES OF THE CITIZENS OF LOS ANGELES COUNTY AND OF THE STATE OF CALIFORNIA.

REV	DATE	BY	APP	REG NO	EXPIRES	SEAL HOLDER	DESCRIPTION
0	5/30/13	AN	FSW	E11465	12/31/13	F. WALIEDDINE	APPROVED FOR CONSTRUCTION

DESIGNED BY A .NALBANDIAN
DRAWN BY H. HERNANDEZ
CHECKED BY F. WALIEDDINE
IN CHARGE F. WALIEDDINE
DATE 5/30/13

PROFESSIONAL ENGINEER — FADI S. WALIEDDINE — No. E11465 — Exp. 12-31-13 — ELECTRICAL — STATE OF CALIFORNIA

Exposition Metro Line Construction Authority
Expo
Exposition Construction Authority Approved for Construction Drawings - AFC
JUN 21 2013

EXPO SKANSKA RADOS
444 South Flower Street
Suite 2200
Los Angeles, CA 90071
TEL (213) 443-7463
FAX (213) 362-9481

PARSONS BRINCKERHOFF
CURRENT STATUS

EXPOSITION LRT PROJECT- PHASE 2
COLORADO/4TH STREET STATION
TITLE 24 SIGN LIGHTING
SHEET 5 OF 5

CONTRACT NO XP8902-002
DRAWING NO E-S7-006 REV. 0
SCALE NONE
SHEET NO

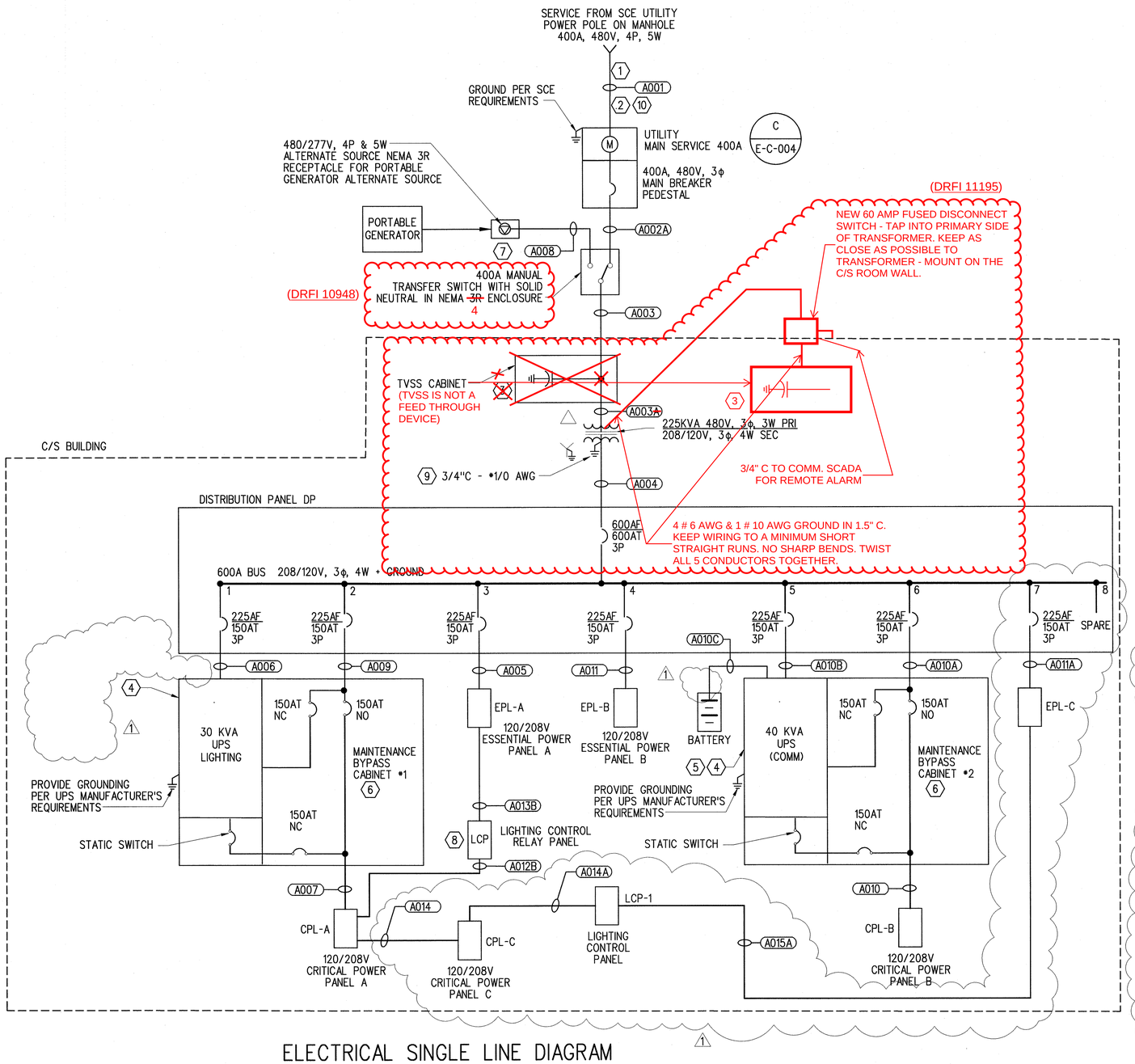

ELECTRICAL SINGLE LINE DIAGRAM

NOTES:

1. WORK FOR UTILITY COMPANY SHALL COMPLY WITH UTILITY COMPANY REQUIREMENTS.
2. FOR COMMUNICATIONS COORDINATION REFERENCE NOTE 33 OF GENERAL NOTES ON DRAWING E-C-001.

KEYNOTES:

1. POWER CONDUCTORS INSTALLED BY UTILITY COMPANY.
2. PROVIDE UNDERGROUND DUCTBANK BETWEEN METER AND UTILITY COMPANY TRANSFORMER, THE METER PAN, AND THE MAIN BREAKER IN ACCORDANCE WITH UTILITY COMPANY REQUIREMENTS.
3. TRANSIENT VOLTAGE SURGE SUPPRESSOR (TVSS) SHALL BE SERVICE ENTRANCE RATED FOR 480 VOLTS, 3Ø, 4W + GROUND SYSTEM. ROUTE DEDICATED #4/0 CABLE TO DEDICATED GROUND ROD. CONNECT TO SCADA FOR TVSS FAIL REMOTE ALARM.
4. BOTH UPS SHALL ACCEPT 120-208 VOLTS, 3Ø, 3 WIRE INPUT TO SERVE 120-208 VOLTS, 3Ø, 4W POWER. ADDITIONALLY THE UPS SHALL HAVE:
   a. SEALED TYPE STORAGE BATTERIES TO PROVIDE POWER FOR THE CONNECTED LOADS DURING LOSS OF NORMAL AC INPUT POWER.
   b. SOLID STATE RECTIFIER, INVERTER, HIGH SPEED SOLID STATE TRANSFER SWITCH AND MANUAL BYPASS SWITCH.
5. UPS PROVIDED BY SYSTEMS CONTRACTOR FOR COMM LIGHTING BY ELECTRICAL CONTRACTOR.
6. MAINTENANCE BYPASS CABINET IS TO PROVIDE MEANS OF BYPASSING THE UPS FOR MAINTENANCE WITHOUT INTERRUPTING POWER TO THE STATION.
7. NEMA PLUG STYLE 200A ~~TWIST LOCK~~, 4 POLE, 5 WIRE. (DRFI 10906)
8. LIGHTING CONTROL RELAY PANEL FITTED WITH 1/4" THICK "GLASTIC" SEPARATOR TO SEPARATE CP & EP LIGHT CIRCUITS.
9. MAIN TRANSFORMER NEUTRAL GROUNDING TO BE PER NEC ARTICLE 250. TRANSFORMER NEUTRAL TO BE BONDED TO BUILDING STEEL, SLAB REBAR AND WATER PIPING.
10. VERIFY AVAILABLE SHORT CIRCUIT VALUE WITH UTILITY COMPANY AT THE POINT OF SERVICE CONNECTION TO SPECIFY ELECTRICAL EQUIPMENT AIC RATING.

Load Calculations

Panel	Voltage	Phase	Wire	Load VA: Continuous Load @ +25 %	Load VA: Connected Load @ 100 %	Load VA: Largest Motor Load@+25%	Load VA: Total Demand Load	Amps
Distribution Panel DP	208/120	3	4	20,180	135,563	2,250	157,993	439
Critical Power CPL-A Lighting	208/120	3	4	4,618	21,208	0	25,826	72
Essential Power EPL-A	208/120	3	4	5,120	37,880	2,250	45,250	126
Critical Power CPL-B Comms	208/120	3	4	1,535	29,240	585	31,360	87
Essential Power EPL-B	208/120	3	4	2,960	25,155	2,250	31,080	86
Essential Power EPL-C	208/120	3	4	0	22,080	0	27,313	61
CRITICAL Power CPL-C	208/120	3	4	685	2,738	0	3,423	10

SRJV
FEB 07 2014
ISSUED FOR CONSTRUCTION

THE PREPARATION OF THIS DRAWING HAS BEEN FINANCED BY THE TAXES OF THE CITIZENS OF LOS ANGELES COUNTY AND OF THE STATE OF CALIFORNIA.

REV	DATE	BY	APP	REG NO	EXPIRES	SEAL HOLDER	DESCRIPTION
1	1/14/14	AN	FSW	E11465	12/31/15	F. WALIEDDINE	ECI 79
0	6/5/13	AN	FSW	E11465	12/31/13	F. WALIEDDINE	APPROVED FOR CONSTRUCTION

DESIGNED BY A. NALBANDIAN
DRAWN BY H. HERNANDEZ
CHECKED BY F. WALIEDDINE
IN CHARGE F. WALIEDDINE
DATE 6/5/13

REGISTERED PROFESSIONAL ENGINEER — FADI S. WALIEDDINE — No. E11465 — Exp. 12-31-15 — ELECTRICAL — STATE OF CALIFORNIA

Exposition Metro Line Construction Authority
Expo
EXPO SKANSKA RADOS
444 South Flower Street
Suite 2200
Los Angeles, CA 90071
TEL (213) 443-7463
FAX (213) 362-9481
PARSONS BRINCKERHOFF
CURRENT STATUS

EXPOSITION LRT PROJECT- PHASE 2
COLORADO/4TH STREET STATION
ELECTRICAL SINGLE LINE DIAGRAM
Exposition Construction Authority
Approved for Construction
Drawings - AFC
FEB 06 2014

CONTRACT NO XP8902-002
DRAWING NO E-S7-010
REV 1
SCALE NONE
SHEET NO

C:\projectwise\pb\projectwise\nthernandezh\dms090228\expo2-E-S7-010.dwg
Hernandez, Hector L. 14-Jan-14 4:52 PM

C:\projectwise\pb\projectwiseint\hernandezh\dms09028\expo2-E-S7-011.dwg

ELECTRICAL RACEWAY AND CABLE SCHEDULE

NUMBER	FROM	TO	CIRCUITS	RACEWAY METHOD	RACEWAY SIZE	RACEWAY TYPE	CONDUCTOR NO & SIZE	CONDUCTOR TYPE	CONDUCTOR GRND	DISTANCE FT	VOLT DROP %	CONDUIT FILL %	REMARKS
A001	UTILITY FEED	MAIN SERVICE PANEL	N/A	UNDERGROUND	-	-	-	-	-	-	-	-	CORDINATE CONDUIT SIZE WITH UTILITY CO.
A002A	MAIN PANEL	TRANSFER SWITCH	N/A	UNDERGROUND	2 x 4"	PVC	4# 500	RHW-2	#2	75	-	33%	SPARE 4" CONDUIT
A003	TRANSFER SWITCH	TVSS PANEL	N/A	UNDERGROUND	2 x 4"	PVC	3# 500	RHW-2	#2	-	-	-	SPARE 4" CONDUIT
A003A	TVSS PANEL	225KVA TRANSFORMER	N/A	SURFACE	4"	GRS	3# 500	XHHW-2	#2	-	-	-	-
A004	225 KVA TRANSFORMER	PANEL DP	N/A	SURFACE	2X4"	GRS	(2)4# 500	XHHW-2	#1	-	-	-	-
A005	PANEL DP	PANEL EPL-A	3	SURFACE	2"	GRS	4# 1/0	XHHW-2	#6	-	-	23%	-
A006	PANEL DP	UPS SYSTEM (LIGHTING)	1	SURFACE	2"	GRS	4# 1/0	XHHW-2	#6	-	-	23%	-
A007	UPS SYSTEM (LIGHTING)	PANEL CPL-A	N/A	SURFACE	2"	GRS	4# 1/0	XHHW-2	#6	-	-	23%	-
A008	EMERGENCY GENERATOR RECEPTACLE	TRANSFER SWITCH	N/A	SURFACE	3"	PVC	4# 4/0	RHW-2	#6	50	-	31%	-
A009	PANEL DP	MAINT BYPASS SWITCH #1	2	SURFACE	2"	GRS	4# 1/0	XHHW-2	#6	-	-	23%	-
A010	UPS SYSTEM (COMM)	PANEL CPL-B	N/A	SURFACE	2"	GRS	4# 1/0	XHHW-2	#6	-	-	20%	-
A010A	PANEL DP	MAINT BYPASS SWITCH #2	6	SURFACE	2"	GRS	4# 1/0	XHHW-2	#6	-	-	23%	-
A010B	PANEL DP	UPS SYSTEM (COMM)	5	SURFACE	2"	GRS	4# 1/0	XHHW-2	#6	-	-	23%	-
A010C	UPS SYSTEM (COMM)	BATTERY	N/A	UNDERGROUND	2"	PVC	4# 1/0	XHHW-2	#6	-	-	-	-
A011	PANEL DP	PANEL EPL-B	4	SURFACE	2"	GRS	4# 1/0	XHHW-2	#6	-	-	23%	-
A011A	PANEL DP	PANEL EPL-C	7	SURFACE	2"	GRS	4# 1/0	XHHW-2	#6			23%	
A012	PANEL CPL-A	MAN HOLE MH-S80		UNDERGROUND	3"	PVC	12c #10 wire+10c # 8wire	XHHW-2	** 2c #10G + 2c #8G	-	-	14%	PLATFORM CP POWER
A012A	PANEL CPL-B	MAN HOLE MH-S80		UNDERGROUND	3"	PVC	12c # 10 wire	XHHW-2	** 2c #10G	-	-	5%	PLATFORM CP POWER
A012B	PANEL CPL-A	PANEL LCP (CPL SECTION)		EXPOSED	3"	GRS	31c # 10wire	XHHW-2	** 3c #10G	-	-	24%	PLATFORM CP LIGHTS
A012C	PANEL LCP (CPL SECTION)	MAN HOLE MH-S80		UNDERGROUND	3"	PVC	31c # 10wire	XHHW-2	** 3c #10G	-	-	13%	PLATFORM CP LIGHTS
A012D	PANEL CPL-B	MAN HOLE MH-S80		UNDERGROUND	4"	PVC	4 x 3# 10 cable	-	-	-	-	-	GUIDEWAYS CAMERAS
A013	PANEL EPL-A	MAN HOLE MH-S80		UNDERGROUND	3"	PVC	6c # 10 wire	XHHW-2	** 1c #10G	-	-	3%	PLATFORM EP POWER
A013A	PANEL EPL-B	MAN HOLE MH-S80		UNDERGROUND	3"	PVC	16c #12 wire + 8c # 10 wire+ 12c #4 wire	XHHW-2	** 2c #12G + 2c #10G + 2c #4G	-	-	27%	PLATFORM EP POWER
A013B	PANEL EPL-A	PANEL LCP (EPL SECTION)		EXPOSED	3"	GRS	18c #10 wire + 18c #8wire	XHHW-2	** 4c #10G + 2c #8G	-	-	19%	PLATFORM EP LIGHTS
A013C	PANEL LCP (EPL SECTION)	MAN HOLE MH-S80		UNDERGROUND	3"	PVC	18c #10 wire + 18c #8wire	XHHW-2	** 4c #10G + 2c #8G	-	-	21%	PLATFORM EP LIGHTS
A013D	PANEL EPL-C	MAN HOLE MH-S80		UNDERGROUND	3"	PVC	10c #10wire + 24c # 4wire	XHHW-2	2C # 10 + 2c #4G				PLATFORM EP POWER
A014	PANEL CPL-A	PANEL CPL-C		SURFACE	2"	GRS	4C #2 wire	XHHW-2	1#8 G				PLATFORM CP LIGHTS
A014A	PANEL CPL-C	PANEL LCP -1 (CPL SECTION)		EXPOSED	2"	GRS	6C #10wire	XHHW-2	2C #10G				PLATFORM CP LIGHTS
A014B	PANEL LCP -1 (CPL SECTION)	MAN HOLE MH-S80		UNDERGROUND	2"	PVC	6C #10wire	XHHW-2	2C #10G				PLATFORM CP LIGHTS
A014C	PANEL CPL-C	MAN HOLE MH-S80		UNDERGROUND	2"	PVC	4C #8wire	XHHW-2	2c #8 G				PLATFORM CP LIGHTS
A015	UNDER PLATFORM CRAWL SPACE	METRO GRAND PYLON A		UNDERGROUND	2"	PVC	2C # 8 wire	XHHW-2	1C #8G	-	-	-	
A015A	PANEL EPL-C	PANEL LCP -1 (EPL SECTION)		EXPOSED	2"	GRS	9C #8wire	XHHW-2	2C #8G				PLATFORM EP LIGHTS
A015B	PANEL LCP -1 (EPL SECTION)	MAN HOLE MH-S80		UNDERGROUND	2"	PVC	9C #8wire	XHHW-2	2C #8G				PLATFORM EP LIGHTS
A016	UNDER PLATFORM CRAWL SPACE	METRO GRAND PYLON B		UNDERGROUND	2"	PVC	2 # 8 wire	XHHW-2	#8	-	-	-	
A016A	PANEL CPL-A	TC-CPL TRANSFORMER		EXPOSED	1"	GRS	3c #6wire	XHHW-2	#10	-	-	-	ISOLATION TRANSFORMER
A017	PANEL EPL-A	RTU-7A		EXPOSED	1"	GRS	3c #8wire	XHHW-2	#8	-	-	-	CIRCUIT FOR AIR CONDITIONING UNIT C/S
A018	PANEL EPL-B	RTU-7B		EXPOSED	1"	GRS	3c #8wire	XHHW-2	#8	-	-	-	CIRCUIT FOR AIR CONDITIONING UNITC/S
A019	PANEL CPL-A	EF-7		EXPOSED	3/4"	GRS	3c #10wire	XHHW-2	#10	-	-	-	CIRCUIT FOR EXHAUST FAN C/S
A025	COMMS TELEPHONE BACKBOARD	MAN HOLE MH-S80		UNDERGROUND	4"	PVC	-	-	-	-	-	-	CABLE BY TELEPHONE UTILITY
A025A	MAN HOLE MH-S80	TELEPHONE UTILITY PULLBOX		UNDERGROUND	4"	PVC	-	-	-	-	-	-	CABLE BY TELEPHONE UTILITY
A026	MAN HOLE MH-S80	IRRIGATION CONTROLLER		UNDERGROUND	2"	PVC	-	-	-	-	-	-	
A031A	MAN HOLE MH-S80	PLATFORM		UNDERGROUND	4"	PVC	23c #10wire + 7c # 8 wire	XHHW-2	** 5c #10G + 2c # 8 G		-	8%	A PLATFORM CP POWER
A031B	MAN HOLE MH-S80	PLATFORM		UNDERGROUND	4"	PVC	38c #10wire + 7c # 8wire	XHHW-2	** 5c #10G + 2c # 8 G		-	11%	B PLATFORM CP POWER
A032A	MAN HOLE MH-S80	PLATFORM		UNDERGROUND	4"	PVC	4c #12wire + 19c #10wire + 12c # 8wire + 18c # 4wire	XHHW-2	** 1c #12G + 3c #10G + 2c # 8G + 2c # 4G		-	14%	A PLATFORM EP POWER
A032B	MAN HOLE MH-S80	PLATFORM		UNDERGROUND	4"	PVC	4c #12wire + 23c #10wire + 15c # 8wire + 18c # 4wire	XHHW-2	** 1c #12G + 5c #10G + 2c # 8G + 2c # 4G		-	15%	B PLATFORM EP POWER
A033A	MAN HOLE MH-S80	PLATFORM A		UNDERGROUND	3"	PVC	-	TBD	-		-	-	A PLATFORM UFS
A033B	MAN HOLE MH-S80	PLATFORM B		UNDERGROUND	3"	PVC	-	TBD	-		-	-	B PLATFORM UFS
A034A	MAN HOLE MH-S80	PLATFORM A		UNDERGROUND	2"	PVC	-	TBD	-		-	-	A PLATFORM REMOTE VSS CEB-3 FIBER OPTIC TICKETING AREA #1
A034B	MAN HOLE MH-S80	PLATFORM A		UNDERGROUND	2"	PVC	-	TBD	-		-	-	A PLATFORM REMOTE VMS CEB-1 FIBER OPTIC TICKETING AREA #1
A035A	MAN HOLE MH-S80	PLATFORM A		UNDERGROUND	3"	PVC	-	TBD	-		-	-	A PLATFORM PA
A035B	MAN HOLE MH-S80	PLATFORM B		UNDERGROUND	3"	PVC	-	TBD	-		-	-	B PLATFORM PA
A036A	MAN HOLE MH-S80	PLATFORM A		UNDERGROUND	2"	PVC	-	TBD	-		-	-	A PLATFORM CCTV 24V POWER
A036B	MAN HOLE MH-S80	PLATFORM B		UNDERGROUND	2"	PVC	-	TBD	-		-	-	B PLATFORM CCTV 24V POWER
A037A	MAN HOLE MH-S80	PLATFORM A/B		UNDERGROUND	2"	PVC	-	TBD	-		-	-	A & B PLATFORM IDS
A037B	MAN HOLE MH-S80	PLATFORM B		UNDERGROUND	2"	PVC	-	TBD	-		-	-	BLS TRIP WIRES
A038A	MAN HOLE MH-S80	PLATFORM A		UNDERGROUND	2"	PVC	-	TBD	-		-	-	A PLATFORM ETEL
A038B	MAN HOLE MH-S80	PLATFORM B		UNDERGROUND	2"	PVC	-	TBD	-		-	-	B PLATFORM ETEL
A039B	TOS BUILDING	PLATFORM B		UNDERGROUND	2"	PVC		TBD					VMS/CCTV DATA CABLE (CES-2 & CEB-4)
A040A	TOS BLDG	PLATFORM A		UNDERGROUND	2"	PVC		TBD					A PLATFORM FIRE ALARM
A040B	TOS BLDG	PLATFORM B		UNDERGROUND	2"	PVC		TBD					B PLATFORM FIRE ALARM
A041	MAN HOLE MH-S80	TOS BUILDING		UNDERGROUND	2"	PVC	-	-	-	-	-	-	TOS BUILDING CP POWER
A042	MAN HOLE MH-S80	TOS BUILDING		UNDERGROUND	2"	PVC	-	-	-	-	-	-	TOS BUILDING EP POWER
A042A	MAN HOLE MH-S80	TOS BUILDING		UNDERGROUND	2"	PVC	-	-	-	-	-	-	TOS BUILDING EP POWER
A043	MAN HOLE MH-S80	TOS BUILDING		UNDERGROUND	2"	PVC	-	-	-	-	-	-	TOS BUILDING PA
A044	MAN HOLE MH-S80	TOS BUILDING		UNDERGROUND	2"	PVC	-	-	-	-	-	-	TOS BUILDING FIRE (VIA PULL BOX)
A045	MAN HOLE MH-S80	TOS BUILDING		UNDERGROUND	2"	PVC	-	-	-	-	-	-	TOS BUILDING DELUGE
A046	MAN HOLE MH-S80	TOS BUILDING		UNDERGROUND	2"	PVC	-	-	-	-	-	-	TOS BUILDING PHONE
A047	MAN HOLE MH-S80	TOS BUILDING		UNDERGROUND	2"	PVC	-	-	-	-	-	-	PLATFORM B VMS CEB FIBER OPTIC
A048	MAN HOLE MH-S80	TOS BUILDING		UNDERGROUND	2"	PVC	-	-	-	-	-	-	PLATFORM B VSS CEB FIBER OPTIC
A049	MAN HOLE MH-S80	PLATFORM B		UNDERGROUND	2"	PVC	-	-	-	-	-	-	BLS- S40 TRACK 3
A050	MAN HOLE MH-S80	PLATFORM B		UNDERGROUND	2"	PVC	-	-	-	-	-	-	BLS - S40 TRACK 3

⟨2⟩ ⟨1⟩ ⟨2⟩ ⟨2⟩

PANEL SCHEDULE

LOCATION: C&S ROOM PANEL: DP VOLTAGE: 208/120 3 Ø
MOUNTING: SURFACE MAIN: 600 AMPS
GROUND BUS: COPPER BUS: 600 AMPS
NUETRAL BUS: 600 AMPS 4-WIRE <2> AIC RATING: 200 KAMPS

DESCRIPTION	TYPE	LOAD (VA) ØA	LOAD (VA) ØB	LOAD (VA) ØC	BREAKER AMPS	BREAKER POLE	BREAKER CKT	PHASE A	PHASE B	PHASE C	BREAKER CKT	BREAKER POLE	BREAKER AMPS	LOAD (VA) ØA	LOAD (VA) ØB	LOAD (VA) ØC	TYPE	DESCRIPTION
CPL-A/C (UPS Lighting)	O	7,494			150	3	1	•			2	3	150	0			-	MAINT BY-PASS SWITCH #1
"	O		6,402			"	"		•		"	"			0		-	"
"	O			7,312		"	"			•	"	"				0	-	"
EPL-A	O	14,376			150	3	3	•			4	3	150	8,930			O	EPL-B
"	O		12,164			"	"		•		"	"			8,560		O	"
"	O			11,340		"	"			•	"	"				7,665	O	"
CPL-B (UPS Comms)	O	13,130			150	3	5	•			6	3	150	0			O	MAINT BY-PASS SWITCH #2
"	O		13,230			"	"		•		"	"			0		O	"
"	O			2,880		"	"			•	"	"				0	O	"
EPL-C	O	7,760			150	3	7	•			8	3		0			O	SPACE
"	O		7,690			"	"		•		"	"			0		O	"
"	O			6,630		"	"			•	"	"				0	O	"
SUB-TOTALS		42,760	39486	28,162										8930	8560	7665		SUB-TOTALS
TOTAL CONNECTED LOAD		51,690	48,046	35,827														

TOTAL PANEL 3ø CONNECTED LOAD: 135,563 VA 376 AMPS
TOTAL PANEL DEMAND LOAD: 157,993 VA 439 AMPS
SHORT CIRCUIT MOTOR CONTRIBUTION: 151,530 AMPS

PANEL DEMAND CALCULATIONS	TYPE	CONN. LOAD	DEMAND FACTOR	DEMAND LOAD
TOTAL LIGHTING & LCL LOAD <1>	L	80,720	125%	100,900
TOTAL MOTOR LOAD	M	25,255	100%	25,255
TOTAL GEN REC LOAD	R	5,400	100%	5,400
TOTAL OTHER LOAD	O	24,188	100%	24,188
25% LARGEST MOTOR LOAD	M	9,000	25%	2,250
TOTAL DEMAND LOAD (VA)		135,563		157,993

NOTES:

<1> LCL:- LONG CONTINOUS LOAD. PER NEC DEFINITIONS AND ARTICLE 230.42 THE FEEDER CONDUCTORS FOR ANY LOAD ENERGISED FOR LONGER THAN 3 HOURS HAS TO BE RATED FOR THAT LOAD PLUS 25%.

<2> PRELIMINARY MIMIMUM AIC RATING TO BE UPDATED UPON RECIEPT OF AVAILABLE SHORT CIRCUIT RECEIVED FROM UTILITY COMPANY

⚠1

KEYNOTE:

⟨1⟩ SEE DWG NX-200 FOR DUCT REFERENCE NUMBER AND SIZE. SEE DWG NX-3C-301 FOR DUCT BANK DETAILS.

⟨2⟩ WIRE TYPE AND DUCT SIZE BY COMMUNICATIONS DESIGNER OR BY OTHERS.

SRJV
FEB 07 2014
ISSUED FOR CONSTRUCTION

THE PREPARATION OF THIS DRAWING HAS BEEN FINANCED BY THE TAXES OF THE CITIZENS OF LOS ANGELES COUNTY AND OF THE STATE OF CALIFORNIA.

REV	DATE	BY	APP	REG NO	EXPIRES	SEAL HOLDER	DESCRIPTION
⚠1	1/14/14	AN	FSW	E11465	12/31/15	F. WALIEDDINE	ECI 79
0	5/30/13	AN	FSW	E11465	12/31/13	F. WALIEDDINE	APPROVED FOR CONSTRUCTION

DESIGNED BY A. NALBANDIAN
DRAWN BY H. HERNANDEZ
CHECKED BY F. WALIEDDINE
IN CHARGE F. WALIEDDINE
DATE 5/30/13

REGISTERED PROFESSIONAL ENGINEER
FADI S. WALIEDDINE
No. E11465
Exp. 12-31-15
ELECTRICAL
STATE OF CALIFORNIA

Exposition Metro Line Construction Authority
Expo

EXPO SKANSKA RADOS
444 South Flower Street
Suite 2200
Los Angeles, CA 90071
TEL (213) 443-7463
FAX (213) 362-9481

PARSONS BRINCKERHOFF

CURRENT STATUS

Exposition Construction Authority
Approved for Construction
Drawings - AFC
FEB 06 2014

EXPOSITION LRT PROJECT- PHASE 2
COLORADO/4TH STREET STATION
FEEDER SCHEDULE
AND PANEL SCHEDULE

CONTRACT NO XP8902-002
DRAWING NO E-S7-011
REV 1
SCALE NONE
SHEET NO

Hernandez, Hector L. 1:42 PM 14-Jan-14

C:\projectwise\pb\projectwise\nthernandezh\dms09028\expo2-E-S7-012.dwg

PANEL: CPL-A

LOCATION: C/S ROOM
MOUNTING: SURFACE
GROUND BUS: COPPER
NUETRAL BUS: 225 AMPS 4-WIRE

VOLTAGE: 208/120 3 Ø
MAIN: 225 AMPS
BUS: 225 AMPS
<2> AIC RATING: 22 KAMPS

DESCRIPTION	%VD	LENGTH	TYPE	ØA	ØB	ØC	AMPS	POLE	CKT	PHASE	CKT	POLE	AMPS	ØA	ØB	ØC	TYPE	LENGTH	%VD	DESCRIPTION
PLATFORM LIGHT 1 x Z1 (R-1), A PLATFORM			L	100			20	1	1	A	2	1	20	200			L			RAMP 2 x Z1, A PLATFORM
SPARE			O		0		20	1	3	B	4	1	20		200		L			RAMP 2 x Z1, A PLATFORM
SPARE			O			0	20	1	5	C	6	1	20			180	L			LCP-120V
PLATFORM LIGHT 6 x CWM-1 (R-7), A PLATFORM	2.58	400	L	708			20	1	7	A	8	1	20	200			L			RAMP 2 x Z1, B PLATFORM
PLATFORM LIGHT 6 x CWM-1 (R-9), A PLATFORM	"	"	L		708		20	1	9	B	10	1	20		200		L			RAMP 2 x Z1, B PLATFORM
PLATFORM LIGHT 6 x CWM-1 (R-11), A PLATFORM	"	"	L			708	20	1	11	C	12	1	20			200	L			RAMP 2 x Z1, B PLATFORM
PLATFORM LIGHT 6 x CWM-1 (R-13), B PLATFORM			L	708			20	1	13	A	14	1	20	1,000			L			UFCS RACK
PLATFORM LIGHT 6 x CWM-1 (R-15), B PLATFORM			L		708		20	1	15	B	16	1	20		720		L	440	3.17	LCD SIGN#1 A PLATFORM (TVM)
PLATFORM LIGHT 6 x CWM-1 (R-17), B PLATFORM			L			708	20	1	17	C	18	1	20			500	L	300	2.16	VMS SIGN#2 A PLATFORM
PLATFORM LIGHT 1 x Z1 (R-19), B PLATFORM	0.96	470	L	100			20	1	19	A	20	1	20	500			L	"	"	VMS/LCD SIGN#3 A PLATFORM
~~PLAZA LIGHTING 2 x Z1 (R-21)~~	"	"	L		200		20	1	21	B	22	1	20		500		L	365	2.81	VMS/LCD SIGN#4 A PLATFORM
PLAZA LIGHTING 4 x Z1 (R-23)	"	"	L			400	20	1	23	C	24	1	20			720	L	"	"	LCD SIGN#5 A PLATFORM
PLAZA LIGHTING 2 x Z1 (R-25) — 1			L	200			20	1	25	A	26	1	20	500			L			VMS SIGN#6 A PLATFORM
PLAZA LIGHTING 2 x A2 + 1 x A3(R-27)	~~3~~	500	L		~~720~~ 240		20	1	27	B	28	1	20		500		L			VMS SIGN#7 A PLATFORM
PLAZA LIGHTING ~~2~~ x A2 + 1 x A3(R-29)	"	"	L			~~720~~ 180	20	1	29	C	30	1	20			720	L	415	3.17	LCD SIGN #1 B PLATFORM (TVM)
PLAZA LIGHTING 1 x A2 + 2 x A3 (R-31)	"	"	L	~~900~~ 300			20	1	31	A	32	1	20	500			L	365	2.81	VMS SIGN #3 B PLATFORM
RAINHOOD #1 4 x PF1 (R-33), A PLATFORM	1.76	440	L		344		20	1	33	B	34	1	20		500		L	"	"	VMS/LCD SIGN #2 B PLATFORM
RAINHOOD #1 3 x PF1 (R-35), B PLATFORM			L			258	20	1	35	C	36	1	20			720	L			LCD SIGN#4 B PLATFORM
CPL-C FEEDER			O	1,158			50	3	37	A	38	1	20	720			L			LCD SIGN#5 B PLATFORM
"			O		602		"	1	"	B	40	1	20		500		L			VMS SIGN#6 B PLATFORM
"			O			978	"	1	"	C	42	1	20			500	L			VMS SIGN#7 B PLATFORM
SUB-TOTALS				3,874	3282	3,772								3620	3120	3540				SUB-TOTALS
TOTAL CONNECTED LOAD				7,494	6,402	7,312														

DRFI 10725

TOTAL PANEL 3Ø CONNECTED LOAD: 21,208 VA — 59 AMPS
TOTAL PANEL DEMAND LOAD: 25,826 VA — 72 AMPS
SHORT CIRCUIT MOTOR CONTRIBUTION: 0 AMPS

PANEL DEMAND CALCULATIONS	TYPE	CONN. LOAD	DEMAND FACTOR	DEMAND LOAD
TOTAL LIGHTING & LCL LOAD <1>	L	18,470	125%	23,088
TOTAL MOTOR LOAD	M	0	100%	0
TOTAL GEN REC LOAD	R	0	100%	0
TOTAL OTHER LOAD	O	2,738	100%	2,738
25% LARGEST MOTOR LOAD	M	0	25%	0
TOTAL DEMAND LOAD (VA)		21,208		25,826

NOTES:
<1> LCL:- LONG CONTINOUS LOAD. PER NEC DEFINITIONS AND ARTICLE 230.42 THE FEEDER CONDUCTORS FOR ANY LOAD ENERGISED FOR LONGER THAN 3 HOURS HAS TO BE RATED FOR THAT LOAD PLUS 25%.
<2> PRELIMINARY MIMIMUM AIC RATING TO BE UPDATED UPON RECIEPT OF AVAILABLE SHORT CIRCUIT RECEIVED FROM TPSS\

PANEL: CPL-B

LOCATION: C/S ROOM
MOUNTING: SURFACE
GROUND BUS: COPPER
NUETRAL BUS: 225 AMPS 4-WIRE

VOLTAGE: 208/120 3 Ø
MAIN: 225 AMPS
BUS: 225 AMPS
<2> AIC RATING: 22 KAMPS

DESCRIPTION	%VD	LENGTH	TYPE	ØA	ØB	ØC	AMPS	POLE	CKT	PHASE	CKT	POLE	AMPS	ØA	ØB	ØC	TYPE	LENGTH	%VD	DESCRIPTION
TOS BOOTH RECAPTACLES			R	360			20	1	1	A	2	1	20	400			L			COMMUNICATION RACK #1A
SPARE			O		0		20	1	3	B	4	1	20		400		L			COMMUNICATION RACK #1B
SPARE			O			0	20	1	5	C	6	1	20			400	L			COMMUNICATION RACK #2
EF-7A (C/S ROOM FAN)			M	780			20	1	7	A	8	1	20	400			L			COMMUNICATION RACK #3
-			M		780		20	1	9	B	10	1	20		400		L			COMMUNICATION RACK #4
-			M			780	20	1	11	C	12	1	20			400	L			COMMUNICATION RACK #5
VSS JBOX A PLATFORM (CEB), A PLATFORM	3.1	280	L	180			20	1	13	A	14	1	20	400			L			COMMUNICATION RACK #6A
PA/VMS JBOX A PLATFORM (CEB), A PLATFORM	"	"	L		180		20	1	15	B	16	1	20		400		L			COMMUNICATION RACK #6B
GUIDEWAY CAMERA 782+17			L			180	20	1	17	C	18	1	20			0	O			SPARE
GUIDEWAY CAMERA 769+80			L	180			20	1	19	A	20	1	20	0			O			SPARE
GUIDEWAY CAMERA 755+85			L		180		20	1	21	B	22	1	20		240		L			FACP
GUIDEWAY CAMERA 748+00			L			180	20	1	23	C	24	1	20			180	L			TC-LCP
VSS JBOX B PLATFORM (CEB), B PLATFORM			L	180			20	1	25	A	26	2	150	10,150			O			TC-CPL TRANSFORMER
PA/VMS JBOX A PLATFORM (CEB), B PLATFORM			L		180		20	1	27	B	28	-	-		10,150		O			-
SPARE			O			0	20	1	29	C	30	1	20			100	M			MOTORIZED INTAKE DAMPER (MOD)
SPARE			O	0			20	1	31	A	32	1	20	100			L			EF-7 CONTROL
SPARE			O		0		20	1	33	B	34	1	20		0		O			SPARE
SPARE			O			0	20	1	35	C	36	1	20			180	L			TELEPHONE BACKBOARD(C/S ROOM MODEM)
~~SPARE~~ TOS EXTERIOR LIGHT			O	~~0~~ 90			20	1	37	A	38	1	20	0			O			SPARE
TRAIN OPERATOR SUPERVISER BOOTH 2xS-1 + 3x S-1A			L		320		20	1	39	B	40	1	20		0		O			SPARE
C/S ROOM INTERIOR LIGHTS (12)			L			480	20	1	41	C	42	1	20			0	O			SPARE
SUB-TOTALS				1,680	1640	1,620								11450	11590	1260				SUB-TOTALS
TOTAL CONNECTED LOAD				13,130	13,230	2,880														

DRFI 10725

TOTAL PANEL 3Ø CONNECTED LOAD: 29,240 VA — 81 AMPS
TOTAL PANEL DEMAND LOAD: 31,360 VA — 87 AMPS
SHORT CIRCUIT MOTOR CONTRIBUTION: 14,640 AMPS

PANEL DEMAND CALCULATIONS	TYPE	CONN. LOAD	DEMAND FACTOR	DEMAND LOAD
TOTAL LIGHTING & LCL LOAD <1>	L	6,140	125%	7,675
TOTAL MOTOR LOAD	M	2,440	100%	2,440
TOTAL GEN REC LOAD	R	360	100%	360
TOTAL OTHER LOAD	O	20,300	100%	20,300
25% LARGEST MOTOR LOAD	M	2,340	25%	585
TOTAL DEMAND LOAD (VA)		29,240		31,360

NOTES:
<1> LCL:- LONG CONTINOUS LOAD. PER NEC DEFINITIONS AND ARTICLE 230.42 THE FEEDER CONDUCTORS FOR ANY LOAD ENERGISED FOR LONGER THAN 3 HOURS HAS TO BE RATED FOR THAT LOAD PLUS 25%.
<2> PRELIMINARY MIMIMUM AIC RATING TO BE UPDATED UPON RECIEPT OF AVAILABLE SHORT CIRCUIT RECEIVED FROM TPSS\

PANEL: EPL-A

LOCATION: C/S ROOM
MOUNTING: SURFACE
GROUND BUS: COPPER
NUETRAL BUS: 225 AMPS 4-WIRE

VOLTAGE: 208/120 3 Ø
MAIN: 150 AMPS
BUS: 225 AMPS
<2> AIC RATING: 100 KAMPS

DESCRIPTION	%VD	LENGTH	TYPE	ØA	ØB	ØC	AMPS	POLE	CKT	PHASE	CKT	POLE	AMPS	ØA	ØB	ØC	TYPE	LENGTH	%VD	DESCRIPTION
PLATFORM LIGHT 8xO10 (R-2), A PLATFORM	1.47	400	L	688			20	1	1	A	2	1	20	688			L			PLATFORM LIGHT 8xO10 (R-28), B PLATFORM
PLATFORM LIGHT 8xR20 (R-4),A PLATFORM	"	"	L		352		20	1	3	B	4	1	20		352		L			PLATFORM LIGHT 8xR20 (R-30), B PLATFORM
PLATFORM LIGHT 2 x Z-3 (R-6),A PLATFORM	"	"	L			400	20	1	5	C	6	1	20			400	L			PLATFORM LIGHT 2 X Z-3 (R-32), B PLATFORM
RAINHOOD #1 (R-8), A TVM	2.11	440	L	840			20	1	7	A	8	1	20	480			L			RAINHOOD #1 (R-34), B TVM
RAINHOOD #1 (R-10), A TVM	"	"	L		840		20	1	9	B	10	1	20		480		L			RAINHOOD #1 (R-36), B TVM
RAINHOOD #2 (R-12), A PLATFORM	3.29	365	L			900	20	1	11	C	12	1	20			900	L			RAINHOOD #2 (R-38), B PLATFORM
RAINHOOD #2 (R-14), A PLATFORM	"	"	L	900			20	1	13	A	14	1	20	900			L			RAINHOOD #2 (R-40), B PLATFORM
RAINHOOD #3 (R-16), A PLATFORM	2.4	266	L		900		20	1	15	B	16	1	20		900		L			RAINHOOD #3 (R-42), B PLATFORM
RAINHOOD #3 (R-18), A PLATFORM	"	"	L			900	20	1	17	C	18	1	20			900	L			RAINHOOD #3 (R-44), B PLATFORM
RAINHOOD #4 (R-20), A PLATFORM	2.4	170	L	900			20	1	19	A	20	1	20	480			L			RAINHOOD #4 (R-46), B PLATFORM
RAINHOOD #4 (R-22), A PLATFORM	"	"	L		900		20	1	21	B	22	1	20		480		L			RAINHOOD #4 (R-48), B PLATFORM
PTHP-1 (TOS)			L			2,200	20	1	23	C	~~24~~ 28	1	~~20~~			0	~~O~~			~~SPARE~~ SHUNT TRIP 120V (DWH-1)
-			L	2,200			20	1	25	A	~~26~~ 24	2	30	2,400			M			DWH-1 HEAT PUMP (TOS)
GRAND PYLON # 1 (R24), A PLATFORM	1.52	330	L		300		20	1	27	B	~~28~~ 26	-	-		2,400		M			-
GRAND PYLON #2 (R26), B PLATFORM	2.35	510	L			300	20	1	29	C	30	1	20			540	R			TOS BOOTH RECEPTACLES
SPARE			O	0			20	1	31	A	32	1	20	540			R			-
COMM RACK 1/2 MAINTENANCE RECEPTACLE			R		360		20	1	33	B	34	1	20		180		R			IRREGATION CONTROLLER
COMM RACK 3/4 MAINTENANCE RECEPTACLE			R			360	20	1	35	C	~~36~~ 42	1	~~20~~			0	~~O~~			~~SPARE~~ SHUNT TRIP 120V (RTU-7A)
COMM RACK 5/6 MAINTENANCE RECEPTACLE			R	360			20	1	37	A	~~38~~ 36	3	60	3,000			M			RTU-7A (C/S ROOM HVAC)
C/S ROOM MAINTENANCE RECEPTACLES			R		720		20	1	39	B	~~40~~ 38	-	-		3,000		M			-
C/S ROOM MAINTENANCE RECEPTACLES			R			540	20	1	41	C	~~42~~ 40	-	-			3,000	M			-
SUB-TOTALS				5,888	4372	5,600								8488	7792	5740				SUB-TOTALS
TOTAL CONNECTED LOAD				14,376	12,164	11,340														

TOTAL PANEL 3Ø CONNECTED LOAD: 37,880 VA — 105 AMPS
TOTAL PANEL DEMAND LOAD: 45,250 VA — 126 AMPS
SHORT CIRCUIT MOTOR CONTRIBUTION: 82,800 AMPS

(DRFI 11131)

PANEL DEMAND CALCULATIONS	TYPE	CONN. LOAD	DEMAND FACTOR	DEMAND LOAD
TOTAL LIGHTING & LCL LOAD <1>	L	20,480	125%	25,600
TOTAL MOTOR LOAD	M	13,800	100%	13,800
TOTAL GEN REC LOAD	R	3,600	100%	3,600
TOTAL OTHER LOAD	O	0	100%	0
25% LARGEST MOTOR LOAD	M	9,000	25%	2,250
TOTAL DEMAND LOAD (VA)		37,880		45,250

NOTES:
<1> LCL:- LONG CONTINOUS LOAD. PER NEC DEFINITIONS AND ARTICLE 230.42 THE FEEDER CONDUCTORS FOR ANY LOAD ENERGISED FOR LONGER THAN 3 HOURS HAS TO BE RATED FOR THAT LOAD PLUS 25%.
<2> PRELIMINARY MIMIMUM AIC RATING TO BE UPDATED UPON RECIEPT OF AVAILABLE SHORT CIRCUIT RECEIVED FROM TPSS

PANEL: EPL-B

LOCATION: C/S ROOM
MOUNTING: SURFACE
GROUND BUS: COPPER
NUETRAL BUS: 225 AMPS 4-WIRE

VOLTAGE: 208/120 3 Ø
MAIN: 150 AMPS
BUS: 225 AMPS
<2> AIC RATING: 65 KAMPS

DESCRIPTION	%VD	LENGTH	TYPE	ØA	ØB	ØC	AMPS	POLE	CKT	PHASE	CKT	POLE	AMPS	ØA	ØB	ØC	TYPE	LENGTH	%VD	DESCRIPTION
TVM#1 A PLATFORM	2.54	440	L	1,400			20	1	1	A	2	1	20	400			L	440	1.55	MAPCASE #1 & RECEPT A PLATFORM TVM
TVM#2 A PLATFORM	"	"	L		1,400		20	1	3	B	4	1	20		800		L	"	"	MAPCASE #2 & 3 & RECEPTS A PLATFORM
TVM#3 A PLATFORM	"	"	L			1,400	20	1	5	C	6	1	20			180	L	"	"	TVM PAYPHONE A PLATFORM
SPARE			O	0			20	1	7	A	8	1	20	400			L			MAPCASE #1 & RECEPT B PLATFORM TVM
SPARE			O		0		20	1	9	B	10	1	20		800		L			MAPCASE #2 & 3 & RECEPTS B PLATFORM
SPARE			O			0	20	1	11	C	12	1	20			180	L			TVM PAYPHONE B PLATFORM
GTEL#1 A PLATFORM (TVM#1)			L	35			20	1	13	A	14	1	20	400			L			BATTERY MANAGEMENT SYSTEM
GTEL#2 A PLATFORM (TVM#1)			L		35		20	1	15	B	16	1	20		0		O			SPARE
SPARE			O			0	20	1	17	C	18	1	20			0	O			SPARE
EWH-1 (TOS)			L	750			20	1	19	A	20	1	20	0			O			SPARE
-			L		750		20	1	21	B	22	2	50		0		O			SPARE
EWH-2 (TOS)			L			750	20	1	23	C	24					0	O			SPARE
-			L	750			20	1	25	A	26	1	20	0			O			SPARE
EF-7B			M		15		20	1	27	B	~~26~~ 42	1	~~20~~		0		~~O~~			~~SPARE~~ SHUNT TRIP 120V (RTU-7B)
TVM#1 B PLATFORM			L			1,400	20	1	29	C	~~30~~ 28	1	20			360	R			RTU-7A & 7B MAINTENANCE RECEPTACLES
TVM#2 B PLATFORM			L	1,400			20	1	31	A	~~32~~ 30	1	20	360			R			T/C RACK 8/9 MAINTANENCE
TVM#3 B PLATFORM (FUTURE)			L		1,400		20	1	33	B	~~34~~ 32	1	20		360		R			T/C RACK 10/11 MAINTANENCE
GTEL#3 B PLATFORM FARE GATES			L			35	20	1	35	C	~~36~~ 34	1	20			360	R			T/C RACK 12 MAINTANENCE
GTEL#4 B PLATFORM FARE GATES			L	35			20	1	37	A	~~38~~ 36	3	60	3,000			M			RTU-7B (C/S ROOM HVAC)
SPARE			O		0		20	1	39	B	~~40~~ 38	-	-		3,000		M			-
SPARE			O			0	20	1	41	C	~~42~~ 40	-	-			3,000	M			-
SUB-TOTALS				4,370	3600	3,585								4560	4960	4080				SUB-TOTALS
TOTAL CONNECTED LOAD				8,930	8,560	7,665														

TOTAL PANEL 3Ø CONNECTED LOAD: 25,155 VA — 70 AMPS
TOTAL PANEL DEMAND LOAD: 31,080 VA — 86 AMPS
SHORT CIRCUIT MOTOR CONTRIBUTION: 54,090 AMPS

(DRFI 11131)

PANEL DEMAND CALCULATIONS	TYPE	CONN. LOAD	DEMAND FACTOR	DEMAND LOAD
TOTAL LIGHTING & LCL LOAD <1>	L	14,700	125%	18,375
TOTAL MOTOR LOAD	M	9,015	100%	9,015
TOTAL GEN REC LOAD	R	1,440	100%	1,440
TOTAL OTHER LOAD	O	0	100%	0
25% LARGEST MOTOR LOAD	M	9,000	25%	2,250
TOTAL DEMAND LOAD (VA)		25,155		31,080

NOTES:
<1> LCL:- LONG CONTINOUS LOAD. PER NEC DEFINITIONS AND ARTICLE 230.42 THE FEEDER CONDUCTORS FOR ANY LOAD ENERGISED FOR LONGER THAN 3 HOURS HAS TO BE RATED FOR THAT LOAD PLUS 25%.
<2> PRELIMINARY MIMIMUM AIC RATING TO BE UPDATED UPON RECIEPT OF AVAILABLE SHORT CIRCUIT RECEIVED FROM TPSS

KEYNOTE:

(1) TVM & SAV TO HAVE DEDICATED NEUTRALS ON CIRCUITS.

SRJV FEB 07 2014 ISSUED FOR CONSTRUCTION

Hernandez, Hector L. 1:44 PM 14-Jan-14

THE PREPARATION OF THIS DRAWING HAS BEEN FINANCED BY THE TAXES OF THE CITIZENS OF LOS ANGELES COUNTY AND OF THE STATE OF CALIFORNIA.

REV	DATE	BY	APP	REG NO	EXPIRES	SEAL HOLDER	DESCRIPTION
1	1/14/14	AN	FSW	E11465	12/31/15	F. WALIEDDINE	ECI 79
0	5/30/13	AN	FSW	E11465	12/31/13	F. WALIEDDINE	APPROVED FOR CONSTRUCTION

DESIGNED BY A. NALBANDIAN
DRAWN BY H. HERNANDEZ
CHECKED BY F. WALIEDDINE
IN CHARGE F. WALIEDDINE
DATE 5/30/13

REGISTERED PROFESSIONAL ENGINEER — FADI S. WALIEDDINE — No. E11465 — Exp. 12-31-15 — ELECTRICAL — STATE OF CALIFORNIA

Exposition Metro Line Construction Authority
Expo

EXPO SKANSKA RADOS
444 South Flower Street
Suite 2200
Los Angeles, CA 90071
TEL (213) 443-7463
FAX (213) 362-9481

PARSONS BRINCKERHOFF

CURRENT STATUS

EXPOSITION LRT PROJECT- PHASE 2
COLORADO/4TH STREET STATION
PANEL SCHEDULE

Exposition Construction Authority Approved for Construction Drawings - AFC
FEB 06 2014

CONTRACT NO XP8902-002
DRAWING NO E-S7-012
REV 1
SCALE NONE
SHEET NO

C:\projectwise\pb\projectwise\inthernandezh\dms09028\expo2-E-S7-013.dwg

	LOCATION:	C/S ROOM	PANEL: LIGHTING CONTROL PANEL (LCP)						
	MOUNTING:	SURFACE	48 RELAY PANEL						
CPL-A CIRCUIT #	CPL-A LIGHTING DESCRIPTION	RELAY AMPS	RELAY POLE	RELAY #	RELAY #	RELAY POLE	RELAY AMPS	EPL-A LIGHTING DESCRIPTION	EPL-A CIRCUIT #
1	PLATFORM LIGHT 1 x Z1 (R-1), A PLATFORM	20	2	1	2	2	20	PLATFORM LIGHT 8xO10 (R-2), A PLATFORM	1
3	SPARE	20	2	3	4	2	20	PLATFORM LIGHT 8xR20 (R-4),A PLATFORM	3
5	SPARE	20	2	5	6	2	20	PLATFORM LIGHT 2 x Z-3 (R-6),A PLATFORM	5
7	PLATFORM LIGHT 6 x CWM-1 (R-7), A PLATFORM	20	2	7	8	2	20	RAINHOOD #1 (R-8), A TVM	7
9	PLATFORM LIGHT 6 x CWM-1 (R-9), A PLATFORM	20	2	9	10	2	20	RAINHOOD #1 (R-10), A TVM	9
11	PLATFORM LIGHT 6 x CWM-1 (R-11), A PLATFORM	20	2	11	12	2	20	RAINHOOD #2 (R-12), A PLATFORM	11
13	PLATFORM LIGHT 6 x CWM-1 (R-13), B PLATFORM	20	2	13	14	2	20	RAINHOOD #2 (R-14), A PLATFORM	13
15	PLATFORM LIGHT 6 x CWM-1 (R-15), B PLATFORM	20	2	15	16	2	20	RAINHOOD #3 (R-16), A PLATFORM	15
17	PLATFORM LIGHT 6 x CWM-1 (R-17), B PLATFORM	20	2	17	18	2	20	RAINHOOD #3 (R-18), A PLATFORM	17
19	PLATFORM LIGHT 1 x Z1 (R-19), B PLATFORM	20	2	19	20	2	20	RAINHOOD #4 (R-20), A PLATFORM	19
21	PLAZA LIGHTING 2 x Z1 (R-21)	20	2	21	22	2	20	RAINHOOD #4 (R-22), A PLATFORM	21
23	PLAZA LIGHTING 4 x Z1 (R-23)	20	2	23	24	2	20	GRAND PYLON #1 (R-24), A PLATFORM	23
25	PLAZA LIGHTING 2 x Z1 (R-25)	20	2	25	26	2	20	GRAND PYLON #2 (R-26), B PLATFORM	25
27	PLAZA LIGHTING 2 x A2 + 1 x A3(R-27)	20	2	27	28	2	20	PLATFORM LIGHT 8xO10 (R-28), B PLATFORM	2
29	PLAZA LIGHTING 2 x A2 + 1 x A3(R-29)	20	2	29	30	2	20	PLATFORM LIGHT 8xR20 (R-30), B PLATFORM	4
31	PLAZA LIGHTING 1 x A2 + 2 x A3 (R-31)	20	2	31	32	2	20	PLATFORM LIGHT 2 X Z-3 (R-32), B PLATFORM	6
33	RAINHOOD #1 3 x PF1 (R-33), A PLATFORM	20	2	33	34	2	20	RAINHOOD #1 (R-34), B TVM	8
35	RAINHOOD #1 3 x PF1 (R-35), B PLATFORM	20	2	35	36	2	20	RAINHOOD #1 (R-36), B TVM	10
2	RAMP 2 x Z1, A PLATFORM	20	2	37	38	2	20	RAINHOOD #2 (R-38), B PLATFORM	12
4	RAMP 2 x Z1, A PLATFORM	20	2	39	40	2	20	RAINHOOD #2 (R-40), B PLATFORM	14
6	ACSDM	20	2	41	42	2	20	RAINHOOD #3 (R-42), B PLATFORM	16
8	RAMP 2 x Z1, B PLATFORM	20	2	43	44	2	20	RAINHOOD #3 (R-44), B PLATFORM	18
10	RAMP 2 x Z1, B PLATFORM	20	2	45	46	2	20	RAINHOOD #4 (R-46), B PLATFORM	20 & 27
12	RAMP 2 x Z1, B PLATFORM	20	2	47	48	2	20	RAINHOOD #4 (R-48), B PLATFORM	22 & 29

DRFI 10725 — 1

	LOCATION:	C/S ROOM	PANEL: LIGHTING CONTROL PANEL (LCP-1)						
	MOUNTING:	SURFACE	48 RELAY PANEL						
CPL-C CIRCUIT #	CPL-A LIGHTING DESCRIPTION	RELAY AMPS	RELAY POLE	RELAY #	RELAY #	RELAY POLE	RELAY AMPS	EPL-A LIGHTING DESCRIPTION	EPL-C CIRCUIT #
1	RAINHOOD # 5 FAREBARRIER PLATF B 3 x PF1 (R-1)	20	2	1	2	2	20	RAINHOOD # 5 FAREBARRIER (R-2)	1
3	RAINHOOD # 6 MAPCASE PLATF B 3 x PF1 (R-3)	20	2	3	4	2	20	RAINHOOD # 5 FAREBARRIER (R-4)	3
5	RAINHOOD # 7 A PLATFORM (TVM #3) (R-5)	20	2	5	6	2	20	RAINHOOD # 6 MAPCASE AREA (R-6)	5
7	SPARE	20	2	7	8	2	20	RAINHOOD # 6 MAPCASE AREA (R-8)	7
9	C/S ROOM EXTERIOR LIGHT 4 x S2 (R-9)	20	2	9	10	2	20	RAINHOOD # 7 A PLATFORM (TVM #3) (R-10)	9
11	SPARE	20	2	11	12	2	20	RAINHOOD # 7 A PLATFORM (TVM #3) (R-12)	11
13	SPARE	20	2	13	14	2	20	SPARE	13
15	SPARE	20	2	15	16	2	20	SPARE	15
17	SPARE	20	2	17	18	2	20	SPARE	17
19	SPARE	20	2	19	20	2	20	SPARE	19
21	SPARE	20	2	21	22	2	20	SPARE	21
23	SPARE	20	2	23	24	2	20	SPARE	23
25	SPARE	20	2	25	26	2	20	SPARE	25
27	SPARE	20	2	27	28	2	20	SPARE	2
29	SPARE	20	2	29	30	2	20	SPARE	4
31	SPARE	20	2	31	32	2	20	SPARE	6
33	SPARE	20	2	33	34	2	20	SPARE	8
35	SPARE	20	2	35	36	2	20	SPARE	10
2	SPARE	20	2	37	38	2	20	SPARE	12
4	SPARE	20	2	39	40	2	20	SPARE	14
6	SPARE	20	2	41	42	2	20	SPARE	16
8	SPARE	20	2	43	44	2	20	SPARE	18
10	SPARE	20	2	45	46	2	20	SPARE	20
12	SPARE	20	2	47	48	2	20	SPARE	22

LOCATION: C/S ROOM
MOUNTING: SURFACE
GROUND BUS: COPPER
NUETRAL BUS: 100 AMPS 4-WIRE
PANEL: CPL-C
VOLTAGE: 208/120 3 Ø
MAIN: 225 AMPS
BUS: 100 AMPS
<2> AIC RATING: 22 KAMPS

DESCRIPTION	%VD	LENGTH	TYPE	LOAD (VA) ØA	ØB	ØC	BREAKER AMPS	POLE	CKT	PHASE A	B	C	BREAKER CKT	POLE	AMPS	LOAD (VA) ØA	ØB	ØC	TYPE	LENGTH	%VD	DESCRIPTION
RAINHOOD # 5 FAREBARRIER PLATF B 3 x PF1 (R-1)			L	258			20	1	1	•			2	1	20	0			O			SPARE
RAINHOOD # 6 MAPCASE PLATF B 3 x PF1 (R-3)			L		258		20	1	3		•		4	1	20		0		O			SPARE
RAINHOOD # 7 A PLATFORM (TVM #3) (R-5)			L			258	20	1	5			•	6	1	20			0	O			SPARE
LCD SIGN A PLATFORM (TVM #3)			L	720			20	1	7	•			8	1	20	0			O			SPARE
C/S ROOM EXTERIOR LIGHT 4 x S2 (R-9)			L		344		20	1	9		•		10	1	20		0		O			SPARE
LCD SIGN B PLATFORM MAPCASES AREA			L			720	20	1	11			•	12	1	20			0	O			SPARE
SPARE			O	0			20	1	13	•			14	1	20	180			L			LCP1 - 120V PANEL
SPARE			O		0		20	1	15		•		16	1	20		0		O			SPARE
SPARE			O			0	20	1	17			•	18	1	20			0	O			SPARE
SPACE			O	0			20	1	19	•			20	1	20	0			O			SPARE
SPACE			O		0		20	1	21		•		22	1	20		0		O			SPARE
SPACE			O			0	20	1	23			•	24	1	20			0	O			SPARE
SPACE			O	0			20	1	25	•			26	1	20	0			O			SPARE
SPACE			O		0		20	1	27		•		28	1	20		0		O			SPARE
SPACE			O			0	20	1	29			•	30	1	20			0	O			SPARE
SPACE			O	0			20	1	31	•			32	1	20	0			O			SPARE
SPACE			O		0		20	1	33		•		34	1	20		0		O			SPARE
SPACE			O			0	20	1	35			•	36	1	20			0	O			SPARE
SPACE			O	0			20	1	37	•			38	1	20	0			O			SPARE
SPACE			O		0		20	1	39		•		40	1	20		0		O			SPARE
SPACE			O			0	20	1	41			•	42	1	20			0	O			SPARE
SUB-TOTALS				978	602	978										180	0	0				SUB-TOTALS
TOTAL CONNECTED LOAD				1,158	602	978																

TOTAL PANEL 3ø CONNECTED LOAD: 2,738 VA — 8 AMPS
TOTAL PANEL DEMAND LOAD: 3,423 VA — 10 AMPS
SHORT CIRCUIT MOTOR CONTRIBUTION: 0 AMPS

PANEL DEMAND CALCULATIONS			TYPE	CONN. LOAD	DEMAND FACTOR	DEMAND LOAD
TOTAL LIGHTING & LCL LOAD <1>			L	2,738	125%	3,423
TOTAL MOTOR LOAD			M	0	100%	0
TOTAL GEN REC LOAD			R	0	100%	0
TOTAL OTHER LOAD			O	0	100%	0
25% LARGEST MOTOR LOAD			M	0	25%	0
TOTAL DEMAND LOAD (VA)				2738		3,423

NOTES:
<1> LCL:- LONG CONTINOUS LOAD. PER NEC DEFINITIONS AND ARTICLE 230.42 THE FEEDER CONDUCTORS FOR ANY LOAD ENERGISED FOR LONGER THAN 3 HOURS HAS TO BE RATED FOR THAT LOAD PLUS 25%.
<2>
PRELIMINARY MIMIMUM AIC RATING TO BE UPDATED UPON RECIEPT OF AVAILABLE SHORT CIRCUIT RECEIVED FROM TPSS\

LOCATION: C/S ROOM
MOUNTING: SURFACE
GROUND BUS: COPPER
NUETRAL BUS: 225 AMPS 4-WIRE
PANEL: EPL-C
VOLTAGE: 208/120 3 Ø
MAIN: 150 AMPS
BUS: 225 AMPS
<2> AIC RATING 22 KAMPS

DESCRIPTION	%VD	LENGTH	TYPE	LOAD (VA) ØA	ØB	ØC	BREAKER AMPS	POLE	CKT	PHASE A	B	C	BREAKER CKT	POLE	AMPS	LOAD (VA) ØA	ØB	ØC	TYPE	LENGTH	%VD	DESCRIPTION
RAINHOOD # 5 FAREBARRIER (R-2)			L	400			20	1	1	•			2	1	20	400			L			MAPCASE #1 PLAZZA
RAINHOOD # 5 FAREBARRIER (R-4)			L		400		20	1	3		•		4	1	20		800		L			MAPCASE #2 & #3PLAZZA
RAINHOOD # 6 MAPCASE AREA (R-6)			L			560	20	1	5			•	6	1	20			800	L			MAPCASE #4 & #5 PLAZZA
RAINHOOD # 6 MAPCASE AREA (R-8)			L	560			20	1	7	•			8	1	20	400			L	440	1.55	MAPCASE #1 A PLATFORM TVM#3
RAINHOOD # 7 A PLATFORM (TVM #3) (R-10)	1.47	400	L		840		20	1	9		•		10	1	20		800		L	440	1.55	MAPCASE #2 & #3 A PLATFORM TVM#3
RAINHOOD # 7 A PLATFORM (TVM #3) (R-12)	"	"	L			840	20	1	11			•	12	1	20			180	L	440	1.55	TVM PAYPHONE A PLATFORM
FARE GATE #1 PLAZZA			L	1,150			20	1	13	•			14	1	20	1,400			L	440	1.55	TVM A PALTFORM TICKETING AREA #3
FARE GATE #2 PLAZZA			L		1,150		20	1	15		•		16	1	20		1,400		L	440	1.55	TVM A PALTFORM TICKETING AREA #3
FARE GATE #3 PLAZZA			L			1,150	20	1	17			•	18	1	20			800	L	440	1.55	MAPCASE #4 & #5 A PLATFORM TVM#3
FARE GATE #4 PLAZZA			L	1,150			20	1	19	•			20	1	20	0			O			SPARE
FARE GATE #5 PLAZZA			L		1,150		20	1	21		•		22	1	20		0		O			SPACE
FARE GATE #6 PLAZZA			L			1,150	20	1	23			•	24	1	20			0	O			SPACE
FARE GATE #1 A PATFORM (TVM #1)	440	1.55	L	1,150			20	1	25	•			26	1	20	0			O			SPACE
FARE GATE #2 A PATFORM (TVM #1)	440	1.55	L		1,150		20	1	27		•		28	1	20		0		O			SPACE
FARE GATE #3 A PATFORM (TVM #1)	440	1.55	L			1,150	20	1	29			•	30	1	20			0	O			SPACE
FARE GATE #4 A PATFORM (TVM #1)	440	1.55	O	1,150			20	1	31	•			32	1	20	0			O			SPACE
SPARE			O		0		20	1	33		•		34	1	20		0		O			SPACE
SPARE			O			0	20	1	35			•	36	1	20			0	O			SPACE
SPARE			O	0			20	1	37	•			38	1	20	0			O			SPACE
SPARE			O		0		20	1	39		•		40	1	20		0		O			SPACE
SPARE			O			0	20	1	41			•	42	1	20			0	O			SPACE
SUB-TOTALS				5,560	4690	4,850										2200	3000	1780				SUB-TOTALS
TOTAL CONNECTED LOAD				7,760	7,690	6,630																

TOTAL PANEL 3ø CONNECTED LOAD: 22,080 VA — 61 AMPS
TOTAL PANEL DEMAND LOAD: 27,313 VA — 76 AMPS
SHORT CIRCUIT MOTOR CONTRIBUTION: 0 AMPS

PANEL DEMAND CALCULATIONS			TYPE	CONN. LOAD	DEMAND FACTOR	DEMAND LOAD
TOTAL LIGHTING & LCL LOAD <1>			L	20,930	125%	26,163
TOTAL MOTOR LOAD			M	0	100%	0
TOTAL GEN REC LOAD			R	0	100%	0
TOTAL OTHER LOAD			O	1,150	100%	1,150
25% LARGEST MOTOR LOAD			M	0	25%	0
TOTAL DEMAND LOAD (VA)				22,080		27,313

NOTES:
<1> LCL:- LONG CONTINOUS LOAD. PER NEC DEFINITIONS AND ARTICLE 230.42 THE FEEDER CONDUCTORS FOR ANY LOAD ENERGISED FOR LONGER THAN 3 HOURS HAS TO BE RATED FOR THAT LOAD PLUS 25%.
<2>
PRELIMINARY MIMIMUM AIC RATING TO BE UPDATED UPON RECIEPT OF AVAILABLE SHORT CIRCUIT RECEIVED FROM TPSS

SRJV
FEB 07 2014
ISSUED FOR CONSTRUCTION

THE PREPARATION OF THIS DRAWING HAS BEEN FINANCED BY THE TAXES OF THE CITIZENS OF LOS ANGELES COUNTY AND OF THE STATE OF CALIFORNIA.

REV	DATE	BY	APP	REG NO	EXPIRES	SEAL HOLDER	DESCRIPTION
1 (triangle)	1/14/14	AN	FSW	E11465	12/31/15	F. WALIEDDINE	ECI 79
0	5/30/13	AN	FSW	E11465	12/31/13	F. WALIEDDINE	APPROVED FOR CONSTRUCTION

DESIGNED BY A. NALBANDIAN
DRAWN BY H. HERNANDEZ
CHECKED BY F. WALIEDDINE
IN CHARGE F. WALIEDDINE
DATE 5/30/13

REGISTERED PROFESSIONAL ENGINEER — FADI S. WALIEDDINE — No. E11465 — Exp. 12-31-15 — ELECTRICAL — STATE OF CALIFORNIA

Exposition Metro Line Construction Authority
Expo

EXPO SKANSKA RADOS
444 South Flower Street
Suite 2200
Los Angeles, CA 90071
TEL (213) 443-7463
FAX (213) 362-9481

PARSONS BRINCKERHOFF
CURRENT STATUS

EXPOSITION LRT PROJECT- PHASE 2
COLORADO/4TH STREET STATION
PANEL SCHEDULE

Exposition Construction Authority
Approved for Construction
Drawings - AFC
FEB 06 2014

CONTRACT NO XP8902-002
DRAWING NO E-S7-013 REV 1
SCALE NONE
SHEET NO

14-Jan-14 1:48 PM Hernandez, Hector L.

C:\projectwise\pb\projectwise\int\hernandezh\dms09028\expo2-E-S7-014.dwg

Lighting Drawing E-S7-111, 125

To A Platform in Duct A031A

CPL-A	1	2w#10	Lites Z1 Plat, Exit Stair
	2	2h3w#10	Lites Z1 N Ramp
	4	"	"
	7	3h4w#10	Lites CWM-1
	9	"	
	11	"	
	33	2w#10	TVM Rainhood PF-1
CPL-C	5	2w#10	TVM #3 Rainhood PF-1

Total #10 wire
(1x4w)+(1x3w)+(3x2w)=13wires

To A Platform in Duct A032A

EPL-A	1	3h4w#10	Lites O-10
	3	"	"
	5	"	"
	7	2h3w#8	Rainhood (TVM)
	9	"	"
	11	2h3w#8	Rainhood
	13	"	"
	15	2h3w#8	Rainhood
	17	"	"
	19	2h3w#10	Rainhood
	21	"	"
	27	2w#10	N Grand Pylon
EPL-C	9	2h3w#8	Rainhood (TVM #3)
	11	"	

Total #10 wire
(1x4w)+(1x3w)+(1x2w)=9wires
Total #8 wire
(4x3w)=12wires

Lighting Drawing E-S7-112

To B Platform in Duct A031B

CPL-A	8	3h4w#10	Lites Z1 S Ramp
	10	"	"
	12	"	"
	13	3h4w#10	Lites CWM-1
	15	"	
	17	"	
	19	2w#10	Lites Z1, Exit Stair
	21	3h4w#10	Lites Z1 Plaza Stairs
	23	"	"
	25	"	"
	27	3h4w#10	Lites A1 & A2 Plaza
	29	"	"
	31	"	"
	35	2w#10	TVM Rainhood PF-1
CPL-C	1	2w#10	Rainhood #5 PF-1
	3	2w#10	Rainhood #6 PF-1

Total #10 wire
(4x4w)+(4X2w)=24wires

To B Platform in Duct A032B

EPL-C	1	2h3w#10	Rainhood #5
	3	"	
	5	2h3w#10	Rainhood #6
	7	"	
EPL-A	2	3h4w#10	Lites O-10
	4	"	
	6	"	
	8	2h3w#8	Rainhood (TVM)
	10	"	
	12	2h3w#8	Rainhood
	14	"	
	16	2h3w#8	Rainhood
	18	"	
	20	2h3w#10	Rainhood
	22	"	
	29	2w#10	S Grand Pylon

Total #10 wire
(1x4w)+(3x3w)+(1x2w)=15wires
Total #8 wire
(3x3w)=9 wires

Power Drawing E-S7-113

To A Platform in Duct A031A

CPL-A	16	2w#8	LCD #1 @TVM A Plat
	18	2h3w#8	LCD #2 & 3
	20	"	"
	22	2h3w#10	VMS #1 & 2
	24	"	"
	26	2h3w#10	VMS #3 & 4
	28	"	"
CPL_B	13	2w#10	VSS Box, A Platform
	15	2w#10	VMS Box, A Platform
CPL_C	7	2w#8	LCD TVM #3 A Plat

Total #10 wire
(2x3w)+(2x2w)=10wires
Total #8 wire
(1x3w)+(2x2w)=7wires

To A Platform in Duct A032A

EPL-C	25	2w#4	FARE GATE TVM#1
	27	2w#4	"
	29	2w#4	"
	31	2w#4	"
EPL-B	1	2w#4	TVM #1 PLATF A
	3	2w#4	TVM#1 PLATF A
	5	2w#4	TVM#1 PLATF A
	2	3h4w#10	Mapcase
	4	"	Mapcase
	6	"	Payphone
	13	2w#12	GTEL PLATF A
	15	2w#12	GTEL PLATF A
EPL-C	8	3h4w#10	Mapcase TVM#3
	10	"	Mapcase TVM#3
	12	"	Payphone
	14	2w#4	TVM #3
	16	2w#4	TVM#3
	18	2w#10	Mapcase TVM#3

Total #12 wire
(2x2w)=4wires
Total #10 wire
(2x4w) + 2W=10wires
Total #4 wire
(9x2w)=18wires

Power Drawing E-S7-114

To B Platform in Duct A031B

CPL-A	30	2h#8	LCD#1 @ TVM B Plat
	32	2h3w#8	LCD # 1 & 2
	34	"	"
	36	2h3w#10	VMS # 1 & 2
	38	"	"
	40	2h3w#10	VMS # 3 & 4
	42	"	"
CPL-B	1	2w#10	TOS Booth lites
	39	2w#10	TOS Booth recepts
	25	2w#10	VSS Box, B Platform
	27	2w#10	VMS Box,B Platform
CPL-C	18	2h#8	LCD Mapcase B Platf

Total #10 wire
(2x3w)+(4x2w)=14wires
Total #8 wire
(1x3w)+(2x2w)=7wires

To B Platform in Duct A032B

EPL-C	2	3h4w#10	Mapcase Plazza
	4	"	
	6	"	
	13	2w#4	FARE GATE
	15	2w#4	"
	17	2w#4	"
	19	2w#4	"
	21	2w#4	"
	23	2w#4	"
EPL-A	26	2h3w#10	TOS Boot HVAC
	28	"	"
	30	2h3w#10	TOS Boot Recept
	32	"	"
EPL-B	8	3h4w#10	Mapcase
	10	"	"
	12	"	Payphone
	29	2w#4	TVM
	31	2w#4	"
	33	2w#4	"
	35	2w#12	GTEL PLATF B
	37	2w#12	GTEL PLATF B

Total #12 wire
(2x2w)=4wires
Total #10 wire
(2x3w)+(2x4w)=14wires
Total #4 wire
(9x2w)=18wires

Total to A Platform in Duct A031A	Total to A Platform in Duct A032A	Total to B Platform in Duct A031B	Total to B Platform in Duct A032B
# 10 = 23 wires # 8 = 7 wires OR 23c #10 wire + 7c #8 wire ** 4c # 10G + 1c #8G	# 4 = 8 wires # 10 = 19 wires # 8 = 12 wires #4 =18wires OR 4c # 12wire + 19c #10 wire + 12c #8 wire + 18c # 4 wire ** 1c #12c + 3c # 10G + 2c #8G + 2c #4G	# 10 = 38 wires # 8 = 7wires OR 38c # 10 wire + 7c # 8 wire ** 5c #10G + 2c #8G	# 12 = 4 wires # 10 = 29wires # 8 = 9wires #4 = 18 wires OR 4c # 12wire + 29c #10 wire +9c #8 wire +18c # 4 wire ** 1c #12G + 5c #10G + 2c #8G + 2c #4G

From Conduit #	To Conduit #	From Conduit #	To Conduit #	From Conduit #	To Conduit #	From Conduit #	To Conduit #	From Conduit #	To Conduit #	From Conduit #	To Conduit #	From Conduit #	To Conduit #	From Conduit #	To Conduit #	From Conduit #	To Conduit #
	A012 to CPL-A		A012A to CPL-B		A012A to CPL-C		A013 to EPL-A		A013A to EPL-B		A013D to EPL-C		A012C to LCP		A013C to LCP		A014B to LCP-1		A015B to LCP-1
												A031A	11c #10 wire	A032A	9c # 10wire 9c # 8wire	A031A	2c#10wire	A032A	3c#8
												A031B	20c #10 wire 3#10G	A032B	9c # 10wire 9c # 8wire 4#10G+2#8G	A031B	4c#10wire 2#10G	A032B	6c#10 2c#10G+1#8G
A031A	6c #10wire 5c #8wire 1#10G+1#8G	A031A	4c # 10 wire 1#10G	A031A	2c #8wire 1#8G	A032B	6c #10wire 1# 10G	A032A	4c #12wire 4c#10wire 6c#4wire 1#12G+1#10G+1#4G	A032A	6c #10wire 12c#4wire 1#10G+1#4G								
A031B	6c # 10 wire 5c # 8 wire 1#10G+1#8G	A031B	8c # 10 wire 1#10G	A031B	2c #8wire 1#8G			A032B	4c #12wire 4c#10wire 6c#4wire 1#12G+1#10G+1#4G	A032B	4c #10wire 12c#4wire 1#10G+1#4G								
Total to CPL-A in A012 12c #10 wire+10c # 8wire ** 2c #10G + 2c #8G		Total to CPL-B in A012A 12c # 10 wire ** 2c #10G		Total to CPL-C in A014C 4c #8wire 2#8G		Total to EPL-A in A013 6c # 10 wire ** 1c #10G		Total to EPL-B in A013A 8c #12 wire+8c # 10wire+12c#4wire ** 2c #12G + 2c #10+2c#4G		Total to EPL-C in A013D 10c #10wire+24c#4wire ** 2c #10G +2c#4G		Total to LCP in A012C 31c # 10wire ** 3c #10G		Total to LCP in A013C 18c #10 wire + 18c #8wire ** 4c #10G + 2c #8G		Total to LCP-1 in A014B 6c # 10wire ** 2c #10G		Total to LCP-1 in A015B 3c #8wire 6c#10wire 2c#10G+1#8G	

SRJV
FEB 07 2014
ISSUED FOR CONSTRUCTION

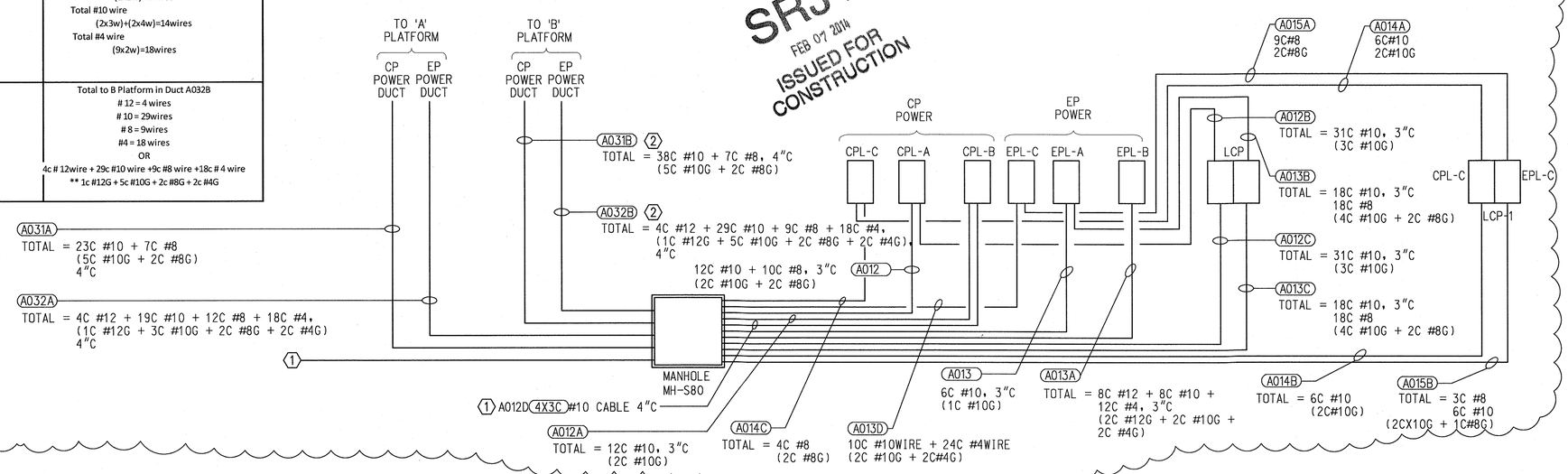

NOTE:

FOR COMMUNICATIONS COORDINATION REFERENCE
NOTE 33 OF GENERAL NOTES ON DRAWING E-C-001.

GENERAL NOTES

1 GUIDEWAY CAMERAS

THE PREPARATION OF THIS DRAWING HAS BEEN FINANCED BY THE TAXES OF THE CITIZENS OF LOS ANGELES COUNTY AND OF THE STATE OF CALIFORNIA.

REV	DATE	BY	APP	REG NO	EXPIRES	SEAL HOLDER	DESCRIPTION
1	1/14/14	AN	FSW	E11465	12/31/15	F. WALIEDDINE	ECI 79
0	6/5/13	AN	FSW	E11465	12/31/13	F. WALIEDDINE	APPROVED FOR CONSTRUCTION

DESIGNED BY A. NALBANDIAN
DRAWN BY H. HERNANDEZ
CHECKED BY F. WALIEDDINE
IN CHARGE F. WALIEDDINE
DATE 6/5/13

REGISTERED PROFESSIONAL ENGINEER
FADI S. WALIEDDINE
No. E11465
Exp. 12-31-15
ELECTRICAL
STATE OF CALIFORNIA

Exposition Metro Line Construction Authority
Expo

EXPO SKANSKA RADOS

444 South Flower Street
Suite 2200
Los Angeles, CA 90071
TEL (213) 443-7463
FAX (213) 362-9481

PARSONS BRINCKERHOFF

CURRENT STATUS

Exposition Construction Authority
Approved for Construction
Drawings - AFC
FEB 06 2014

EXPOSITION LRT PROJECT- PHASE 2
COLORADO/4TH STREET STATION
EMBEDDED CONDUITS & DUCTS
CONDUIT SIZE AND WIRE FILL CALCULATIONS

CONTRACT NO XP8902-002
DRAWING NO E-S7-014
REV 1
SCALE NONE
SHEET NO

14-Jan-14 4:46 PM Hernandez, Hector L.

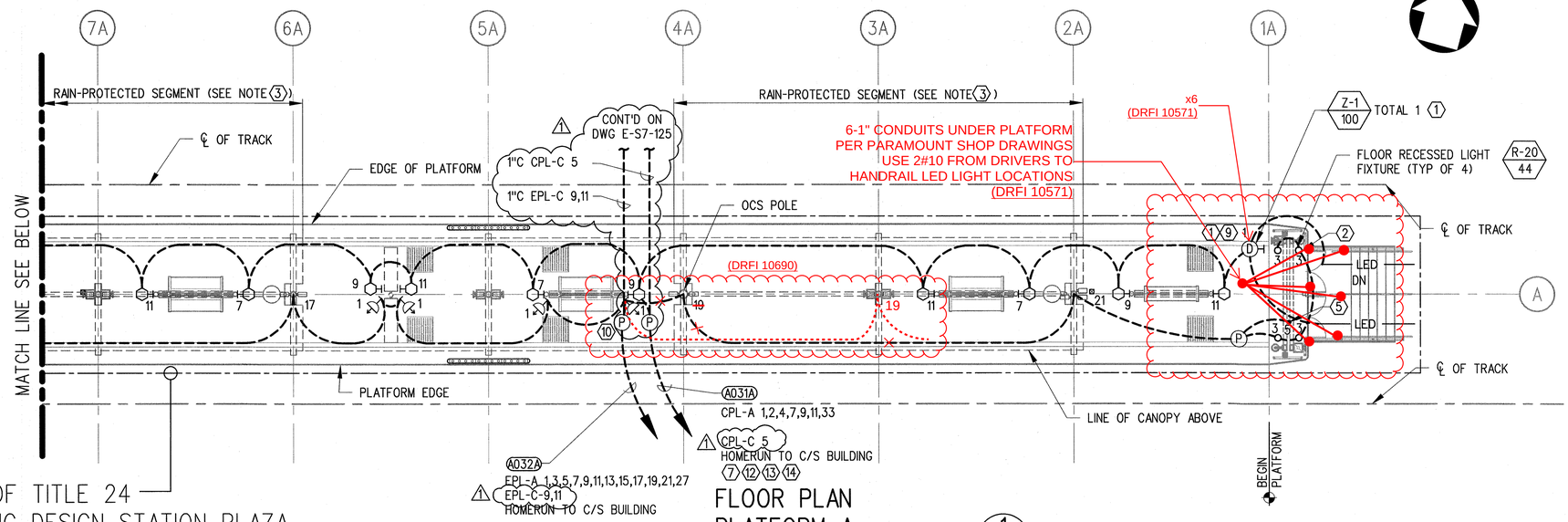

LIMIT OF TITLE 24
LIGHTING DESIGN STATION PLAZA
AREA=5306 SQ. FT.
PERIMETER=622 L.F.

FLOOR PLAN PLATFORM A

1/8"=1'-0"

1 / E-S7-111

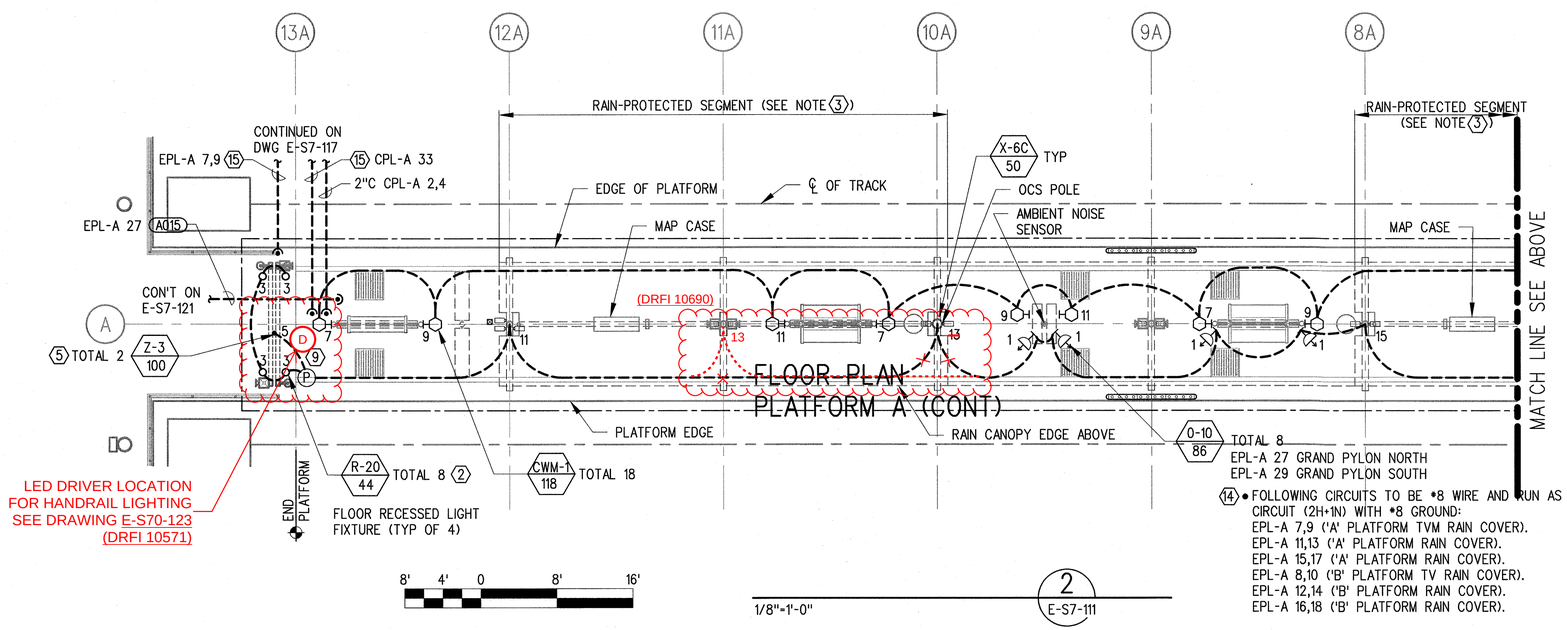

1/8"=1'-0"

2 / E-S7-111

NOTES:

1. LIGHTING FIXTURE SCHEDULE IS SHOWN ON DWG E-C-002.
2. USE OF RELAY CONTROL FOR STATION LIGHTING AND EMERGENCY LIGHTING IS A REQUIREMENT OF THE CONTRACT. REFER TO PANEL SCHEDULE ASSIGNMENTS.
3. NOT USED.
4. CONTRACTOR SHALL PROVIDE INSTALLATION DRAWINGS FOR ALL CONDUIT RUNS TO EOR "FOR INFORMATION ONLY" BEFORE THEY PROCEED WITH INSTALLATION.
5. CONDUIT AND PULLBOX LOCATIONS AS SHOWN ARE DIAGRAMATIC ONLY ACTUAL LOCATIONS AND ROUTINGS TO BE DETERMINED IN THE FIELD BY CONTRACTOR.
6. NOT USED.
7. FOR COMMUNICATIONS COORDINATION REFERENCE, SEE NOTE 33 OF GENERAL NOTES ON DWG E-C-001.

KEYNOTES:

1. HANDRAIL LIGHT LED TRANSFORMERS LOCATED IN CRAWL SPACE UNDER PLATFORM. CONDUITS TO PASS THROUGH END OF PLATFORM BULKHEAD AND/OR SUPPORT WALL TO HANDRAILS AS NEEDED. TO USE STRANDED #14 WIRE FROM TRANSFORMER TO LED LIGHT.
2. UPLIGHTS TYPE R-20 USED FOR STATION ARCHWAYS.
3. SEE DWG E-C-013 FOR RAIN PROTECTION CANOPY LIGHTING.
4. NOT USED.
5. ARCHWAY LIGHTING TYPE Z-3 LED STRIP. SEE DWG A-A-625 FOR DETAILS.
6. NOT USED.
7. FOR DUCTBANK, SEE DWGS NX-3C-301 AND NX-3C-302.
8. NOT USED.
9. ROUTE IN RAMP LIGHTING AND LED POWER CONDUITS FROM GRID LINE 1 AND 13. PROVIDE PULL BOX OR WIREWAY AT APPROXIMATE LOCATION OF GRID LINE 1 AND 13. STUB-UP DUCTS IN PLATFORM CRAWLSPACE PER SECTION A-A ON DWG NX-208.
10. STUB-UP DUCTS IN PLATFORM. CRAWLSPACE PER SECTION A-A ON DWG NX-208.
11. NOT USED.
12. • ALL CIRCUIT WIRES TO BE #10 WIRE WITH #10 GROUND.
    FOLLOWING CIRCUITS TO BE RUN AS 3 PHASE, 4 WIRE CIRCUIT (3H+1N):
    CPL-A 7,9,11 ('A' PLATFORM CP LIGHTING).
    CPL-A 13,15,17 ('B' PLATFORM CP LIGHTING).
    EPL-A 1,3,5 ('A' PLATFORM EP LIGHTING).
    EPL-A 2,4,6 ('B' PLATFORM EP LIGHTING).
    CPL-A 8,10,12 ('B' PLATFORM RAMP).
    CPL-A 21,23,25 (STAIRS).
    CPL-A 27,29,31 (LAMPOSTS).
    FOLLOWING CIRCUITS TO BE RUN AS 2 PHASE, 3 WIRE CIRCUIT (2H+1N):
    EPL-A 19,21 ('A' PLATFORM RAIN COVERS).
    EPL-A 20,22 ('B' PLATFORM RAIN COVERS).
    CPL-A 24 ('A' PLATFORM RAMP).
    ~~EPL-C 1,3 ('B' PLATFORM)~~
    EPL-C 9,11 ('A' PLATFORM)
    EPL-C 5,7 ('A' PLATFORM)
13. • FOLLOWING CIRCUITS TO USE #10 WIRE AND RUN AS 1 PHASE CIRCUIT:
    CPL-A 1 ('A' PLATFORM EXIT HANDRAIL).
    CPL-A 19 ('B' PLATFORM EXIT HANDRAIL).
    CPL-A 33 ('A' PLATFORM TICKET BOOTH CP LIGHTING).
    CPL-A 35 ('B' PLATFORM TICKET BOOTH CP LIGHTING).
    EPL-A 27 GRAND PYLON NORTH.
    CPL-C 5 ('A' PLATFORM TVM #3)
    EPL-C 7 ('B' PLATFORM)
    ~~EPL-A 29 GRAND PYLON SOUTH.~~
    CPL-C 1,3,11 ('B' PLATFORM)
    ~~CPL-C 5,7 ('A' PLATFORM)~~
    ~~COVER).~~
14. • FOLLOWING CIRCUITS TO BE #8 WIRE AND RUN AS 2 PHASE, 3 WIRE CIRCUIT (2H+1N) WITH #8 GROUND:
    EPL-A 7,9 ('A' PLATFORM TVM RAIN COVER).
    EPL-A 11,13 ('A' PLATFORM RAIN COVER).
    EPL-A 15,17 ('A' PLATFORM RAIN COVER).
    EPL-A 8,10 ('B' PLATFORM TV RAIN COVER).
    EPL-A 12,14 ('B' PLATFORM RAIN COVER).
    EPL-A 16,18 ('B' PLATFORM RAIN COVER).
15. • CONDUITS TO BE BURIED NO CLOSER THAT 42" FROM TOP OF RAIL.

SRJV
FEB 07 2014
ISSUED FOR CONSTRUCTION

THE PREPARATION OF THIS DRAWING HAS BEEN FINANCED BY THE TAXES OF THE CITIZENS OF LOS ANGELES COUNTY AND OF THE STATE OF CALIFORNIA.

REV	DATE	BY	APP	REG NO	EXPIRES	SEAL HOLDER	DESCRIPTION
1	1/14/14	AN	FSW	E11465	12/31/15	F. WALIEDDINE	ECI 79
0	6/5/13	AN	FSW	E11465	12/31/13	F. WALIEDDINE	APPROVED FOR CONSTRUCTION

DESIGNED BY A. NALBANDIAN
DRAWN BY H. HERNANDEZ
CHECKED BY F. WALIEDDINE
IN CHARGE F. WALIEDDINE
DATE 6/5/13

REGISTERED PROFESSIONAL ENGINEER — FADI S. WALIEDDINE No. E11465 Exp. 12-31-15 ELECTRICAL — STATE OF CALIFORNIA

Exposition Metro Line Construction Authority
Expo
EXPO SKANSKA RADOS
444 South Flower Street
Suite 2200
Los Angeles, CA 90071
TEL (213) 443-7463
FAX (213) 362-9481
PARSONS BRINCKERHOFF
CURRENT STATUS

EXPOSITION LRT PROJECT- PHASE 2
COLORADO/4TH STREET STATION
PLATFORM A
LIGHTING PLAN

Exposition Construction Authority Approved for Construction Drawings - AFC
FEB 06 2014

CONTRACT NO XP8902-002
DRAWING NO E-S7-111
REV 1
SCALE 1/8" = 1'-0"
SHEET NO

C:\projectwise\pb\projectwise\thernandezh\dms09028\exp02-E-S7-111.dwg
14-Jan-14 4:48 PM
Hernandez, Hector L.

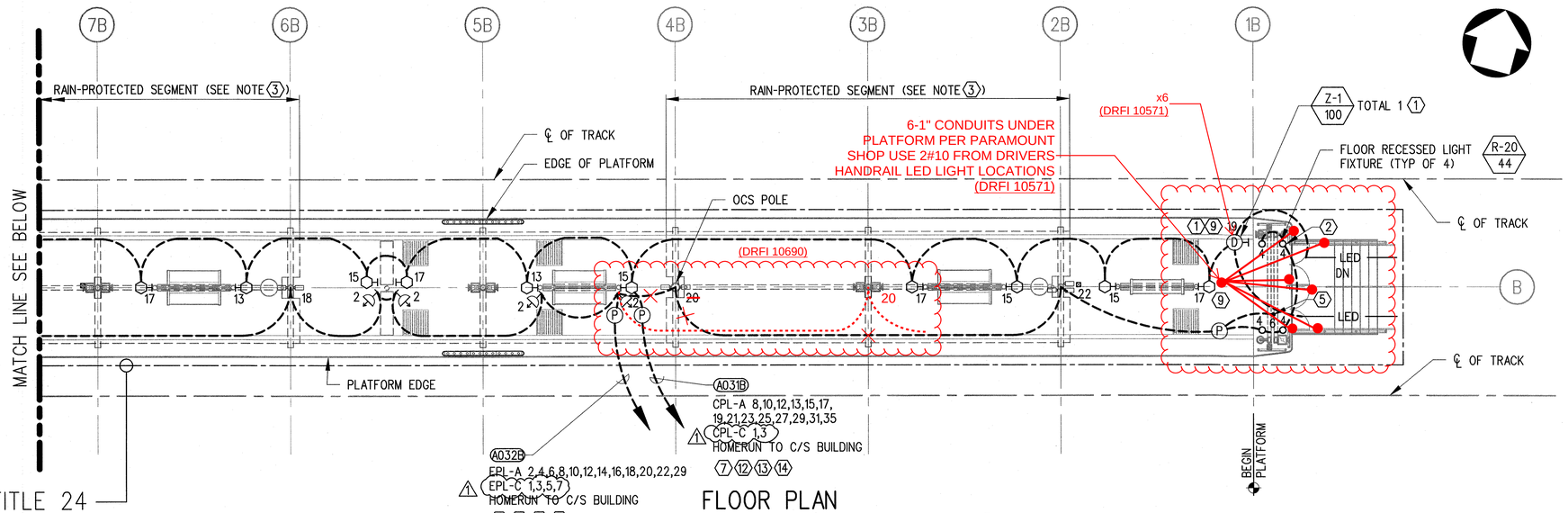

LIMIT OF TITLE 24
LIGHTING DESIGN STATION PLAZA
AREA=5333 SQ. FT.
PERIMETER=623 L.F.

FLOOR PLAN
PLATFORM B

1/8"=1'-0"

1
E-S7-112

NOTE:

1. FOR NOTES AND KEYNOTES SEE E-S7-111.

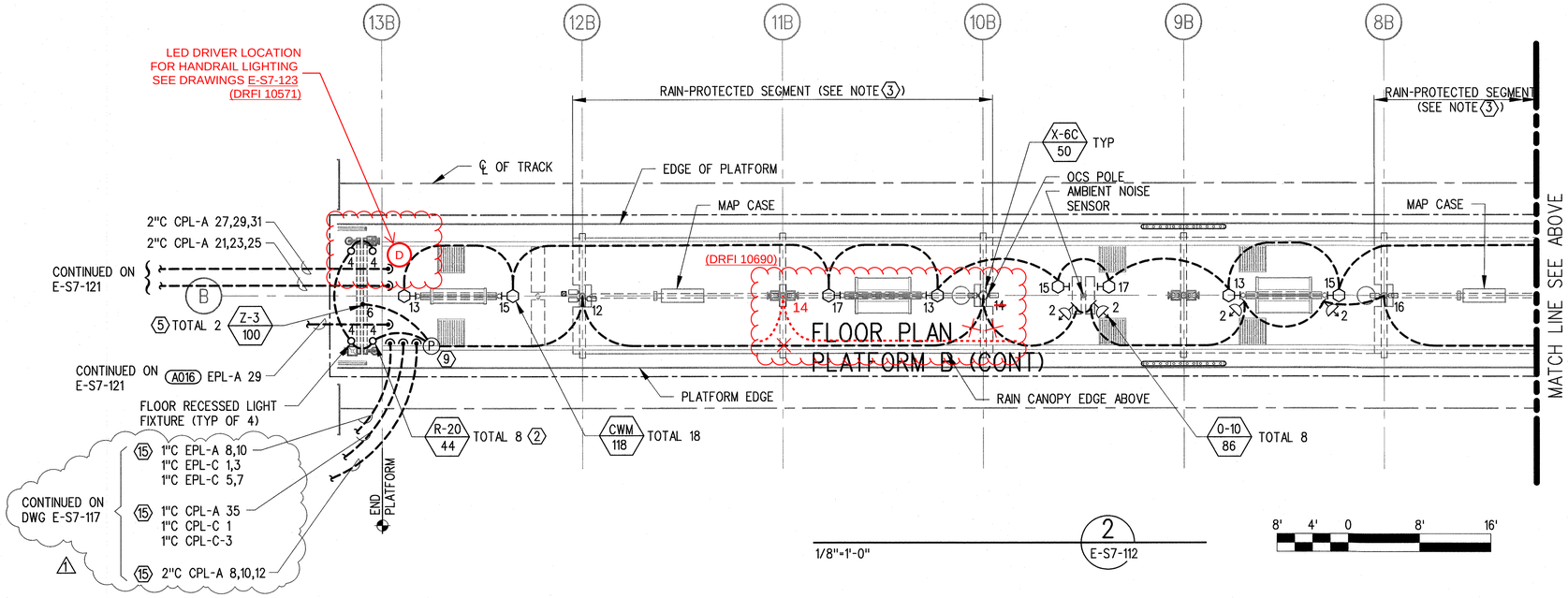

1/8"=1'-0"

2
E-S7-112

8' 4' 0 8' 16'

SRJV
FEB 07 2014
ISSUED FOR CONSTRUCTION

THE PREPARATION OF THIS DRAWING HAS BEEN FINANCED BY THE TAXES OF THE CITIZENS OF LOS ANGELES COUNTY AND OF THE STATE OF CALIFORNIA.

REV	DATE	BY	APP	REG NO	EXPIRES	SEAL HOLDER	DESCRIPTION
1	1/14/14	AN	FSW	E11465	12/31/15	F. WALIEDDINE	ECI 79
0	6/5/13	AN	FSW	E11465	12/31/13	F. WALIEDDINE	APPROVED FOR CONSTRUCTION

DESIGNED BY A. NALBANDIAN
DRAWN BY H. HERNANDEZ
CHECKED BY F. WALIEDDINE
IN CHARGE F. WALIEDDINE
DATE 6/5/13

REGISTERED PROFESSIONAL ENGINEER
FADI S. WALIEDDINE
No. E11465
Exp. 12-31-15
ELECTRICAL
STATE OF CALIFORNIA

Exposition Metro Line Construction Authority
Expo

EXPO SKANSKA RADOS

444 South Flower Street
Suite 2200
Los Angeles, CA 90071
TEL (213) 443-7463
FAX (213) 362-9481

PARSONS BRINCKERHOFF

CURRENT STATUS

EXPOSITION LRT PROJECT- PHASE 2
COLORADO/4TH STREET STATION
PLATFORM B
LIGHTING PLAN

Exposition Construction Authority
Approved for Construction Drawings - AFC
FEB 06 2014

CONTRACT NO XP8902-002
DRAWING NO E-S7-112
REV 1
SCALE 1/8" = 1'-0"
SHEET NO

C:\projectwise\pb\projectwise\thernandezh\dms09028\exp02-E-S7-112.dwg
14-Jan-14
4:49 PM
Hernandez, Hector L.

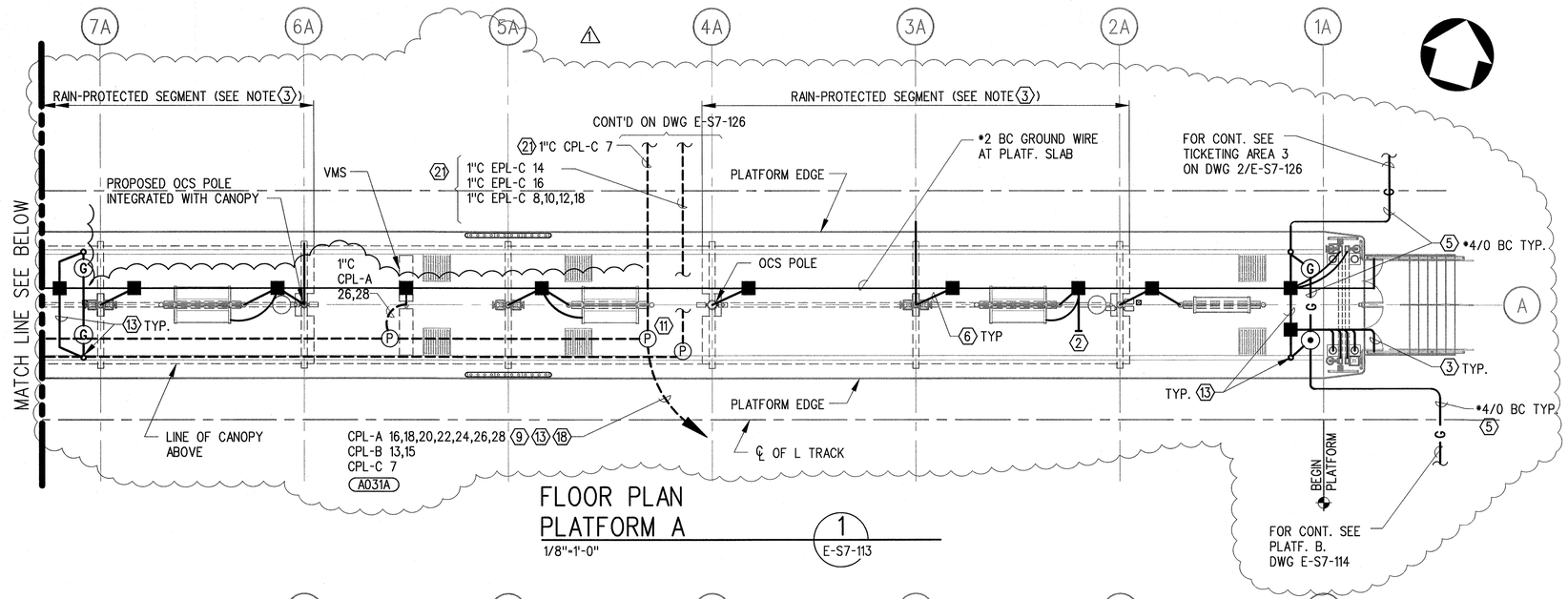

FLOOR PLAN
PLATFORM A

1/8"=1'-0"

1
E-S7-113

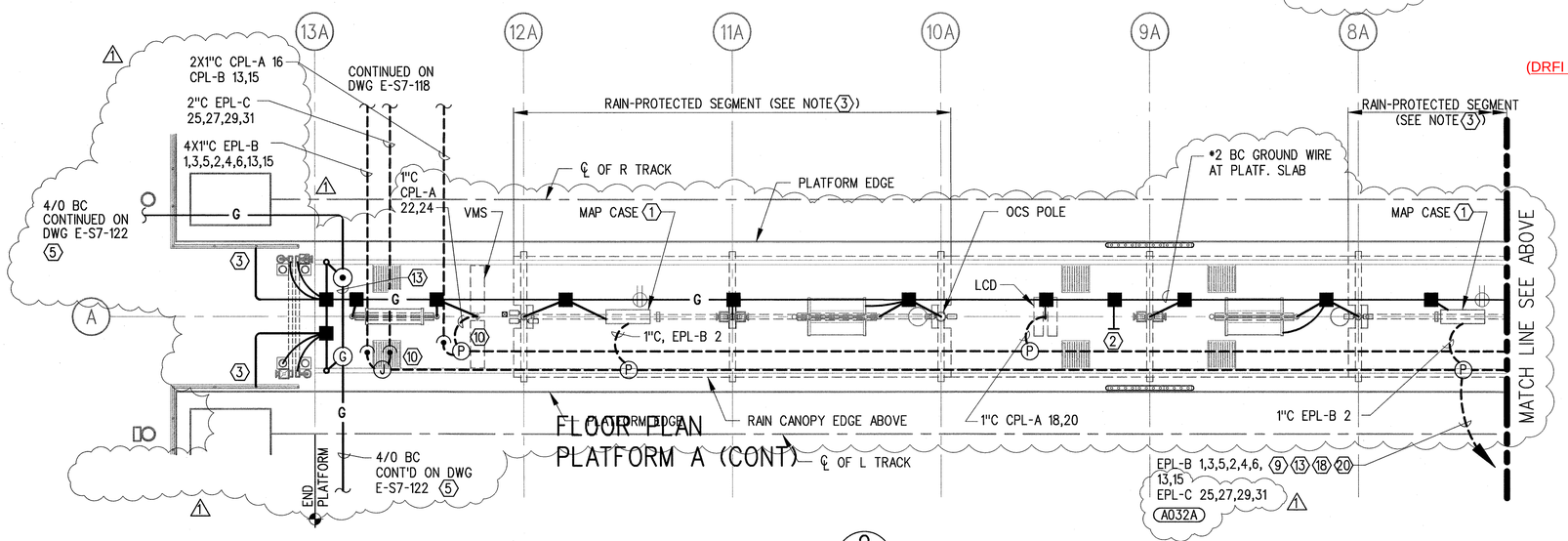

FLOOR PLAN
PLATFORM A (CONT)

1/8"=1'-0"

2
E-S7-113

8' 4' 0 8' 16'

NOTES:

1. GROUND ALL METALLIC ARCH STRUCTURE PROJECTING ABOVE PLATFORM, TVM, SAV, MAP CASES, HANDRAILS WITH #6 BARE COPPER GROUND CONDUCTOR EXOTHERMIC WELD TO GROUND GRID SYSTEM PER CPUC G0-143B.10.09.
2. EXOTHERMIC WELD SHALL BE USED FOR BURIED AND EMBEDDED GROUND CONNECTIONS. CLEAN AND COAT WITH TAR MASTIC BEFORE BACKFILLING. COMPRESSION TYPE LUGS OR MECHANICAL BOLTED CONNECTORS SHALL BE USED FOR ABOVE GROUND CONNECTIONS.
3. USE CONTINUOUS GROUND CONDUCTOR WITHOUT SPLICES.
4. ALL GROUNDING, AND BONDING OF NON-CONDUCTING EXPOSED METAL PARTS OF RACEWAY SYSTEMS TO BE PER NEC ARTICLE 250.
5. NOT USED.
6. CONTRACTOR SHALL PROVIDE INSTALLATION DRAWINGS FOR ALL CONDUIT RUNS TO EOR FOR 'INFORMATION ONLY' BEFORE THEY PROCEED WITH INSTALLATION.
7. CONDUIT AND PULLBOX LOCATIONS AS SHOWN ARE DIAGRAMATIC ONLY ACTUAL LOCATIONS AND ROUTINGS SHALL BE SHOWN ON INSTALLATION DWG'S.
8. NOT USED.
9. THE TOTAL GROUND RESISTANCE OF THE GROUND GRID MEASURED SHALL NOT EXCEED 5 OHMS. TO INSTALL GROUND RODS AS NEEDED TO ACHIEVE 5 OHM RESISTANCE, TEST POINTS AS SHOWN TO REMAIN.
10. ALL EXTERIOR RECEPTACLES TO BE GFI (PER METRO DESIGN CRITERIA).
11. FOR COMMUNICATIONS COORDINATION, SEE NOTE 33 OF GENERAL NOTES ON DRAWING E-C-001.

(DRFI 10973)

12. INSTALL AN ADDITIONAL #6 BARE COPPER GROUND WIRE FROM THE BUILDING/WATER PIPING TO THE STATION DROUND GRID SYSTEM.

13. #6 AWG CABLE FROM PIGTAILS TO STEEL POSTS MAY BE INSTALLED IN PLATFORM GROUT.

(DRFI 11022)

KEYNOTES:

1. MAP CASE CABINETS TO COME WITH INTEGRAL MAINTENANCE RECEPTACLE. CONNECT TO MAP CASE LIGHTING CIRCUIT. REFER TO ARCHITECTURAL DETAILS.

(DRFI 11009)

2. BOND GROUND CABLE TO LATERAL REBAR AT 4'-0" INTERVALS AROUND THE PERIMETER AS SHOWN AND 2'-0" BELOW GRADE TO GROUND GRID VIA •6 WIRE.
THIS NOTE APPLIES TO E-S4-113 & E-S4-114 ONLY
3. GROUND HANDRAIL TO GROUND GRID VIA •6 WIRE FOR EVERY SECTION (SEPARATED BY EXPANSION JOINTS).
4. GROUND WIRE SHALL BE BONDED FROM SAV, TVM, AND FARE GATE POSITIONS EQUIPMENT TO GROUNDING GRID VIA •6 WIRE. TO LEAVE 6'-0" POWER AND GROUND CABLE PIGTAIL AT EQUIPMENT FOR FUTURE CONNECTION OF EQUIPMENT. TO BE SECURED SO AS NOT TO PRESENT TRIP HAZARD.
5. GROUND GRID CONDUIT SIZE AND CONNECTIONS PER DWG E-C-004, DETAIL E. BURIED 2' MIN BELOW GRADE.
6. GROUND OTHER METALLIC FRAMES TO •2 BC GROUNDING WIRE AT PLATFORM VIA •6 WIRE U.N.O.
7. NOT USED.
8. NOT USED
9. SEE DWG E-S7-122 AND DUCTBANK DWGS NX-3C-301 AND NX-3C-302.
10. ROUTE POWER CONDUITS FROM GRID LINE 1 AND 13. PROVIDE WIREWAY OR PULLBOX AT APPROXIMATE LOCATION OF GRID LINE 1 AND 13. STUB-UP DUCTS IN PLATFORM CRAWLSPACE PER SECTION A-A ON DWG NX-208.
11. STUB-UP DUCTS IN PLATFORM CRAWLSPACE PER SECTION A-A ON DWG NX-208.
12. NOT USED.
13. •4/0 BC GROUND RISER WIRE UP TO PLATFORM SLAB.

13. ALL CIRCUIT WIRES TO BE •10 WIRE WITH •10 GROUND.

- FOLLOWING CIRCUITS TO USE •10 WIRE AND RUN AS 3 PHASE, 4 WIRE CIRCUIT (3H+1N):
  EPL-B 2,4,6 ('A' PLATFORM MAPCASES).
  EPL-B 8,10,12 ('B' PLATFORM MAPCASES).
- FOLLOWING CIRCUITS TO USE •10 WIRE AND RUN AS 2 PHASE, 3 WIRE CIRCUIT (2H+1N):
  EPL-A 26,28 (TOS BOOTH HVAC).
  EPL-A 30,32 (TOS BOOTH RECEPTACLES).
  CPL-A 22,24 ('A' PLATFORM VMS SIGN 1 & 2).
  CPL-A 26,28 ('A' PLATFORM VMS SIGN 3 & 4).
  CPL-A 36,38 ('B' PLATFORM VMS SIGN 1, & 2).
  CPL-A 40,42 ('B' PLATFORM VMS SIGN 3 & 4).
- FOLLOWING CIRCUITS TO USE •10 WIRE AND RUN AS 1 PHASE CIRCUIT WITH DEDICATED NEUTRAL:
  CPL-B 1,39 (TOS BOOTH).
  CPL-B 13,15 ('A' PLATFORM VSS & PA/VMS BOX).
  CPL-B 25,27 ('B' PLATFORM VSS & PA/VMS BOX).

14. • FOLLOWING CIRCUITS TO USE •8 WIRE AND RUN AS 1 PHASE CIRCUIT WITH DEDICATED NEUTRAL AND •8 GROUND:
  CPL-A 16 ('A' PLATFORM TVM, LCD).
  CPL-A 30 ('B' PLATFORM TVM, LCD).
  CPL-C 7 ('A' PLATFORM TVM•3 LCD)
  CPL-C 11 ('B' PLATFORM MAPCASE LCD

15. • FOLLOWING CIRCUITS TO USE •12 WIRE AND RUN AS 1 PHASE CIRCUIT WITH DEDICATED NEUTRAL WITH •12 GROUND:
  EPL-B 13,15 (TO GTELS), TVM•1
  EPL-B 35,37 (GTELS) PLATF. B FAIR GATES

16. • FOLLOWING CIRCUITS TO USE •4 WIRE AND RUN AS 1 PHASE CIRCUIT WITH DEDICATED NEUTRAL WITH •4 GROUND:
  EPL-B 1,3,5,29,31,33 (TVM TICKETING AREA 1&2).
  EPL-C 25,27,29,31 (FARE GATE) TICKETING AREA 1
  EPL-C 12,14,16 TICKETING AREA 3

17. • FOLLOWING CIRCUITS TO USE •8 WIRE AND RUN AS 2 PHASE, 3 WIRE CIRCUIT WITH •8 GROUND:
  CPL-A 18,20 ('A' PLATFORM LCD).
  CPL-A 32,34 ('B' PLATFORM LCD).

18. CONTINUED ON DWG E-S7-170.
19. GROUND EXTERIOR FENCE VIA •6 WIRE FOR EVERY SECTION SEPARATED BY EXPANSION JOINT.
20. RUN BOUNDING JUMPER BETWEEN C/S BUILDING AND PLATFORM A AND B GROUNDING NETWORKS.
21. CONDUITS TO BE BURIED NO CLOSER THAN 42" FROM TOP OF RAIL.

SRJV
FEB 07 2014
ISSUED FOR CONSTRUCTION

THE PREPARATION OF THIS DRAWING HAS BEEN FINANCED BY THE TAXES OF THE CITIZENS OF LOS ANGELES COUNTY AND OF THE STATE OF CALIFORNIA.

REV	DATE	BY	APP	REG NO	EXPIRES	SEAL HOLDER	DESCRIPTION
1	1/14/14	AN	FSW	E11465	12/31/15	F. WALIEDDINE	ECI 79
0	6/5/13	AN	FSW	E11465	12/31/13	F. WALIEDDINE	APPROVED FOR CONSTRUCTION

DESIGNED BY A. NALBANDIAN
DRAWN BY H. HERNANDEZ
CHECKED BY F. WALIEDDINE
IN CHARGE F. WALIEDDINE
DATE 6/5/13

REGISTERED PROFESSIONAL ENGINEER
FADI S. WALIEDDINE
No. E11465
Exp. 12-31-15
ELECTRICAL
STATE OF CALIFORNIA

Exposition Metro Line Construction Authority
Expo

EXPO SKANSKA RADOS

444 South Flower Street
Suite 2200
Los Angeles, CA 90071
TEL (213) 443-7463
FAX (213) 362-9481

PARSONS BRINCKERHOFF

CURRENT STATUS

Exposition Construction Authority
Approved for Construction
Drawings - AFC
FEB 06 2014

EXPOSITION LRT PROJECT- PHASE 2
COLORADO/4TH STREET STATION
PLATFORM A
GROUNDING & POWER PLAN

CONTRACT NO XP8902-002
DRAWING NO E-S7-113
REV 1
SCALE 1/8" = 1'-0"
SHEET NO

C:\projectwise\pb\projectwisenl\hernandezh\dms09028\expo2-E-S7-113.dwg
14-Jan-14 4:50 PM Hernandez, Hector L.

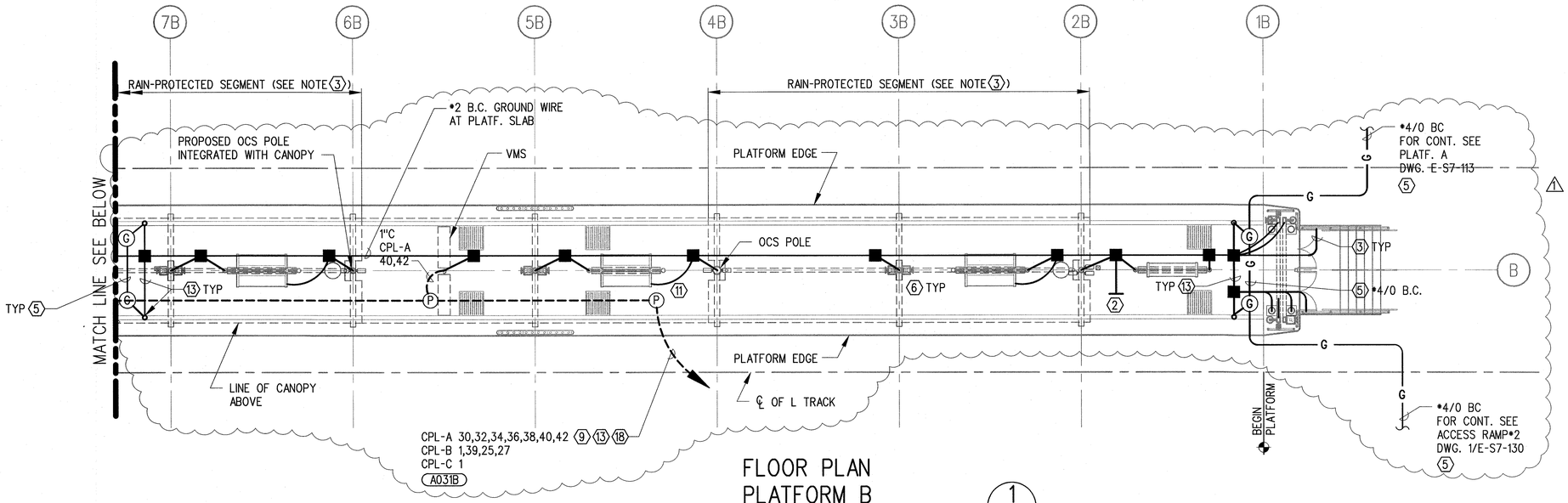

FLOOR PLAN
PLATFORM B

1/8"=1'-0"

1 / E-S7-114

NOTE:

1. FOR NOTES AND KEYNOTES SEE E-S7-113.
2. #6 AWG CABLE FROM PIGTAILS TO STEEL POSTS MAY BE INSTALLED IN PLATFORM GROUT. (DRFI 11022)

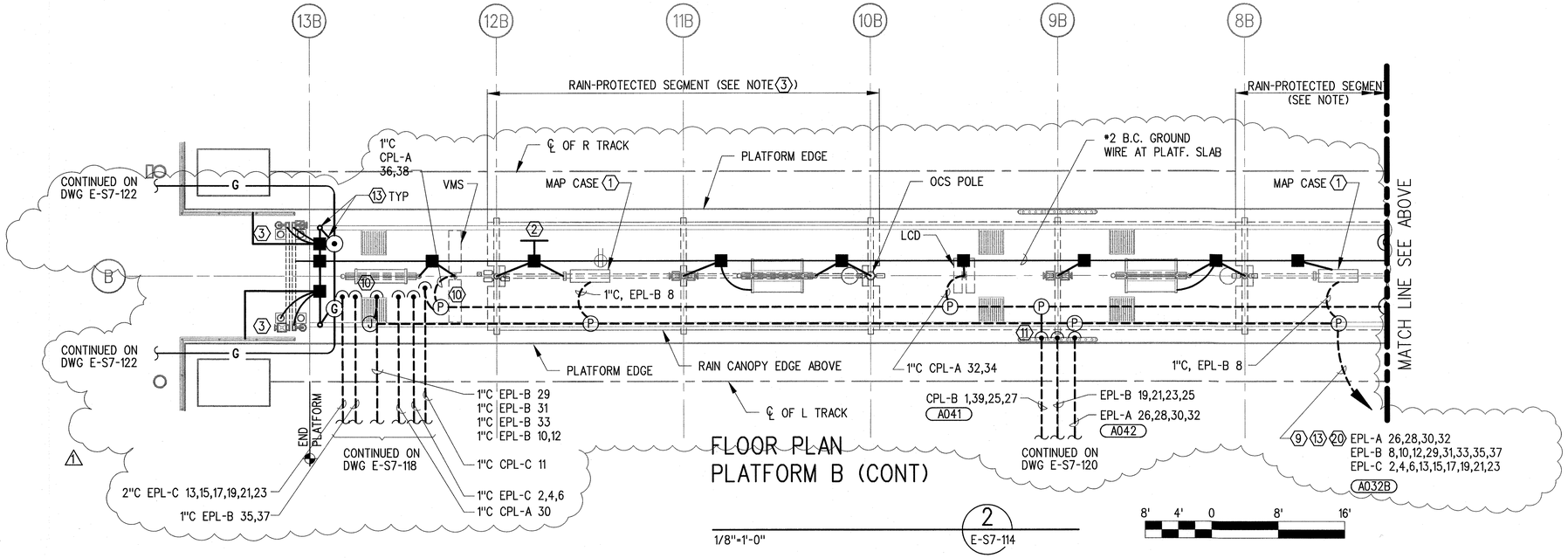

FLOOR PLAN
PLATFORM B (CONT)

1/8"=1'-0"

2 / E-S7-114

SRJV
FEB 07 2014
ISSUED FOR CONSTRUCTION

THE PREPARATION OF THIS DRAWING HAS BEEN FINANCED BY THE TAXES OF THE CITIZENS OF LOS ANGELES COUNTY AND OF THE STATE OF CALIFORNIA.

REV	DATE	BY	APP	REG NO	EXPIRES	SEAL HOLDER	DESCRIPTION
1	1/14/14	AN	FSW	E11465	12/31/15	F. WALIEDDINE	ECI 79
0	6/5/13	AN	FSW	E11465	12/31/13	F. WALIEDDINE	APPROVED FOR CONSTRUCTION

DESIGNED BY A. NALBANDIAN
DRAWN BY H. HERNANDEZ
CHECKED BY F. WALIEDDINE
IN CHARGE F. WALIEDDINE
DATE 6/5/13

REGISTERED PROFESSIONAL ENGINEER — FADI S. WALIEDDINE — No. E11465 — Exp. 12-31-15 — ELECTRICAL — STATE OF CALIFORNIA

Exposition Metro Line Construction Authority
Expo

EXPO SKANSKA RADOS

444 South Flower Street
Suite 2200
Los Angeles, CA 90071
TEL (213) 443-7463
FAX (213) 362-9481

PARSONS BRINCKERHOFF

CURRENT STATUS

Exposition Construction Authority Approved for Construction Drawings - AFC
FEB 06 2014

EXPOSITION LRT PROJECT- PHASE 2
COLORADO/4TH STREET STATION
PLATFORM B
GROUNDING & POWER PLAN

CONTRACT NO XP8902-002
DRAWING NO E-S7-114
REV 1
SCALE 1/8" = 1'-0"
SHEET NO

C:\projectwise\pb\projectwise\int\hernandezh\dms09028\expo2-E-S7-114.dwg
14-Jan-14 4:51 PM Hernandez, Hector L.

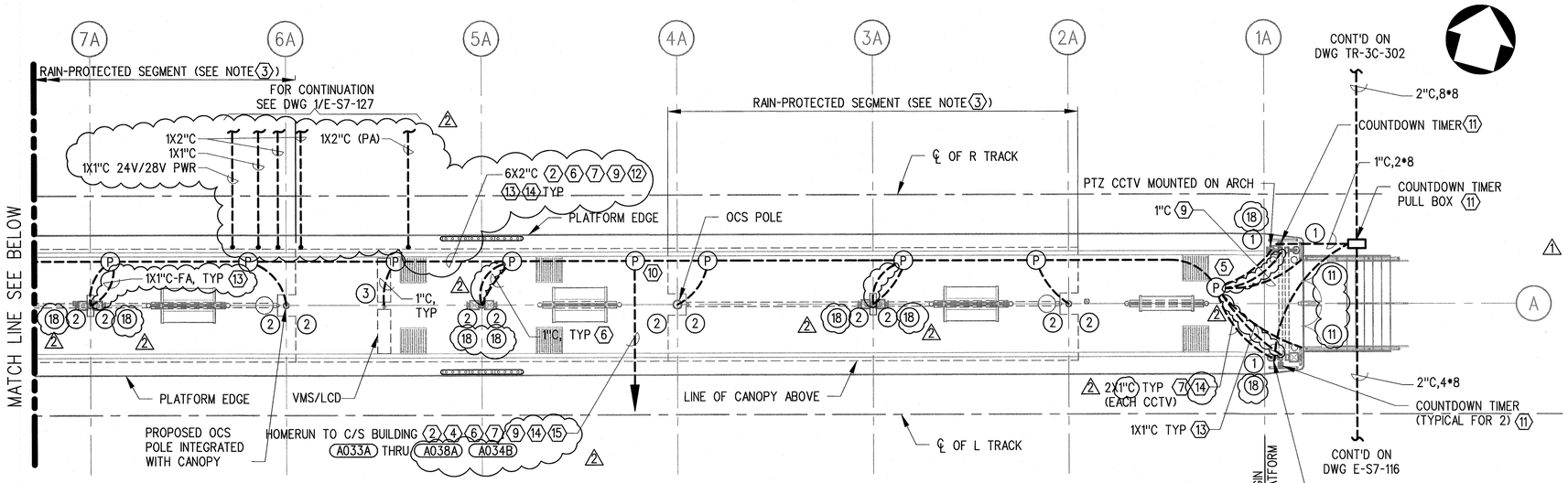

FLOOR PLAN
PLATFORM A

1/8"=1'-0"

1 / E-S7-115

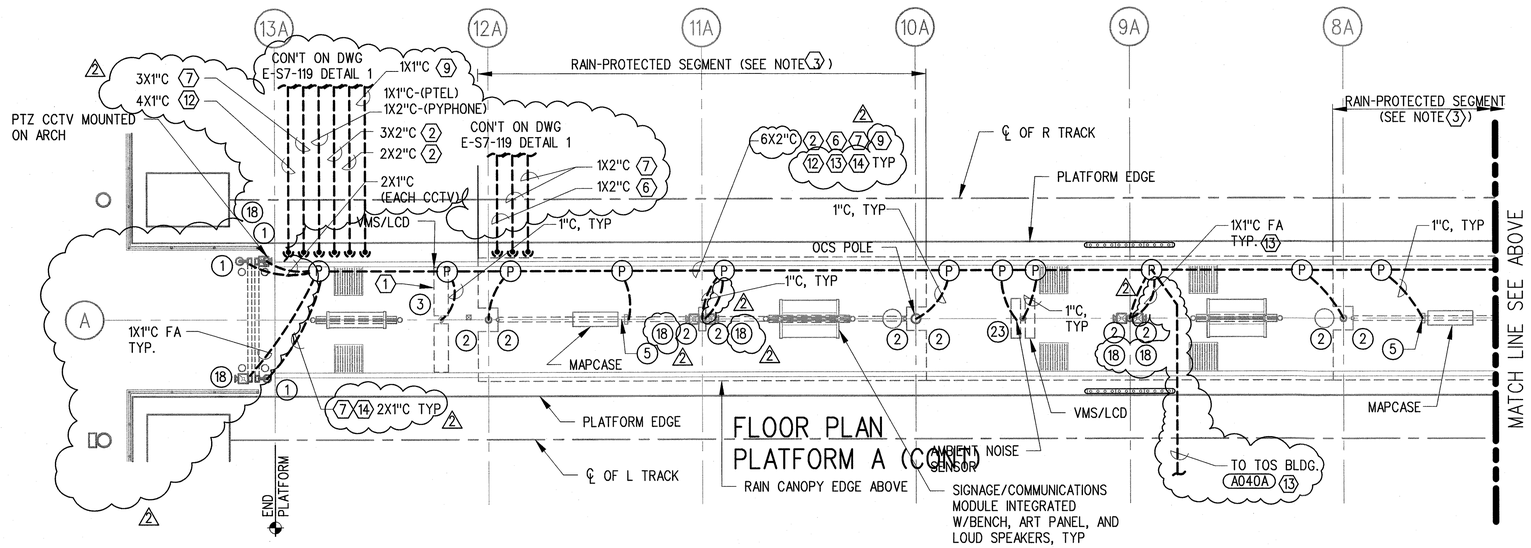

FLOOR PLAN
PLATFORM A (CONT)

1/8"=1'-0"

2 / E-S7-115

8' 4' 0 8' 16'

NOTES:

1. CONTRACTOR SHALL PROVIDE INSTALLATION DRAWINGS FOR ALL CONDUIT RUNS TO EOR 'FOR INFORMATION ONLY' BEFORE THEY PROCEED WITH INSTALLATION.
2. CONDUIT AND PULLBOX LOCATIONS AS SHOWN ARE DIAGRAMATIC ONLY ACTUAL LOCATIONS AND ROUTINGS TO BE SHOWN ON INSTALLATION DRAWINGS. 2
3. NOT USED.
4. FOR COMMUNICATIONS COORDINATION REFERENCE NOTE 33 OF GENERAL NOTES ON DRAWING E-C-001.

KEYNOTES:

1. REFER TO E-C-003 FOR DESCRIPTION OF EQUIPMENT.
2. DEDICATED CONDUIT FOR 'UFS' SYSTEM. NO OTHER COMMUNICATION SYSTEM TO USE CONDUIT. SPACE CONDUIT/ RACEWAY TO BE LEGIBLY MARKED "UFS WIREWAY SYSTEM CONDUIT ONLY".
3. CONDUIT STUB-UP. REF DWG E-C-004, DETAIL E.
4. SEE DWG E-S7-122 AND DUCTBANK DWGS NX-3C-301 AND NX-3C-302.
5. ROUTE IN RAMP COMMUNICATION CONDUITS FROM GRIDLINE 1 AND 13. PROVIDE WIREWAY OR PULLBOX AT APPROXIMATE LOCATION OF GRIDLINE 1 AND 13. STUB-UP DUCTS IN PLATFORM CRAWLSPACE PER SECTION A-A ON DWG NX-208.
6. DEDICATED CONDUIT FOR PA SYSTEMS. NO OTHER COMMUNICATION SYSTEM TO USE CONDUIT.
7. DEDICATED CONDUIT FOR CCTV AND VMS. NO OTHER COMMUNICATION SYSTEM TO USE CONDUIT.
8. FUTURE SAV STUB UP. INSTALL PLUG IN CONDUIT FLUSH WITH GRADE.
9. ACCESS GATES SECURITY SENSOR (IDS). 2
10. STUB-UP DUCTS IN PLATFORM CRAWLSPACE PER SECTION A-A ON DWG NX-208.
11. COUNTDOWN TIMER MOUNTED ON ARCHWAY COLUMN AT 7'-0" ABOVE TOP OF RAIL, 12" HOUSING COUNTDOWN TIMER WITH LED INDICATOR AND WATERPROOF SWITCH. FOR PULL BOX, CONDUIT INSTALLATION AND WIRING REFER TO TRAFFIC CONTROL DRAWING TR-3C-302 1
12. DEDICATED CONDUITS FOR GTEL PHONE ONLY.
13. DEDICATED CONDUIT FOR FIRE ALARM SYSTEM ONLY.
14. DEDICATED CONDUIT FOR CCTV 24/28V POWER.
15. IDS CONDUIT 037A SHALL RUN BETWEEN PLATFORM-A AND PLATFORM-B CRAWL SPACE PULL BOX AND THROUGH C/S BLDG.

2

SRJV
FEB 07 2014
ISSUED FOR CONSTRUCTION

THE PREPARATION OF THIS DRAWING HAS BEEN FINANCED BY THE TAXES OF THE CITIZENS OF LOS ANGELES COUNTY AND OF THE STATE OF CALIFORNIA.

REV	DATE	BY	APP	REG NO	EXPIRES	SEAL HOLDER	DESCRIPTION
2	1/14/14	AN	FSW	E11465	12/31/15	F. WALIEDDINE	ECI 79
1	11/05/13	AN	FSW	E11465	12/31/13	F. WALIEDDINE	ECI 51
0	5/30/13	AN	FSW	E11465	12/31/13	F. WALIEDDINE	APPROVED FOR CONSTRUCTION

DESIGNED BY A. NALBANDIAN
DRAWN BY H. HERNANDEZ
CHECKED BY F. WALIEDDINE
IN CHARGE F. WALIEDDINE
DATE 5/30/13

REGISTERED PROFESSIONAL ENGINEER
FADI S. WALIEDDINE
No. E11465
Exp. 12-31-15
ELECTRICAL
STATE OF CALIFORNIA

Exposition Metro Line Construction Authority
Expo

Exposition Construction Authority
Approved for Construction
Drawings - AFC
FEB 06 2014

EXPO SKANSKA RADOS

444 South Flower Street
Suite 2200
Los Angeles, CA 90071
TEL (213) 443-7463
FAX (213) 362-9481

PARSONS BRINCKERHOFF

CURRENT STATUS

EXPOSITION LRT PROJECT- PHASE 2
COLORADO/4TH STREET STATION
PLATFORM A
COMMUNICATION FIRE ALARM & UFS PLAN

CONTRACT NO XP8902-002
DRAWING NO E-S7-115
REV 2
SCALE 1/8" = 1'-0"
SHEET NO

C:\projectwise\pb\projectwise\hernandezh\dms\90028\expo2-E-S7-115.dwg
14-Jan-14
4:56 PM
Hernandez, Hector L.

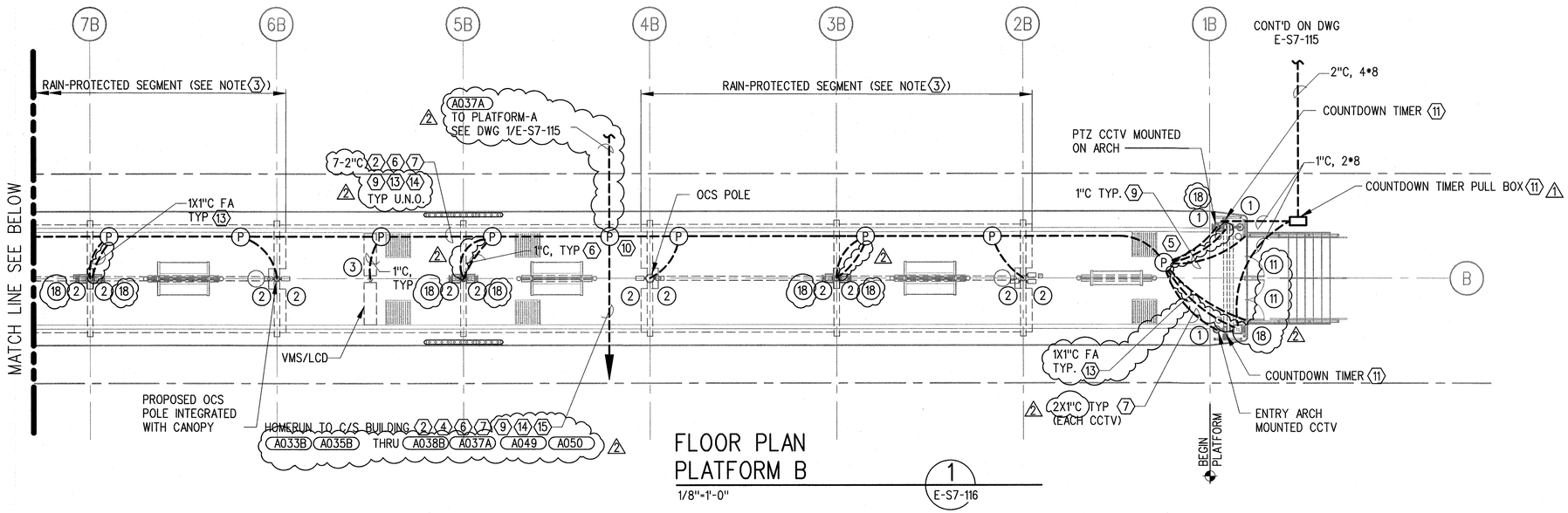

FLOOR PLAN
PLATFORM B

1/8"=1'-0"

1
E-S7-116

NOTE:

1. FOR NOTES AND KEYNOTES SEE E-S7-115.

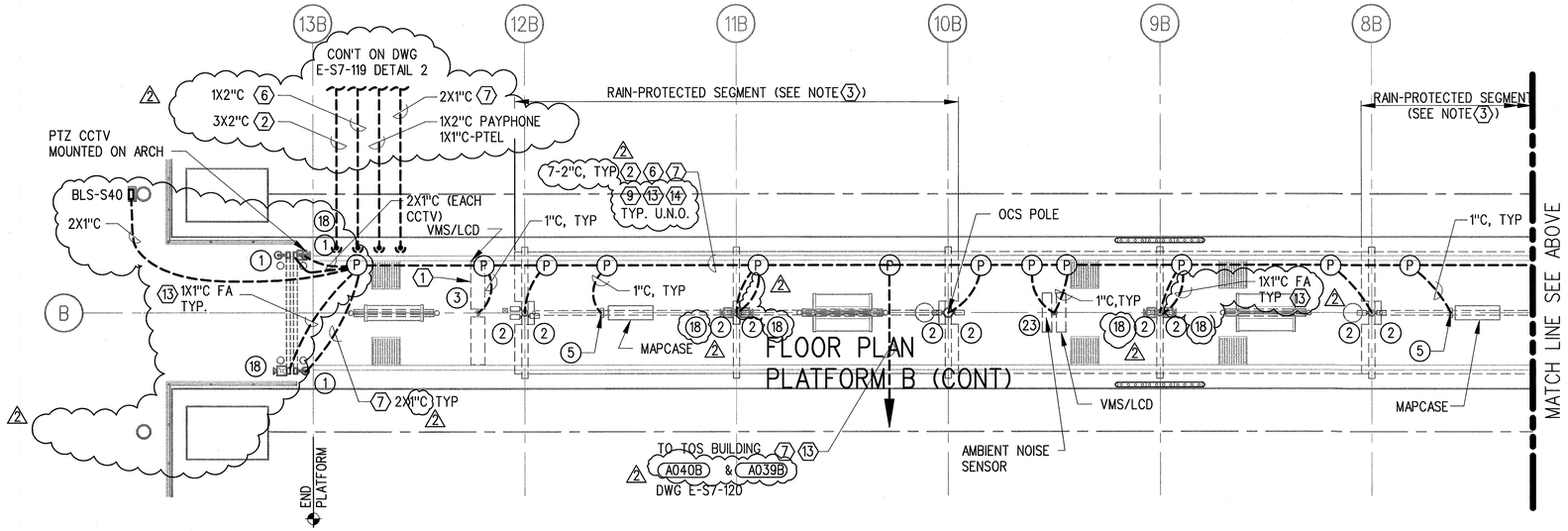

FLOOR PLAN
PLATFORM B (CONT)

8' 4' 0 8' 16'

1/8"=1'-0"

2
E-S7-116

SRJV
FEB 07 2014
ISSUED FOR
CONSTRUCTION

THE PREPARATION OF THIS DRAWING HAS BEEN FINANCED BY THE TAXES OF THE CITIZENS OF LOS ANGELES COUNTY AND OF THE STATE OF CALIFORNIA.

REV	DATE	BY	APP	REG NO	EXPIRES	SEAL HOLDER	DESCRIPTION
2	1/14/14	AN	FSW	E11465	12/31/15	F. WALIEDDINE	ECI 79
1	11/05/13	AN	FSW	E11465	12/31/13	F. WALIEDDINE	ECI 51
0	5/30/13	AN	FSW	E11465	12/31/13	F. WALIEDDINE	APPROVED FOR CONSTRUCTION

DESIGNED BY A. NALBANDIAN
DRAWN BY H. HERNANDEZ
CHECKED BY F. WALIEDDINE
IN CHARGE F. WALIEDDINE
DATE 5/30/13

REGISTERED PROFESSIONAL ENGINEER
FADI S. WALIEDDINE
No. E11465
Exp. 12-31-15
ELECTRICAL
STATE OF CALIFORNIA

Exposition Metro Line Construction Authority
Expo

Exposition Construction Authority
Approved for Construction
Drawings - AFC

EXPO SKANSKA RADOS

444 South Flower Street
Suite 2200
Los Angeles, CA 90071
TEL (213) 443-7463
FAX (213) 362-9481

PARSONS BRINCKERHOFF

FEB 06 2014

CURRENT STATUS

EXPOSITION LRT PROJECT- PHASE 2
COLORADO/4TH STREET STATION
PLATFORM B
COMMUNICATION FIRE ALARM & UFS PLAN

CONTRACT NO XP8902-002
DRAWING NO E-S7-116
REV 2
SCALE 1/8" = 1'-0"
SHEET NO

C:\projectwise\pb\projectwise\thermandez\hdms09028\exp02-E-S7-116.dwg
14-Jan-14 4:56 PM Hernandez, Hector L.

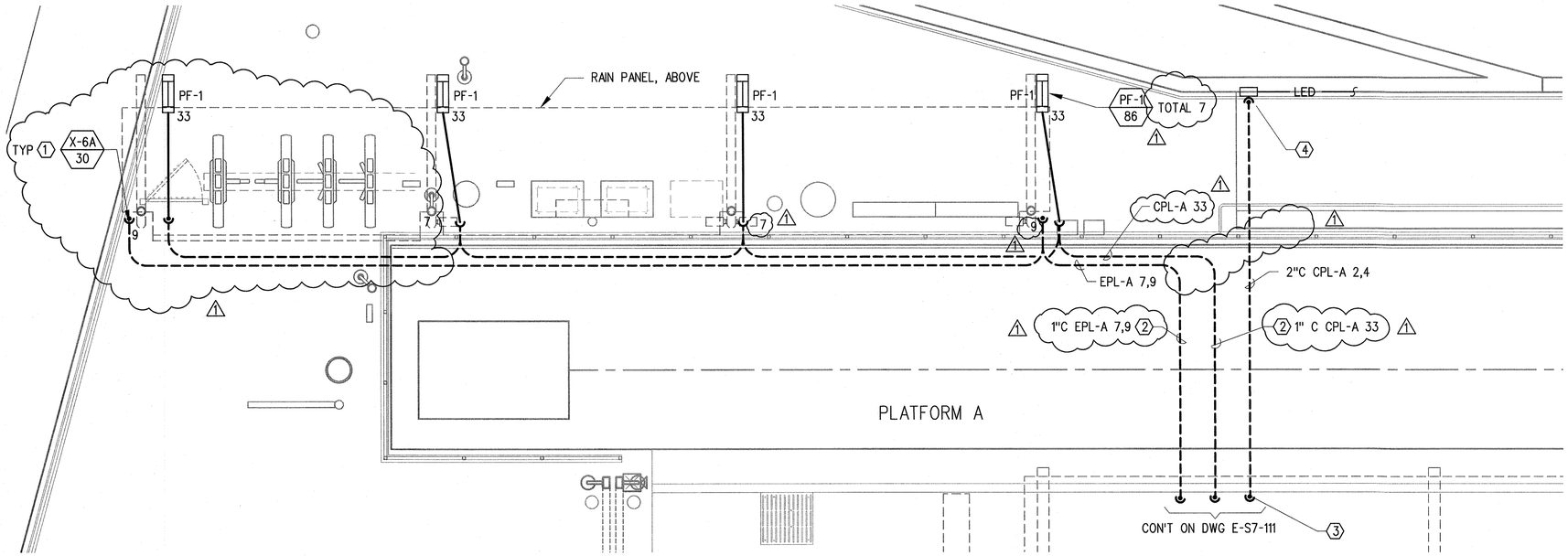

ENLARGED TICKETING AREA 1 PLAN

1/4"=1'-0"

1 / E-S7-117

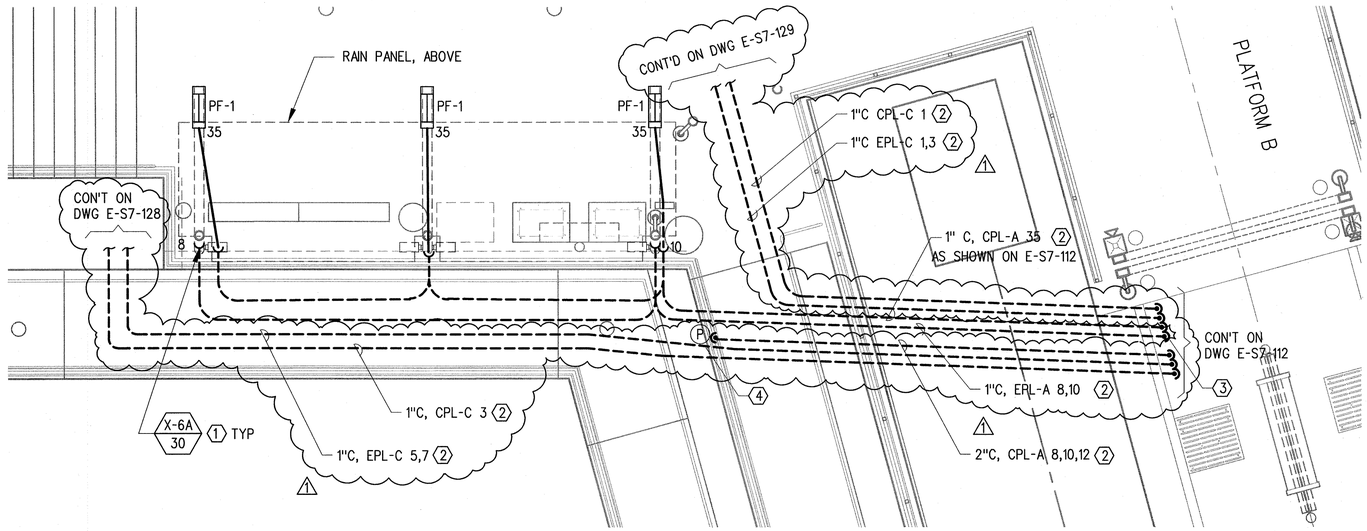

ENLARGED TICKETING AREA 2 PLAN

1/4"=1'-0"

2 / E-S7-117

NOTE:

1. FOR NOTES SEE E-S7-111

KEYNOTE:

1. SEE DRAWING E-C-014 FOR RAIN PROTECTION CANOPY LIGHTING
2. CONDUITS TO BE BURIED NO CLOSER THAN 42" FROM TOP OF RAIL.
3. STUB UP CONDUITS IN PLATFORM CRAWLSPACE PER SECTION A-A ON DRAWING NX-208
4. HANDRAIL LED DRIVER BOX RECESSED IN WALL. CONTINUED ON E-S7-123

SRJV
FEB 07 2014
ISSUED FOR CONSTRUCTION

4' 2' 0 4' 8'

THE PREPARATION OF THIS DRAWING HAS BEEN FINANCED BY THE TAXES OF THE CITIZENS OF LOS ANGELES COUNTY AND OF THE STATE OF CALIFORNIA.

REV	DATE	BY	APP	REG NO	EXPIRES	SEAL HOLDER	DESCRIPTION
1	1/14/14	AN	FSW	E11465	12/31/15	F. WALIEDDINE	ECI 79
0	6/5/13	AN	FSW	E11465	12/31/13	F. WALIEDDINE	APPROVED FOR CONSTRUCTION

DESIGNED BY A. NALBANDIAN
DRAWN BY H. HERNANDEZ
CHECKED BY F. WALIEDDINE
IN CHARGE F. WALIEDDINE
DATE 6/5/13

REGISTERED PROFESSIONAL ENGINEER — FADI S. WALIEDDINE — No. E11465 — Exp. 12-31-15 — ELECTRICAL — STATE OF CALIFORNIA

Exposition Metro Line Construction Authority
Expo

EXPO SKANSKA RADOS

444 South Flower Street
Suite 2200
Los Angeles, CA 90071
TEL (213) 443-7463
FAX (213) 362-9481

PARSONS BRINCKERHOFF

CURRENT STATUS

EXPOSITION LRT PROJECT- PHASE 2
COLORADO/4TH STREET STATION
TICKETING AREA 1 & 2
LIGHTING PLAN

Exposition Construction Authority
Approved for Construction
Drawings - AFC
FEB 06 2014

CONTRACT NO XP8902-002
DRAWING NO E-S7-117
REV 1
SCALE 1/4" = 1'-0"
SHEET NO

C:\projectwise\jobs\projectwise\thermantech\dms09028\exp02-E-S7-117.dwg
14-Jan-14 4:58 PM Hernandez, Hector L.

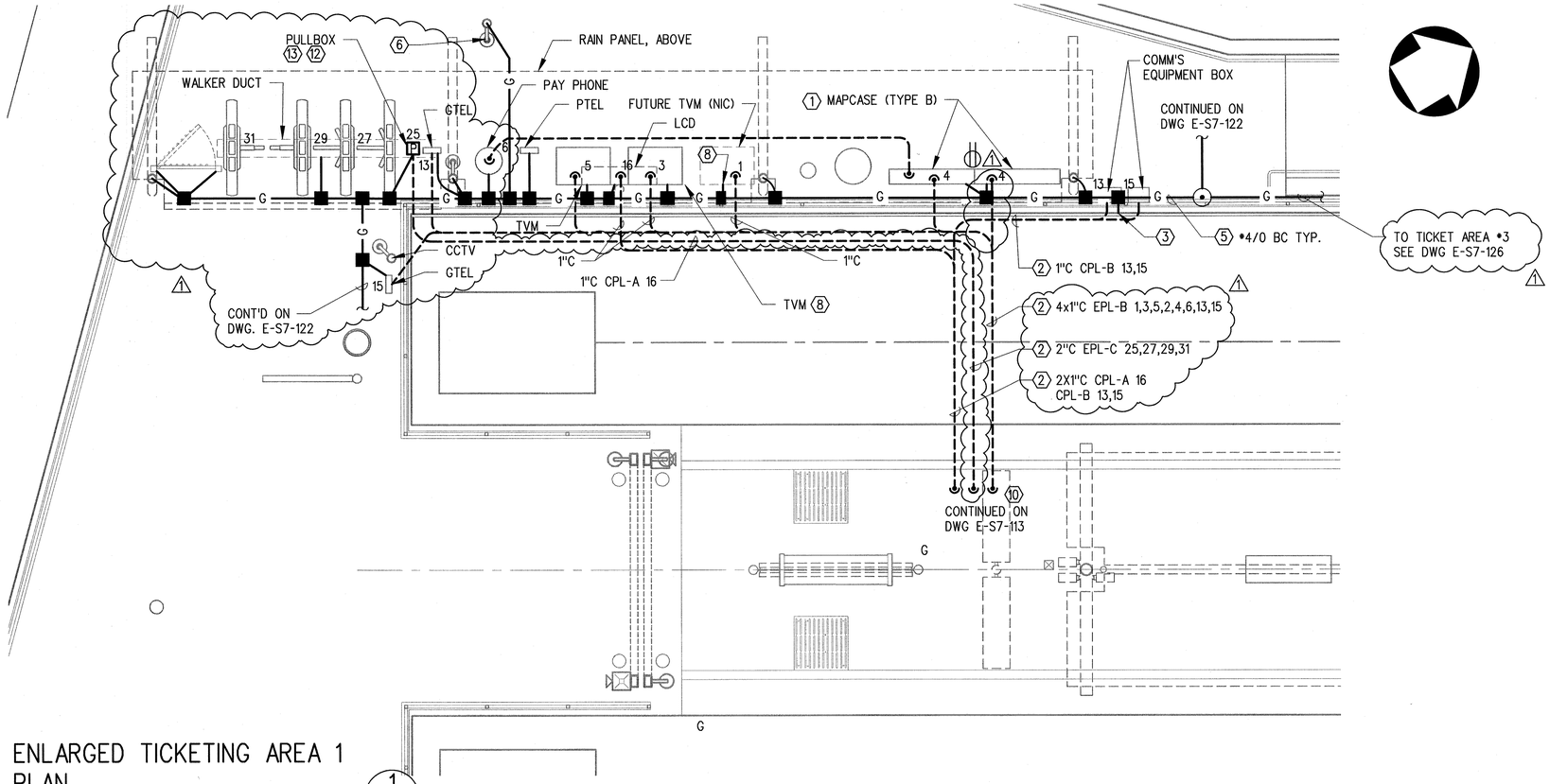

ENLARGED TICKETING AREA 1 PLAN

1/4"=1'-0"

1 / E-S7-118

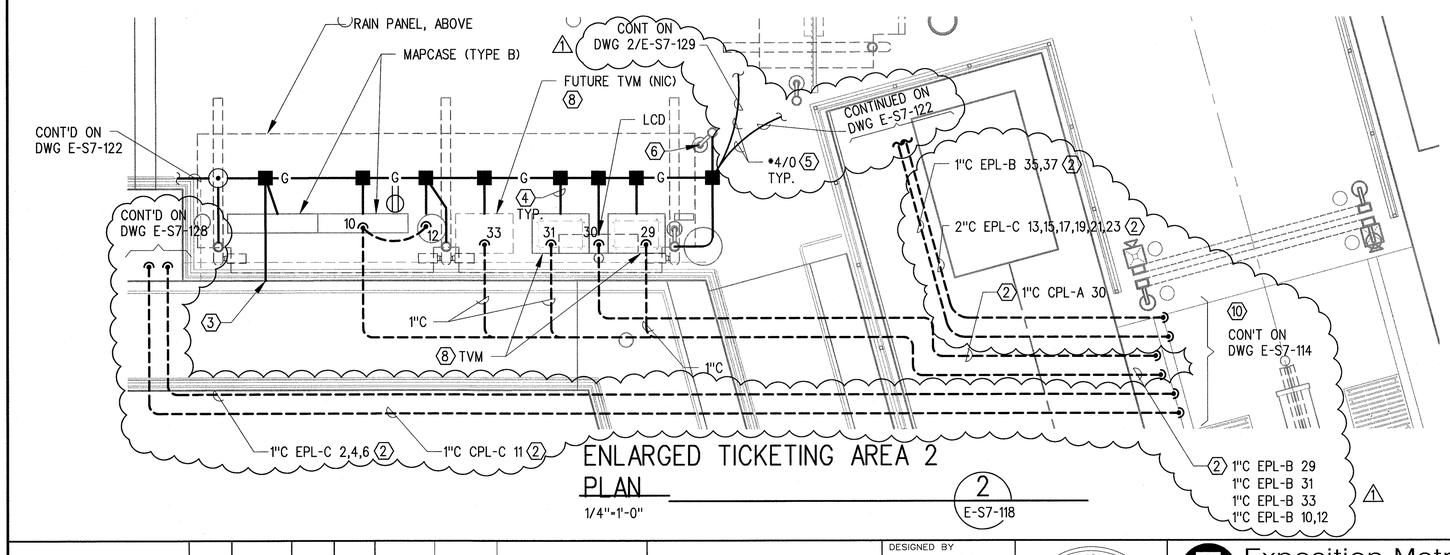

ENLARGED TICKETING AREA 2 PLAN

1/4"=1'-0"

2 / E-S7-118

NOTES:

1. GROUND ALL METALLIC ARCH STRUCTURE PROJECTING ABOVE PLATFORM, TVM, SAV, MAP CASES, HANDRAILS WITH #6 WIRE BARE COPPER GROUND CONDUCTOR EXOTHERMIC WELD TO GROUND GRID SYSTEM PER CPUC GO-143B.10.09.
2. EXHOTHERMIC WELD SHALL BE USED FOR BURIED AND EMBEDDED GROUND CONNECTIONS. CLEAN AND COAT WITH TAR MASTIC BEFORE BACKFILLING. COMPRESSION TYPE LUGS OR MECHANICAL BOLTED CONNECTORS SHALL BE USED FOR ABOVE GROUND CONNECTIONS.
3. USE CONTINUOUS GROUND CONDUCTOR WITHOUT SPLICES.
4. ALL GROUNDING, AND BONDING OF NON-CONDUCTING EXPOSED METAL PARTS OF RACEWAY SYSTEMS TO BE PER NEC ARTICLE 250.
5. NOT USED
6. CONTRATOR SHALL PROVIDE INSTALLATION DRAWINGS FOR ALL CONDUIT RUNS TO EOR FOR "INFORMATION ONLY" BEFORE THEY PROCEED WITH INSTALLATION.
7. CONDUITS AND PULLBOX LOCATION AS SHOWN ARE DIAGRAMATIC ONLY ACTUAL LOCATION AND ROUTINGS SHALL BE DETERMINED IN THE FIELD BY CONTRACTOR.
8. THE TOTAL GROUND RESISTANCE OF THE GROUND GRID MEASURED SHALL NOT EXCEED 5 OHMS. TO INSTALL GROUND RODS AS NEEDED TO ARCHIVE 5 OHM RESISTANCE, TEST POINTS AS SHOWN TO REMAIN.
9. ALL EXTERIOR RECEPTACLES TO BE GFI (PER METRO DESIGN GUIDE).
10. FOR COMMUNICATIONS COORDINATION REFERENCE NOTE 33 OF GENERAL NOTES ON DRAWING E-C-001.

KEYNOTE:

1. MAP CASE CABINETS TO COME WITH INTEGRAL MAINTENACE RECEPTACLE. CONNECT TO MAP CASE LIGHTING CIRCUIT. REFER TO ARCHITECTURAL DETAILS.
2. CONDUITS TO BE BURIED NO CLOSER THAN 42" FROM TOP OF RAIL.
3. GROUND HANDRAIL TO GROUND GRID VIA #6 WIRE FOR EVERY SECTION (SEPOARATED BY EXPANSION JOINTS).
4. GROUND WIRE SHALL BE BONDED FROM SAV, TVM, AND FARE GATE POSITIONS EQUIPMENT TO GROUNDING GRID VIA #6 WIRE, TO LEAVE 6'-0" POWER AND GROUND CABLE PIGTAIL AT EQUIPMENT FOR FUTURE CONNECTION OF EQUIPMENT FOR FUTURE CONNECTION OF EQUIPMENT. TO BE SECURED SO AS NOT TO PRESENT TRIP HAZARD.
5. GROUND GRID SIZE AND CONNECTION PER DWG E-C-004, DETAIL B, BURIED 2' (MIN) BELOW GRADE.
6. GROUND OTHER METALLIC FRAMES TO GROUNDING GRID VIA #6 WIRE.
7. NOT USED
8. CONDUIT STUB-UP, SEE DWG E-C-004, DETAIL E. COIL BACK WIRES AT CRAWL SPACE PULLBOX FOR FUTURE TVM'S
9. NOT USED
10. ROUTE POWER CONDUITS FROM GRID LINE 1 AND 13, PROVIDE WIREWAY OR PULLBOX AT APPROXIMATE LOCATION OF GRID LINE 1 AND 13, STUB-UP DUCTS IN PLATFORM CRAWLSPACE PER SECTION A-A-ON DWG NX-208.
11. SEE DETAIL 4 ON DWG E-C-004
12. 4-#6 GROUND CABLE FOR TURSTYLE COIL. IN UNDEFLOOR JUNCTION BOX, LEAVE SUFFICIENT LENGHT FOR CONNECTION TO FARE GATE WITH 6' PIGTAIL FRO CONNECTION TO FUTURE EQUIPMENT.
13. FARE COLLECTION JUNCTION AND PULLBOX. SEE DWG E-C-007, DETAIL D.

SRJV
FEB 07 2014
ISSUED FOR CONSTRUCTION

4' 2' 0 4' 8'

THE PREPARATION OF THIS DRAWING HAS BEEN FINANCED BY THE TAXES OF THE CITIZENS OF LOS ANGELES COUNTY AND OF THE STATE OF CALIFORNIA.

REV	DATE	BY	APP	REG NO	EXPIRES	SEAL HOLDER	DESCRIPTION
1	1/14/14	AN	FSW	E11465	12/31/15	F. WALIEDDINE	ECI 79
0	6/5/13	AN	FSW	E11465	12/31/13	F. WALIEDDINE	APPROVED FOR CONSTRUCTION

DESIGNED BY A. NALBANDIAN
DRAWN BY H. HERNANDEZ
CHECKED BY F. WALIEDDINE
IN CHARGE F. WALIEDDINE
DATE 6/5/13

REGISTERED PROFESSIONAL ENGINEER — FADI S. WALIEDDINE — No. E11465 — Exp. 12-31-15 — ELECTRICAL — STATE OF CALIFORNIA

Exposition Metro Line Construction Authority
Expo

EXPO SKANSKA RADOS

444 South Flower Street
Suite 2200
Los Angeles, CA 90071
TEL (213) 443-7463
FAX (213) 362-9481

PARSONS BRINCKERHOFF

Exposition Construction Authority Approved for Construction Drawings - AFC
CURRENT STATUS FEB 06 2014

EXPOSITION LRT PROJECT- PHASE 2
COLORADO/4TH STREET STATION
TICKETING AREA 1 & 2
GROUNDING & POWER PLAN

CONTRACT NO XP8902-002
DRAWING NO E-S7-118
REV 1
SCALE 1/4" = 1'-0"
SHEET NO

C:\projectwise\pb\projectwiseintlhernandezhl\ms\09028\expo2-E-S7-118.dwg
14-Jan-14 4:59 PM Hernandez, Hector L.

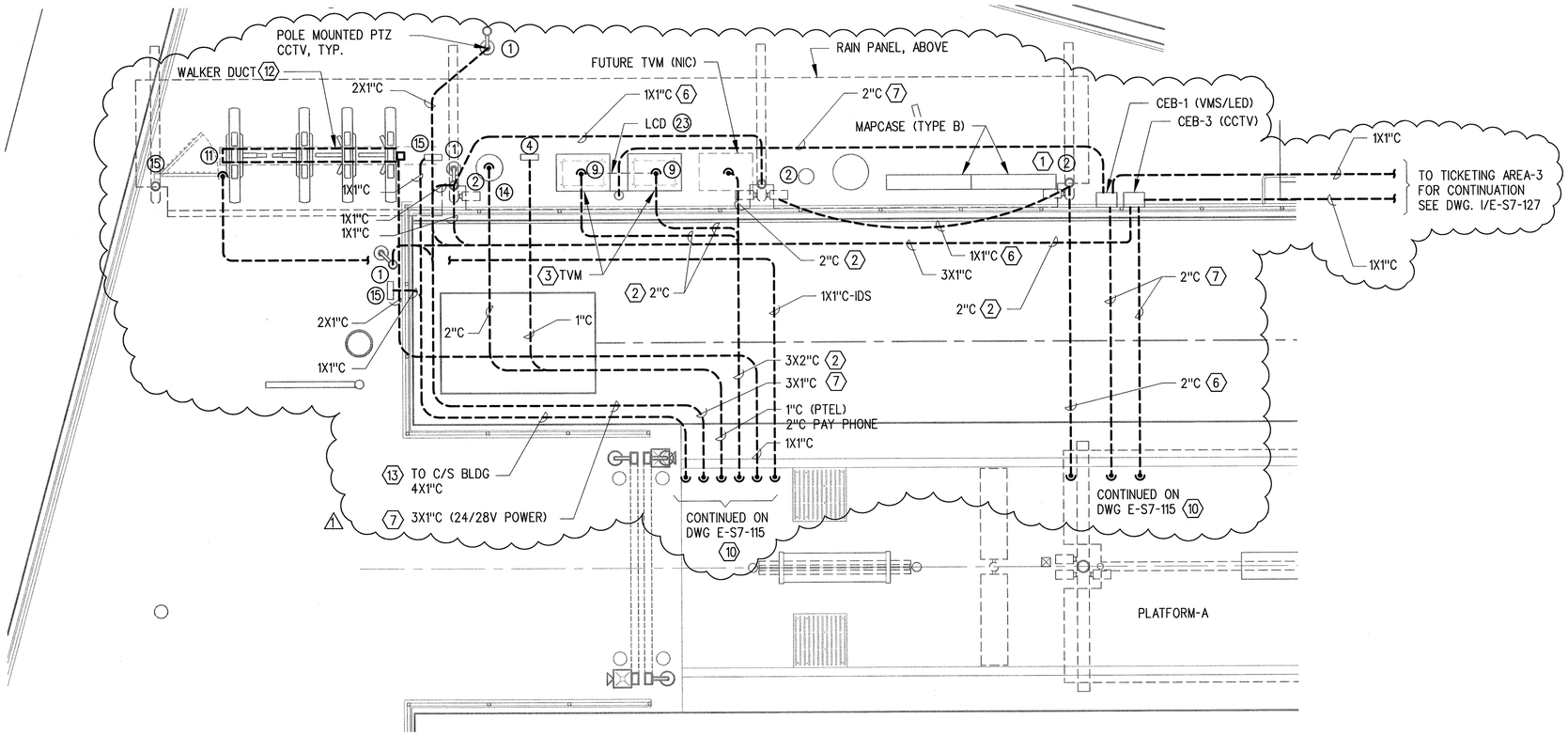

ENLARGED TICKETING AREA 1 PLAN

1/4"=1'-0"

1 / E-S7-119

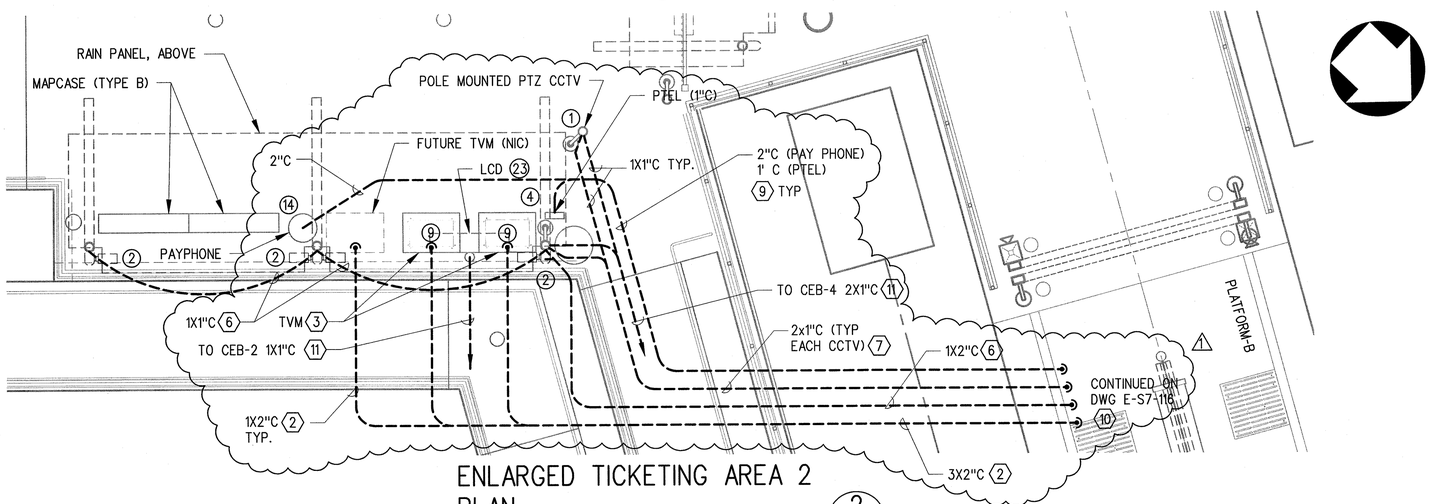

ENLARGED TICKETING AREA 2 PLAN

1/4"=1'-0"

2 / E-S7-119

NOTES:

1. CONTRACTOR SHALL PROVIDE INSTALLATION DRAWINGS FOR ALL CONDUIT RUNS TO EOR "FOR INFORMATION ONLY" BEFORE THEY PROCEED WITH INSTALLATION.
2. CONDUIT AND PULLBOX LOCATIONS AS SHOWN ARE DIAGRAMATIC ONLY. ACTUAL LOCATIONS AND ROUTINGS TO BE SHOWN ON INSTALLATION DRAWINGS. 1
3. NOT USED
4. FOR COMMUNICATIONS COORDINATION REFERENCE NOTE 33 OF GENERAL NOTES ON DRAWING E-C-001.

KEYNOTES:

1. FOR DESCRIPTION OF EQUIPMENT, SEE DWG E-C-003.
2. DEDICATED CONDUIT FOR 'UFS' SYSTEM. NO OTHER COMMUNICATION SYSTEM TO USE CONDUIT. CONDUIT/ RACEWAY TO BE LEGIBLY MARKED "UFS WIREWAY SYSTEM CONDUIT ONLY".
3. CONDUIT STUB-UP. SEE DWG E-C-004, DETAIL E.
4. NOT USED. 1
5. ROUTE IN RAMP COMMUNICATION CONDUITS FROM GRIDLINE 1. PROVIDE WIREWAY OR PULLBOX AT APPROXIMATE LOCATION OF GRIDLINE 1. STUB-UP DUCTS IN PLATFORM CRAWLSPACE PER SECTION A-A ON DWG NX-208.
6. DEDICATED CONDUIT FOR PA SYSTEM. NO OTHER COMMUNICATION SYSTEM TO USE CONDUIT.
7. DEDICATED CONDUIT FOR CCTV AND VMS/LED. NO OTHER COMMUNICATION SYSTEM TO USE CONDUIT.
8. NOT USED.
9. CONDUITS TO BE BURIED NO CLOSER THAN 42" FROM BOTTOM OF RAIL.
10. ROUTE CONDUITS AND STUB AT DESIGNATED PULLBOX AT PLATFORM CRAWL SPACE.
11. ROUTE CONDUITS TO COMMUNICATION BOX CEB-2 OR CEB-4 AT TOS BOOTH. SEE DWG. 3/E-S7-120.
12. *2 WALKERDUCT RECESSED INTO FLOOR. SEE DWG E-C-007, DETAIL F.
13. DEDICATED CONDUITS FOR GTEL PHONE ONLY. 1

SRJV
FEB 07 2014
ISSUED FOR CONSTRUCTION

4' 2' 0 4' 8'

THE PREPARATION OF THIS DRAWING HAS BEEN FINANCED BY THE TAXES OF THE CITIZENS OF LOS ANGELES COUNTY AND OF THE STATE OF CALIFORNIA.

REV	DATE	BY	APP	REG NO	EXPIRES	SEAL HOLDER	DESCRIPTION
1	1/14/14	AN	FSW	E11465	12/31/15	F. WALIEDDINE	ECI 79
0	5/30/13	AN	FSW	E11465	12/31/13	F. WALIEDDINE	APPROVED FOR CONSTRUCTION

DESIGNED BY A. NALBANDIAN
DRAWN BY H. HERNANDEZ
CHECKED BY F. WALIEDDINE
IN CHARGE F. WALIEDDINE
DATE 5/30/13

REGISTERED PROFESSIONAL ENGINEER — FADI S. WALIEDDINE — No. E11465 — Exp. 12-31-15 — ELECTRICAL — STATE OF CALIFORNIA

Exposition Metro Line Construction Authority
Expo

EXPO SKANSKA RADOS

444 South Flower Street
Suite 2200
Los Angeles, CA 90071
TEL (213) 443-7463
FAX (213) 362-9481

PARSONS BRINCKERHOFF

Exposition Construction Authority
Approved for Construction
Drawings - AFC

CURRENT STATUS FEB 06 2014

EXPOSITION LRT PROJECT- PHASE 2
COLORADO/4TH STREET STATION
TICKETING AREA 1 & 2
COMMUNICATION & UFS PLAN

CONTRACT NO XP8902-002
DRAWING NO E-S7-119
REV 1
SCALE 1/4" = 1'-0"
SHEET NO

C:\projectwise\pb\projectwiseintl\hernandezh\dms09028\expo2-E-S7-119.dwg
14-Jan-14 5:00 PM Hernandez, Hector L.

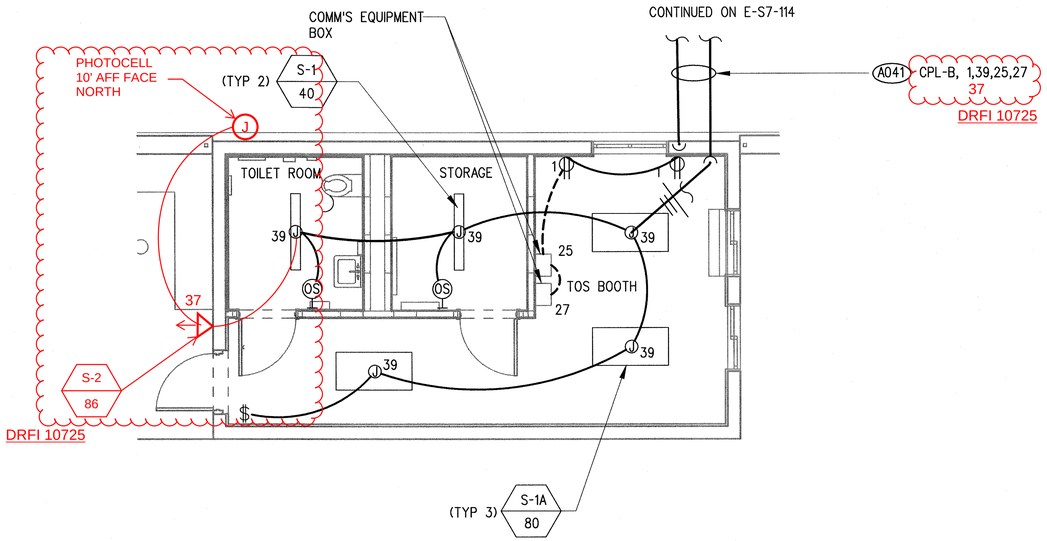

TRAIN OPERATOR SUPERVISOR BOOTH LIGHTING AND CP POWER PLAN

1/4"=1'-0"

1 E-S7-120

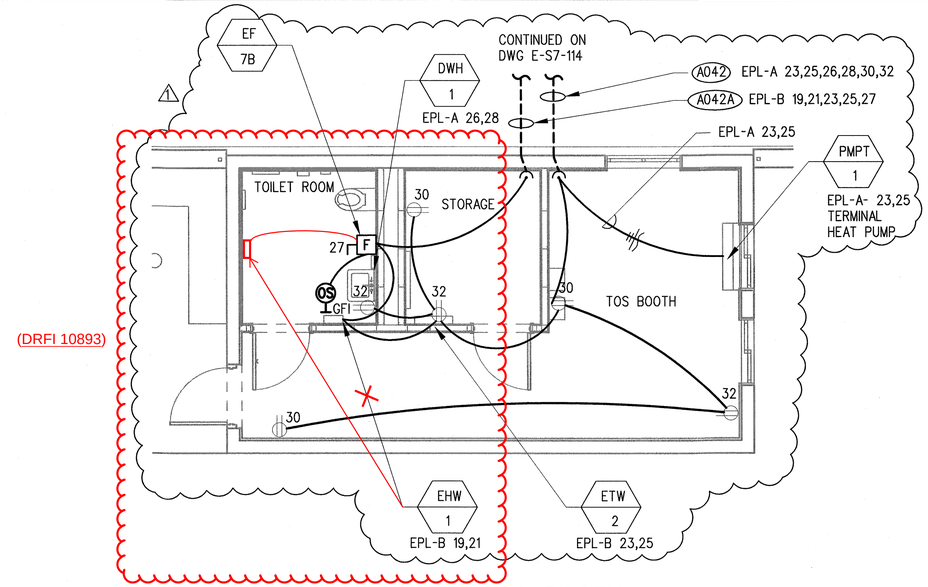

TRAIN OPERATOR SUPERVISOR BOOTH EP POWER PLAN

1/4"=1'-0"

2 E-S7-120

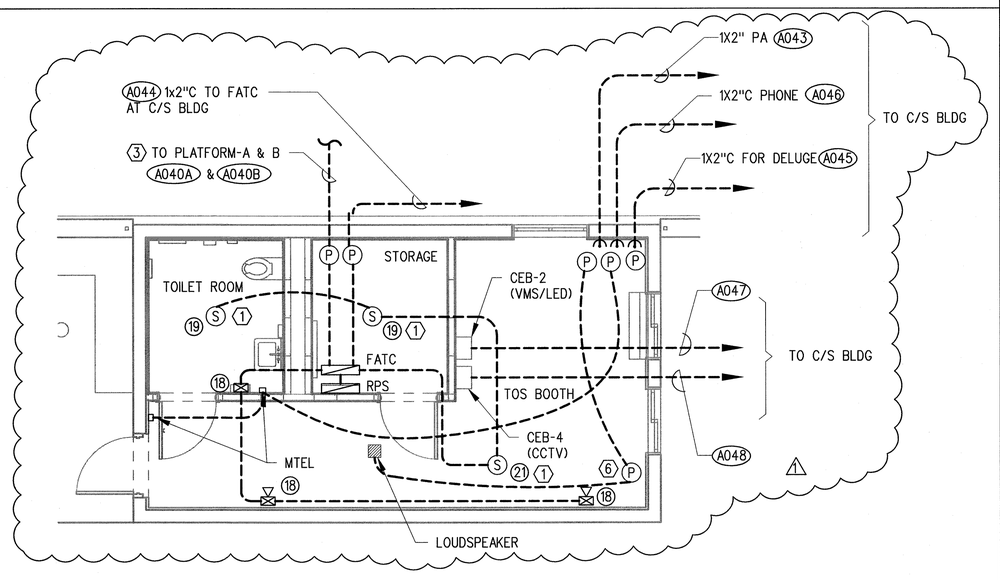

TRAIN OPERATOR SUPERVISOR BOOTH COMMUNICATION & FIRE ALARM PLAN

1/4"=1'-0"

3 E-S7-120

NOTE:

1. SMOKE DETECTORS MOUNTED ON CEILING DECK
2. ITEM ELEVATED WALL (APPROXIMATE 7'-0")
3. DEDICATED CONDUITS FOR FIRE ALARM SYSTEM ONLY, U.N.O.

SRJV
FEB 07 2014
ISSUED FOR CONSTRUCTION

4' 2' 0 4' 8'

THE PREPARATION OF THIS DRAWING HAS BEEN FINANCED BY THE TAXES OF THE CITIZENS OF LOS ANGELES COUNTY AND OF THE STATE OF CALIFORNIA.

REV	DATE	BY	APP	REG NO	EXPIRES	SEAL HOLDER	DESCRIPTION
1	1/14/14	AN	FSW	E11465	12/31/15	F. WALIEDDINE	ECI 79
0	6/5/13	AN	FSW	E11465	12/31/13	F. WALIEDDINE	APPROVED FOR CONSTRUCTION

DESIGNED BY A. NALBANDIAN
DRAWN BY H. HERNANDEZ
CHECKED BY F. WALIEDDINE
IN CHARGE F. WALIEDDINE
DATE 6/5/13

REGISTERED PROFESSIONAL ENGINEER
FADI S. WALIEDDINE
No. E11465
Exp. 12-31-15
ELECTRICAL
STATE OF CALIFORNIA

Exposition Metro Line Construction Authority
Expo

Exposition Construction Authority
Approved for Construction
Drawings - AFC
FEB 06 2014

EXPO SKANSKA RADOS

444 South Flower Street
Suite 2200
Los Angeles, CA 90071
TEL (213) 443-7463
FAX (213) 362-9481

PARSONS BRINCKERHOFF

CURRENT STATUS

EXPOSITION LRT PROJECT- PHASE 2
COLORADO/4TH STREET STATION
TRAIN OPERATOR SUPERVISOR BOOTH
LIGHTING, POWER FIRE ALARM AND
COMMUNICATION PLAN

CONTRACT NO XP8902-002
DRAWING NO E-S7-120
REV 1
SCALE 1/4" = 1'-0"
SHEET NO

C:\projectwise\pb\projectwiseintl\hernandezh\dms09028\expo2-E-S7-120.dwg
14-Jan-14 5:00 PM Hernandez, Hector L.

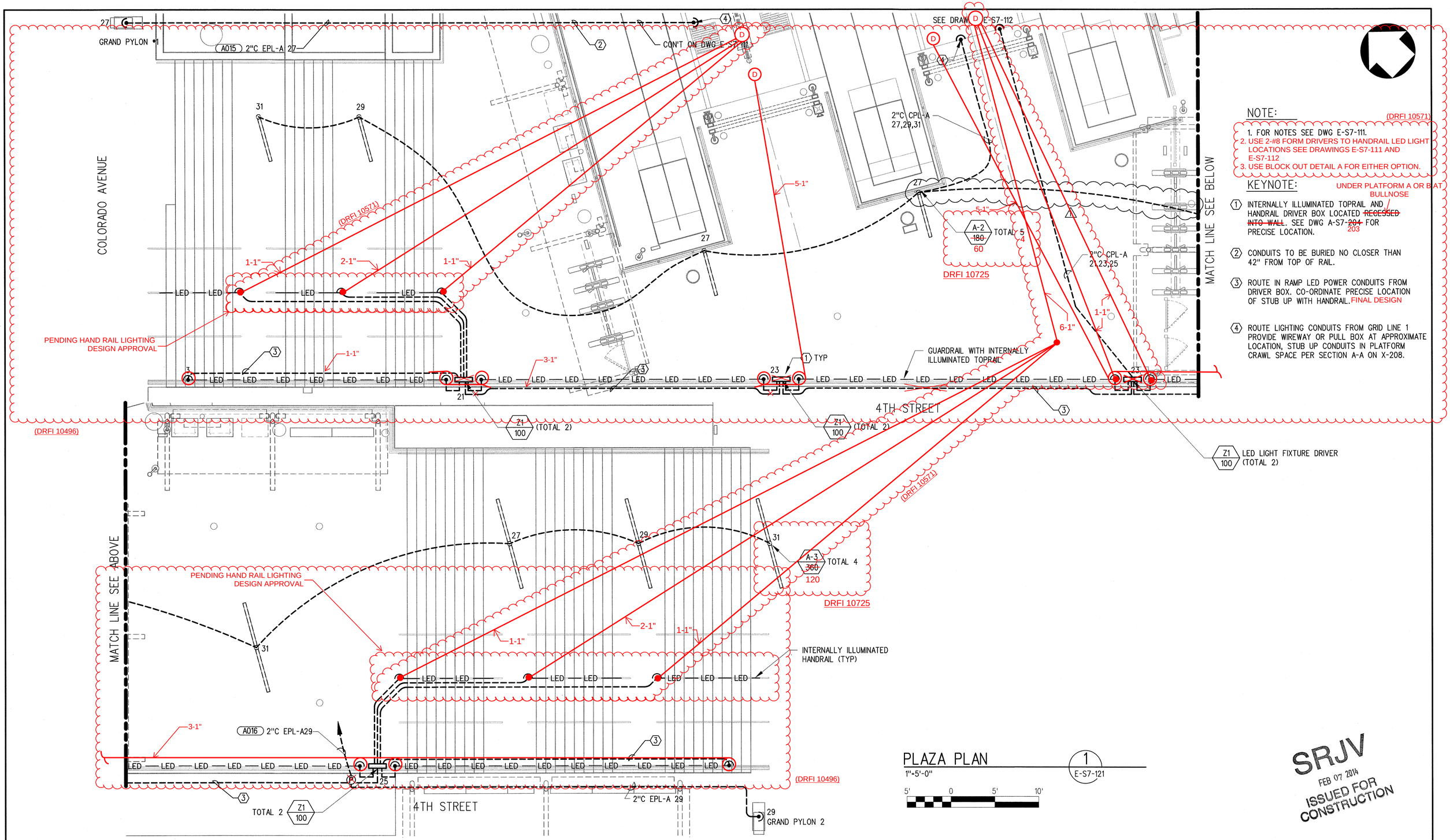

NOTE:

(DRFI 10571)

1. FOR NOTES SEE DWG E-S7-111.
2. USE 2-#8 FORM DRIVERS TO HANDRAIL LED LIGHT LOCATIONS SEE DRAWINGS E-S7-111 AND E-S7-112
3. USE BLOCK OUT DETAIL A FOR EITHER OPTION.

KEYNOTE:

UNDER PLATFORM A OR B AT BULLNOSE

1. INTERNALLY ILLUMINATED TOPRAIL AND HANDRAIL DRIVER BOX LOCATED ~~RECESSED INTO WALL~~. SEE DWG A-S7-~~204~~ 203 FOR PRECISE LOCATION.
2. CONDUITS TO BE BURIED NO CLOSER THAN 42" FROM TOP OF RAIL.
3. ROUTE IN RAMP LED POWER CONDUITS FROM DRIVER BOX. CO-ORDINATE PRECISE LOCATION OF STUB UP WITH HANDRAIL. FINAL DESIGN
4. ROUTE LIGHTING CONDUITS FROM GRID LINE 1 PROVIDE WIREWAY OR PULL BOX AT APPROXIMATE LOCATION, STUB UP CONDUITS IN PLATFORM CRAWL SPACE PER SECTION A-A ON X-208.

PLAZA PLAN 1 E-S7-121

1"=5'-0"

5' 0 5' 10'

SRJV FEB 07 2014 ISSUED FOR CONSTRUCTION

THE PREPARATION OF THIS DRAWING HAS BEEN FINANCED BY THE TAXES OF THE CITIZENS OF LOS ANGELES COUNTY AND OF THE STATE OF CALIFORNIA.

REV	DATE	BY	APP	REG NO	EXPIRES	SEAL HOLDER	DESCRIPTION
1	1/14/14	AN	FSW	E11465	12/31/15	F. WALIEDDINE	ECI 79
0	6/5/13	AN	FSW	E11465	12/31/13	F. WALIEDDINE	APPROVED FOR CONSTRUCTION

DESIGNED BY A. NALBANDIAN
DRAWN BY H. HERNANDEZ
CHECKED BY F. WALIEDDINE
IN CHARGE F. WALIEDDINE
DATE 6/5/13

REGISTERED PROFESSIONAL ENGINEER FADI S. WALIEDDINE No. E11465 Exp. 12-31-15 ELECTRICAL STATE OF CALIFORNIA

Exposition Metro Line Construction Authority
Expo

EXPO SKANSKA RADOS

444 South Flower Street
Suite 2200
Los Angeles, CA 90071
TEL (213) 443-7463
FAX (213) 362-9481

PARSONS BRINCKERHOFF

CURRENT STATUS

EXPOSITION LRT PROJECT- PHASE 2
COLORADO/4TH STREET STATION
PLAZA LIGHTING PLAN

Exposition Construction Authority
Approved for Construction
Drawings - AFC
FEB 06 2014

CONTRACT NO XP8902-002
DRAWING NO E-S7-121
REV 1
SCALE 1"=5'-0"
SHEET NO

C:\projectwise\bl\bl\projectwise\intl\hernandezh\dms09\0026\exp02-E-S7-121.dwg
14-Jan-14 5:03 PM Hernandez, Hector L.

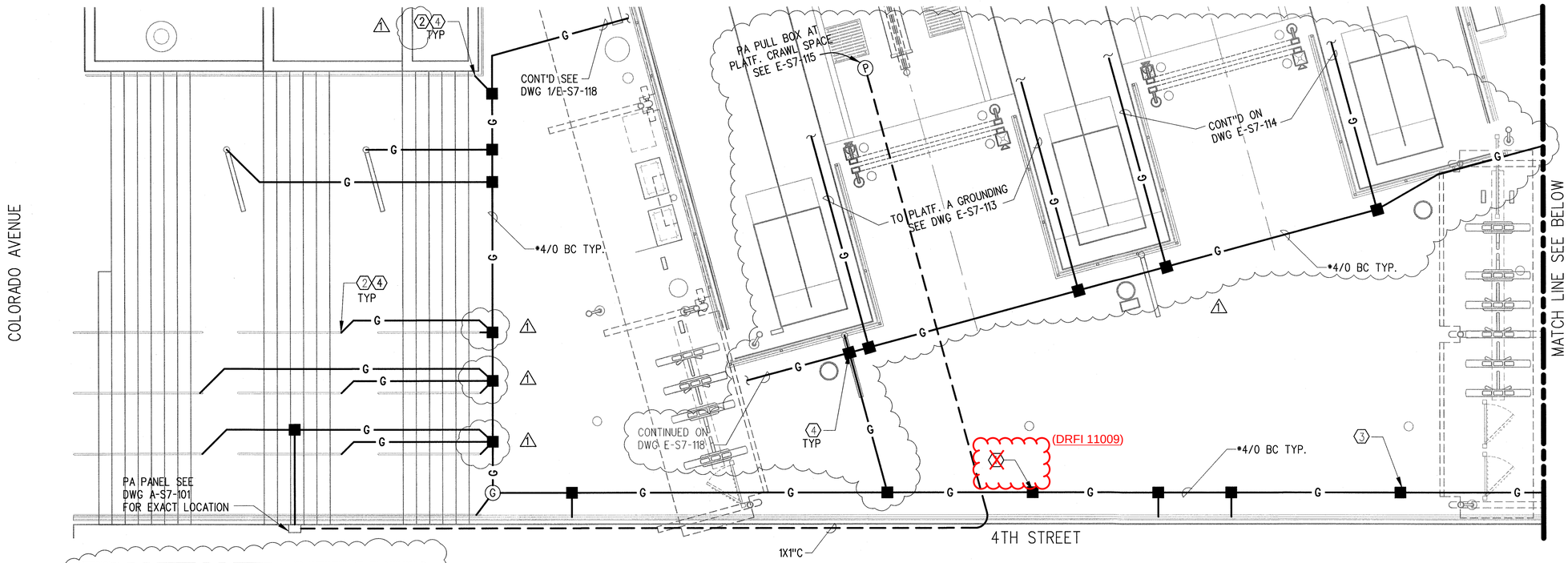

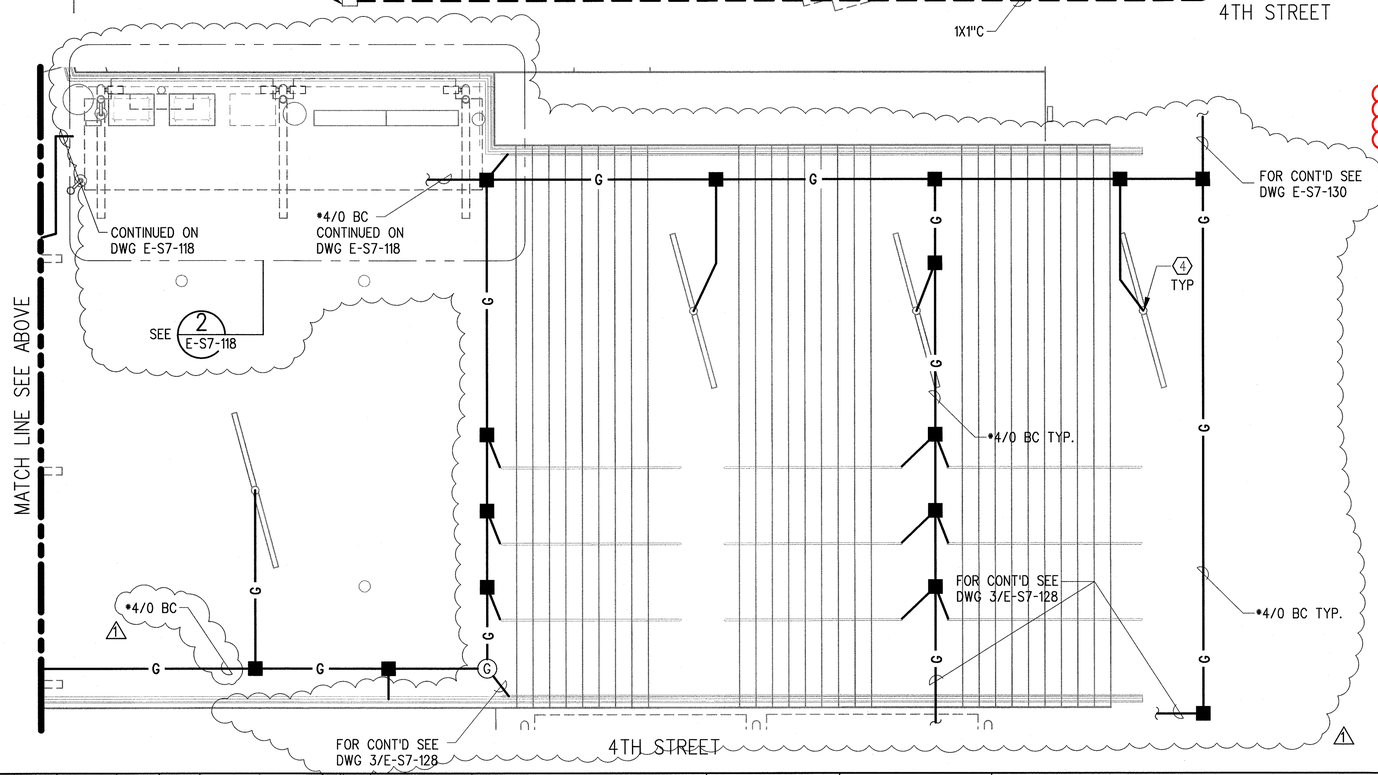

KEYNOTES:

(DRFI 11009)

1. ~~BOND GROUND CABLE TO LATERAL REBAR AT 4'-0" INTERVALS AROUND THE PERIMETER AS SHOWN AND 2'-0" BELOW GRADE TO GROUND GRID VIA •6 WIRE.~~
2. GROUND HANDRAIL TO GROUND GRID VIA •6 WIRE FOR EVERY SECTION (SEPARATED BY EXPANSION JOINTS).
3. GROUND GRID SIZE AND CONNECTIONS PER DWG E-C-004, DETAIL B. BURIED 2' (MIN) BELOW GRADE
4. GROUND OTHER METALLIC FRAMES TO GROUNDING GRID VIA •6 WIRE.

NOTES:

1. GROUND ALL METALLIC ARCH STRUCTURE PROJECTING ABOVE PLATFORM, TVM, SAV, MAP CASES, HANDRAILS WITH •6 BARE COPPER GROUND CONDUCTOR EXOTHERMIC WELD TO GROUND GRID SYSTEM PER CPUC GO-143B.10.09.
2. EXOTHERMIC WELD SHALL BE USED FOR BURIED AND EMBEDDED GROUND CONNECTIONS. CLEAN AND COAT WITH TAR MASTIC BEFORE BACKFILLING. COMPRESSION TYPE LUGS OR MECHANICAL BOLTED CONNECTORS SHALL BE USED FOR ABOVE GROUND CONNECTIONS.
3. USE CONTINUOUS GROUND CONDUCTOR WITHOUT SPLICES.
4. ALL GROUNDING, AND BONDING OF NON-CONDUCTING EXPOSED METAL PARTS OF RACEWAY SYSTEMS TO BE PER NEC ARTICLE 250.
5. NOT USED.
6. CONTRACTOR SHALL PROVIDE INSTALLATION DRAWINGS FOR ALL CONDUIT RUNS TO EOR FOR 'INFORMATION ONLY' BEFORE THEY PROCEED WITH INSTALLATION.
7. CONDUIT AND PULLBOX LOCATIONS AS SHOWN ARE DIAGRAMATIC ONLY ACTUAL LOCATIONS AND ROUTINGS SHALL BE DETERMINED IN THE FIELD BY CONTRACTOR.
8. NOT USED.
9. THE TOTAL GROUND RESISTANCE OF THE GROUND GRID MEASURED SHALL NOT EXCEED 5 OHMS. TO INSTALL GROUND RODS AS NEEDED TO ACHIEVE 5 OHM RESISTANCE, TEST POINTS AS SHOWN TO REMAIN.
10. ALL EXTERIOR RECEPTACLES TO BE GFI (PER METRO DESIGN GUIDE).
11. FOR COMMUNICATIONS COORDINATION REFERENCE NOTE 33 OF GENERAL NOTES ON DRAWING E-C-001.

PLAZA PLAN (1 / E-S7-122)

1"=5'-0"

5' 0 5' 10'

SRJV
FEB 07 2014
ISSUED FOR CONSTRUCTION

THE PREPARATION OF THIS DRAWING HAS BEEN FINANCED BY THE TAXES OF THE CITIZENS OF LOS ANGELES COUNTY AND OF THE STATE OF CALIFORNIA.

REV	DATE	BY	APP	REG NO	EXPIRES	SEAL HOLDER	DESCRIPTION
1	1/14/14	AN	FSW	E11465	12/31/15	F. WALIEDDINE	ECI 79
0	6/5/13	AN	FSW	E11465	12/31/13	F. WALIEDDINE	APPROVED FOR CONSTRUCTION

DESIGNED BY A. NALBANDIAN
DRAWN BY H. HERNANDEZ
CHECKED BY F. WALIEDDINE
IN CHARGE F. WALIEDDINE
DATE 6/5/13

REGISTERED PROFESSIONAL ENGINEER — FADI S. WALIEDDINE — No. E11465 — Exp. 12-31-15 — ELECTRICAL — STATE OF CALIFORNIA

Exposition Metro Line Construction Authority
Expo

EXPO SKANSKA RADOS

444 South Flower Street
Suite 2200
Los Angeles, CA 90071
TEL (213) 443-7463
FAX (213) 362-9481

PARSONS BRINCKERHOFF

Exposition Construction Authority
Approved for Construction
Drawings - AFC

CURRENT STATUS FEB 06 2014

EXPOSITION LRT PROJECT- PHASE 2
COLORADO/4TH STREET STATION
PLAZA POWER AND
GROUNDING AND COMMUNICATION PLAN

CONTRACT NO XP8902-002
DRAWING NO E-S7-122
REV 1
SCALE 1"=5'-0"
SHEET NO

C:\projectwise\pb\projectwiseintl\hernandezh\dms09028\expo2-E-S7-122.dwg
14-Jan-14 5:04 PM Hernandez, Hector L.

(DRFI 10571)

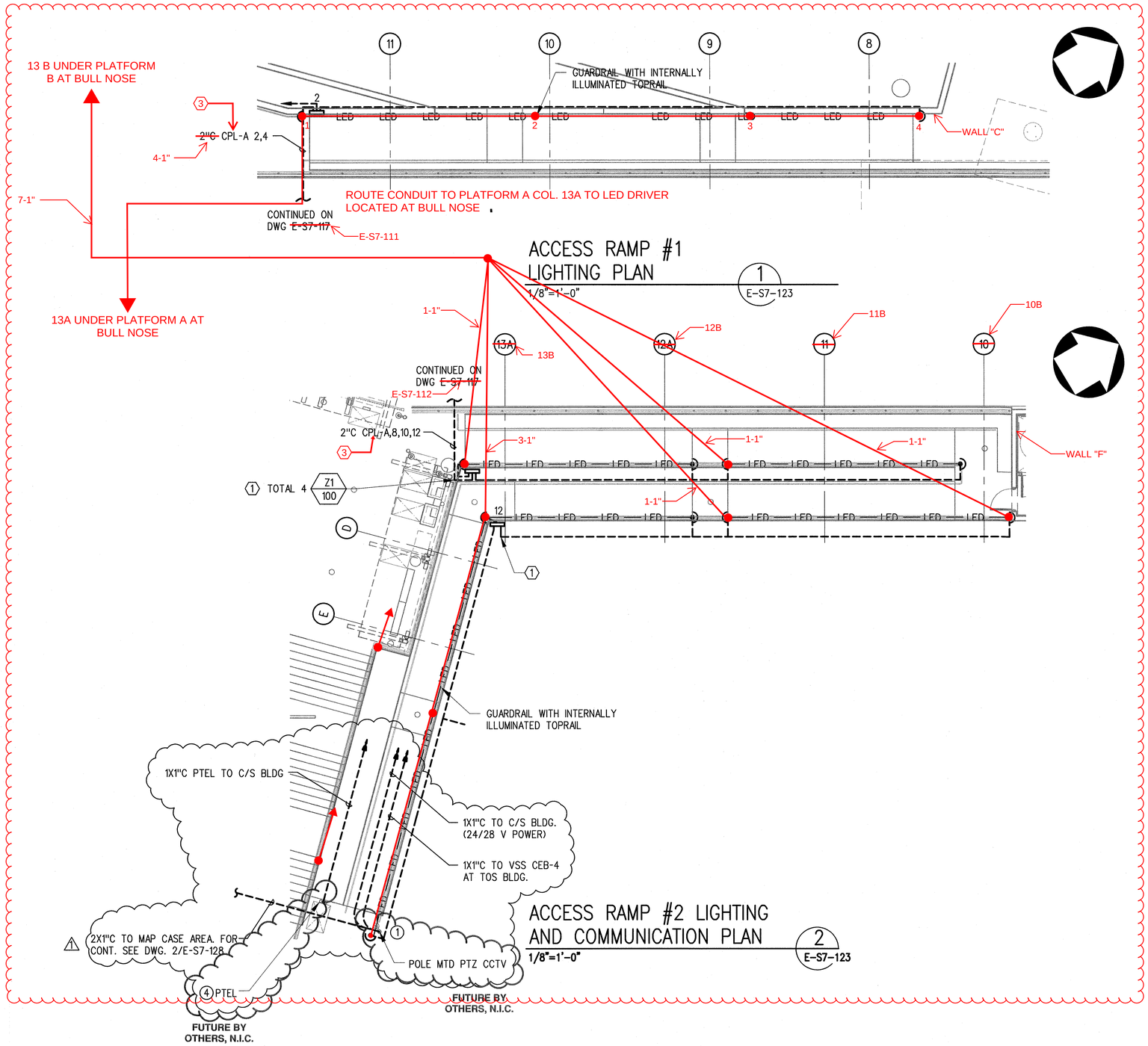

NOTE:

1. FOR NOTES SEE E-S7-111

KEYNOTE:

1. INTERNALLY ILLUMINATED TOPRAIL AND HANDRAIL DRIVER BOX LOCATED RECESSED INTO WALL. SEE DWG A-S7-205 FOR PRECISE LOCATION.
2. ROUTE IN RAMP LED POWER CONDUITS FROM DRIVER BOX COORDINATE PRECISE LOCATION OF STUB UP WITH HANDRAIL
3. CPL-CIRCUIT FEED DRIVERS UNDER PLATFORM USE 2 #8 FROM DRIVERS TO HANDRAIL LED LIGHT LOCATIONS

(DRFI 10571)

SRJV
FEB 07 2014
ISSUED FOR CONSTRUCTION

8' 4' 0 8' 16'

THE PREPARATION OF THIS DRAWING HAS BEEN FINANCED BY THE TAXES OF THE CITIZENS OF LOS ANGELES COUNTY AND OF THE STATE OF CALIFORNIA.

REV	DATE	BY	APP	REG NO	EXPIRES	SEAL HOLDER	DESCRIPTION
1	1/14/14	AN	FSW	E11465	12/31/15	F. WALIEDDINE	ECI 79
0	6/5/13	AN	FSW	E11465	12/31/13	F. WALIEDDINE	APPROVED FOR CONSTRUCTION

DESIGNED BY A. NALBANDIAN
DRAWN BY H. HERNANDEZ
CHECKED BY F. WALIEDDINE
IN CHARGE F. WALIEDDINE
DATE 6/5/13

REGISTERED PROFESSIONAL ENGINEER
FADI S. WALIEDDINE
No. E11465
Exp. 12-31-15
ELECTRICAL
STATE OF CALIFORNIA

Exposition Metro Line Construction Authority
Expo

EXPO SKANSKA RADOS

444 South Flower Street
Suite 2200
Los Angeles, CA 90071
TEL (213) 443-7463
FAX (213) 362-9481

PARSONS BRINCKERHOFF

Exposition Construction Authority
Approved for Construction
Drawings - AFC
FEB 06 2014

CURRENT STATUS

EXPOSITION LRT PROJECT- PHASE 2
COLORADO/4TH STREET STATION
ACCESS RAMPS LIGHTING
AND COMMUNICATION PLAN

CONTRACT NO XP8902-002
DRAWING NO E-S7-123
REV 1
SCALE 1/8" = 1'-0"
SHEET NO

C:\projectwise\pb\projectwiseintthernandezhdms09028\exp02-E-S7-123.dwg
14-Jan-14 5:05 PM Hernandez, Hector L.

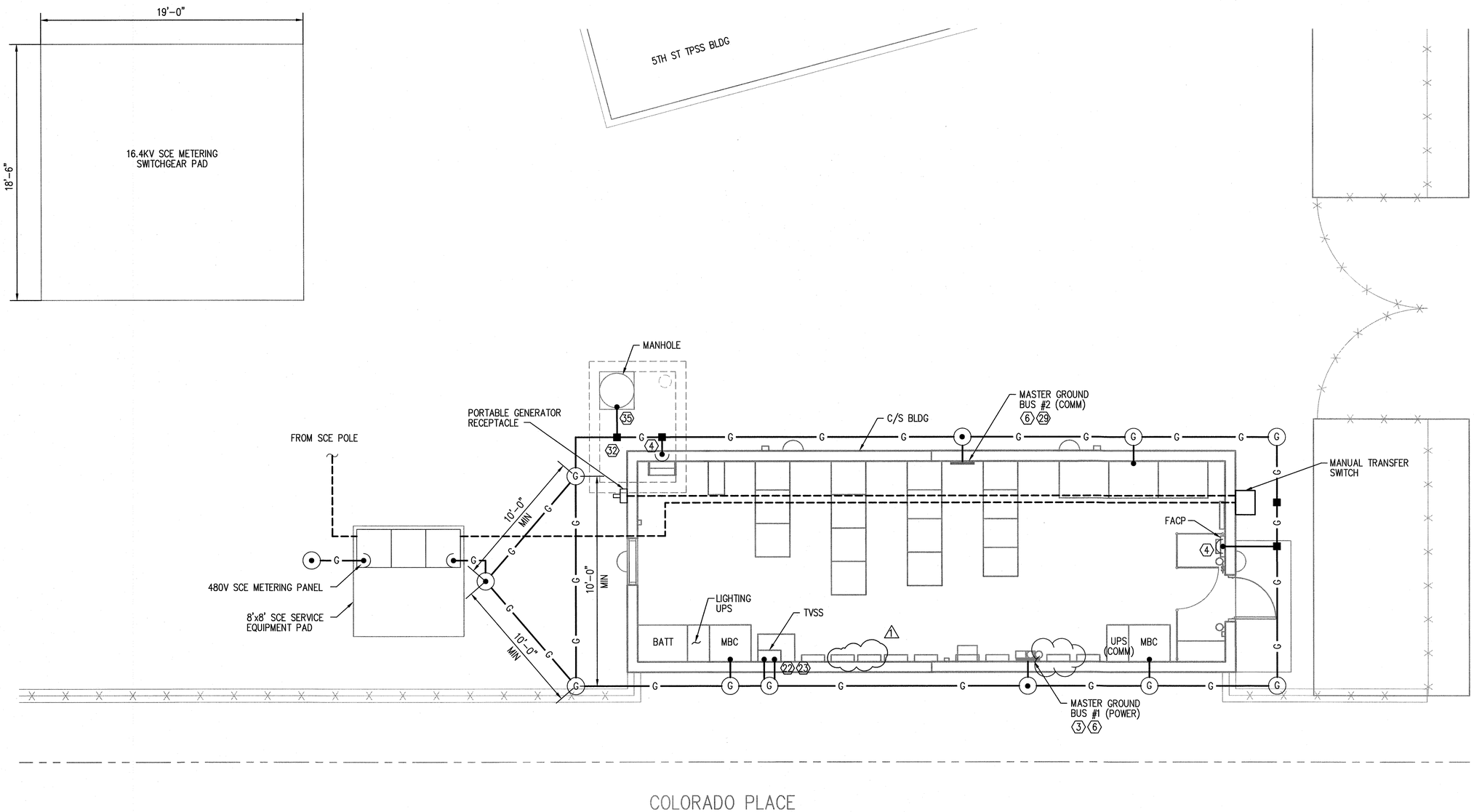

NOTE:

1. FOR NOTES AND KEYNOTES, SEE DWG E-S7-170.

SITE PLAN 1/4"=1'-0" (1 / E-S7-124)

4' 2' 0 4' 8'

SRJV
FEB 07 2014
ISSUED FOR CONSTRUCTION

THE PREPARATION OF THIS DRAWING HAS BEEN FINANCED BY THE TAXES OF THE CITIZENS OF LOS ANGELES COUNTY AND OF THE STATE OF CALIFORNIA.

REV	DATE	BY	APP	REG NO	EXPIRES	SEAL HOLDER	DESCRIPTION
1	1/14/14	AN	FSW	E11465	12/31/15	F. WALIEDDINE	ECI 79
0	6/5/13	AN	FSW	E11465	12/31/13	F. WALIEDDINE	APPROVED FOR CONSTRUCTION

DESIGNED BY A. NALBANDIAN
DRAWN BY H. HERNANDEZ
CHECKED BY F. WALIEDDINE
IN CHARGE F. WALIEDDINE
DATE 6/5/13

REGISTERED PROFESSIONAL ENGINEER — FADI S. WALIEDDINE No. E11465 Exp. 12-31-15 ELECTRICAL — STATE OF CALIFORNIA

Exposition Metro Line Construction Authority
Expo

EXPO SKANSKA RADOS

444 South Flower Street
Suite 2200
Los Angeles, CA 90071
TEL (213) 443-7463
FAX (213) 362-9481

PARSONS BRINCKERHOFF

Exposition Construction Authority Approved for Construction Drawings - AFC

CURRENT STATUS FEB 06 2014

EXPOSITION LRT PROJECT- PHASE 2
COLORADO/4TH STREET STATION
TPSS 5th STREET SITE PLAN
POWER AND GROUNDING PLAN

CONTRACT NO XP8902-002
DRAWING NO E-S7-124
REV 1
SCALE 1/4" = 1'-0"
SHEET NO

C:\projectwise\pb\projectwise\int\hernandezh\dms09028\expo2-E-S7-124.dwg
Hernandez, Hector L. 14-Jan-14 2:20 PM

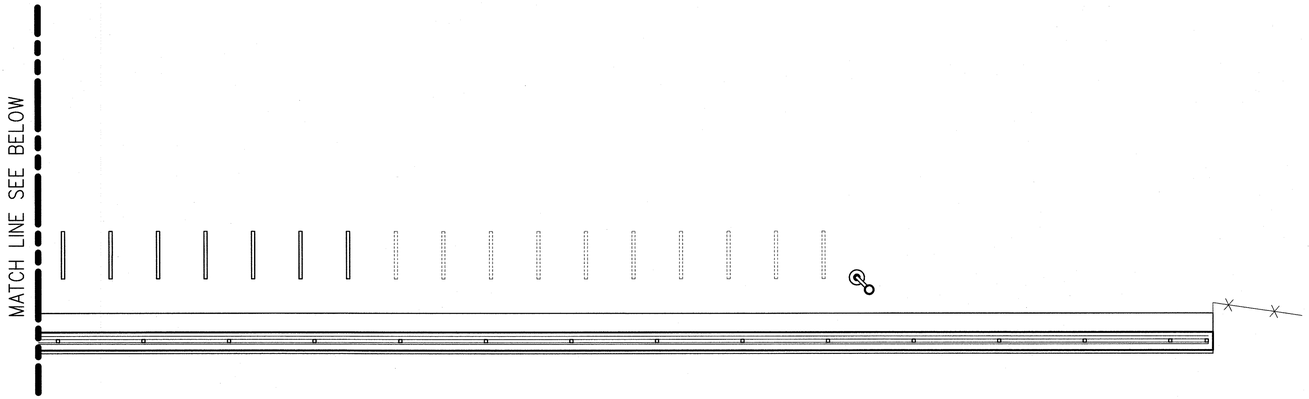

ENLARGED TICKETING
AREA #3 PLAN

1/4"=1'-0"

2
A-S7-114

NOTE:

1. FOR NOTES AND SEE DWG E-S7-111

KEY NOTES:

1. SEE DRAWINGS E-C-014 FOR RAIN CANOPY LIGHTING.
2. CONDUITS TO BE BURIED NO CLOSER THAN 42" FROM TOP OF RAIL

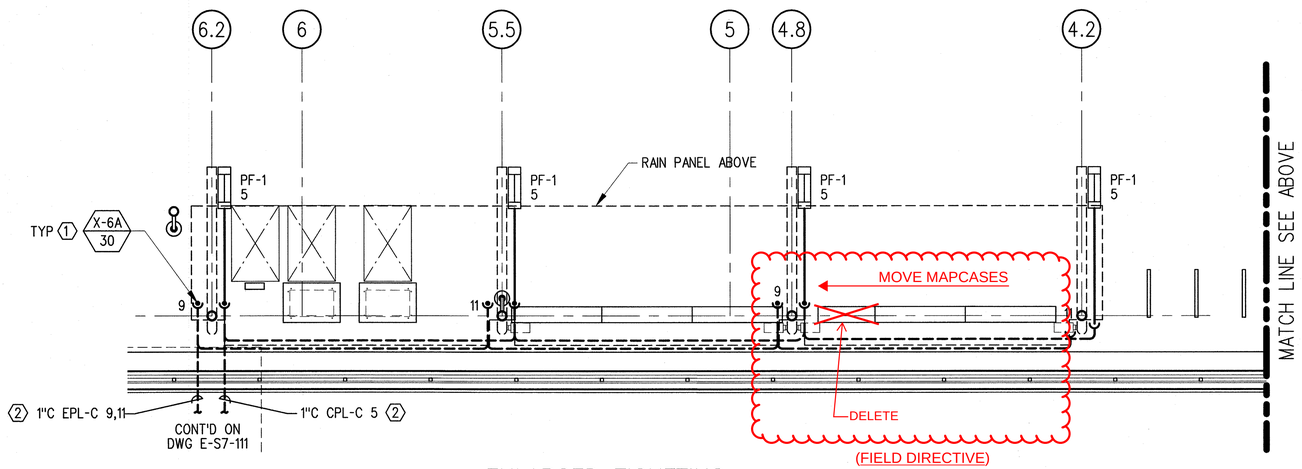

ENLARGED TICKETING
AREA #3 PLAN

1/4"=1'-0"

1
E-S7-125

4' 2' 0 4' 8'

SRJV
FEB 07 2014
ISSUED FOR CONSTRUCTION

THE PREPARATION OF THIS DRAWING HAS BEEN FINANCED BY THE TAXES OF THE CITIZENS OF LOS ANGELES COUNTY AND OF THE STATE OF CALIFORNIA.

REV	DATE	BY	APP	REG NO	EXPIRES	SEAL HOLDER	DESCRIPTION
0	1/14/14	AN	FSW	E11465	12/31/15	F. WALIEDDDINE	ECI 79

DESIGNED BY A. NALBANDIAN
DRAWN BY H. HERNANDEZ
CHECKED BY F. WALIEDDINE
IN CHARGE F. WALIEDDINE
DATE 1/14/14

REGISTERED PROFESSIONAL ENGINEER
FADI S. WALIEDDINE
No. E11465
Exp. 12-31-15
ELECTRICAL
STATE OF CALIFORNIA

Exposition Metro Line Construction Authority
Expo

EXPO SKANSKA RADOS

444 South Flower Street
Suite 2200
Los Angeles, CA 90071
TEL (213) 443-7463
FAX (213) 362-9481

PARSONS BRINCKERHOFF

CURRENT STATUS

Exposition Construction Authority
Approved for Construction
Drawings - AFC
FEB 06 2014

EXPOSITION LRT PROJECT- PHASE 2
COLORADO/4TH STREET STATION
TICKETING AREA # 3
LIGHTING-PLANS

CONTRACT NO XP8902-002
DRAWING NO E-S7-125
REV 0
SCALE 1/4" = 1'-0"
SHEET NO

C:\projectwise\pb\projectwiseinl\hernandezh\dms09028\Expo2-E-S7-125.dwg
14-Jan-14
5:07 PM
Hernandez, Hector L.

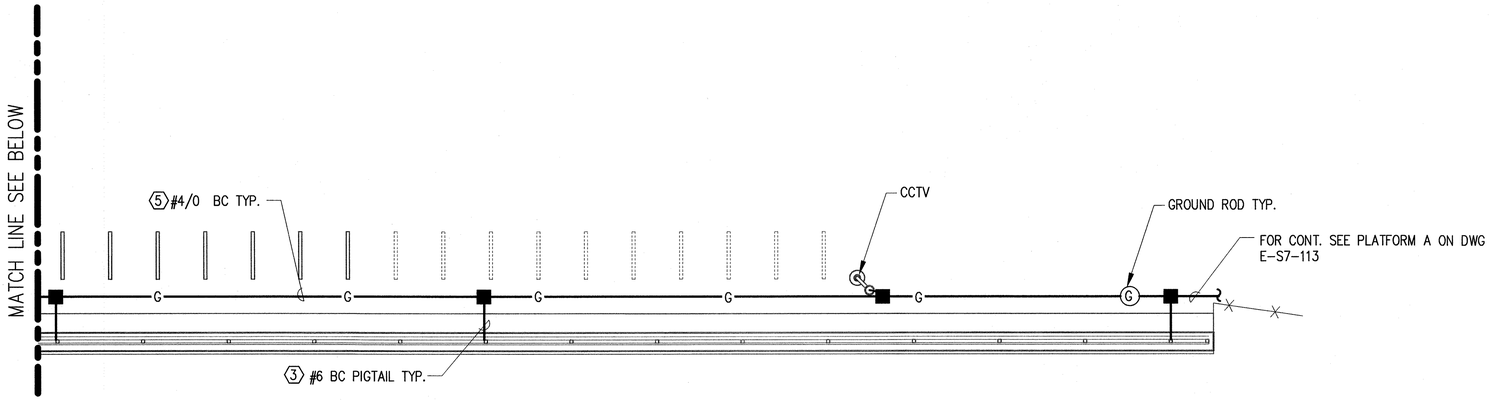

ENLARGED TICKETING AREA #3 PLAN

1/4"=1'-0"

2 / E-S7-126

NOTE:

1. FOR NOTES AND KEYNOTES SEE DRAWING E-S7-118.

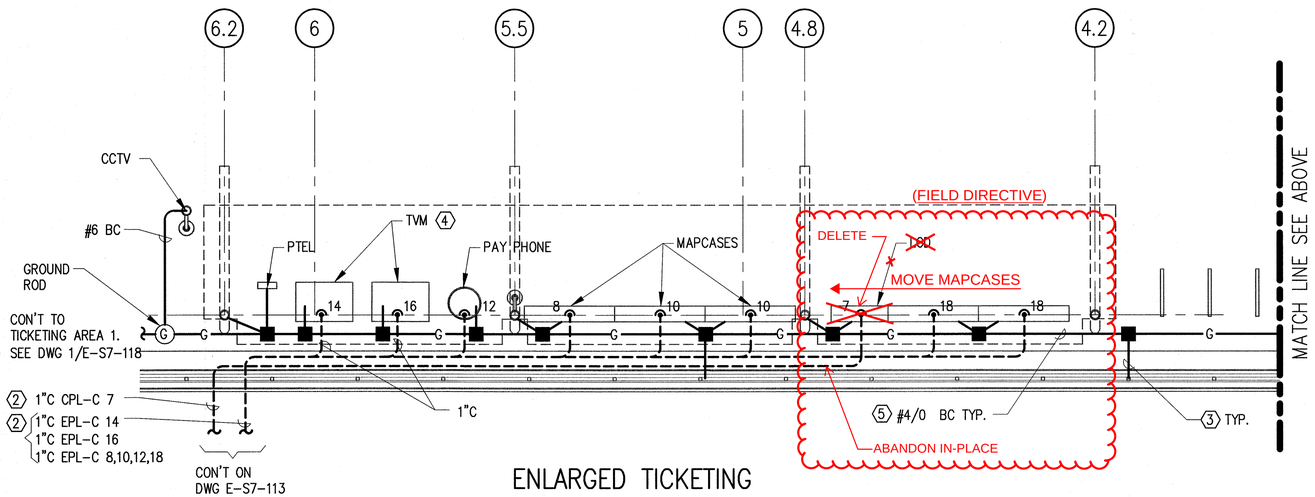

ENLARGED TICKETING AREA #3 PLAN

1/4"=1'-0"

1 / E-S7-126

4' 2' 0 4' 8'

SRJV
FEB 07 2014
ISSUED FOR CONSTRUCTION

THE PREPARATION OF THIS DRAWING HAS BEEN FINANCED BY THE TAXES OF THE CITIZENS OF LOS ANGELES COUNTY AND OF THE STATE OF CALIFORNIA.

REV	DATE	BY	APP	REG NO	EXPIRES	SEAL HOLDER	DESCRIPTION
0	1/14/14	AN	FSW	E11465	12/31/15	F. WALIEDDINE	ECI 79

DESIGNED BY A. NALBANDIAN
DRAWN BY H. HERNANDEZ
CHECKED BY F. WALIEDDINE
IN CHARGE F. WALIEDDINE
DATE 1/14/14

REGISTERED PROFESSIONAL ENGINEER — FADI S. WALIEDDINE No. E11465 Exp. 12-31-15 ELECTRICAL — STATE OF CALIFORNIA

Exposition Metro Line Construction Authority
Expo

EXPO SKANSKA RADOS

444 South Flower Street
Suite 2200
Los Angeles, CA 90071
TEL (213) 443-7463
FAX (213) 362-9481

PARSONS BRINCKERHOFF

Exposition Construction Authority
~~Approved for Construction~~
Drawings - AFC
FEB 06 2014

CURRENT STATUS

EXPOSITION LRT PROJECT– PHASE 2
COLORADO/4TH STREET STATION
TICKETING AREA # 3
POWER & GROUNDING PLAN

CONTRACT NO XP8902-002
DRAWING NO E-S7-126
REV 0
SCALE 1/4" = 1'-0"
SHEET NO

C:\projectwise\pb\projectwiseinthermandezh\dms090206\Expo2-E-S7-126.dwg
14-Jan-14 2:24 PM Hernandez, Hector L.

C:\projectwise\pb\projectwiseintheman\dcsh\dms09026\Expo2-E-S7-127.dwg

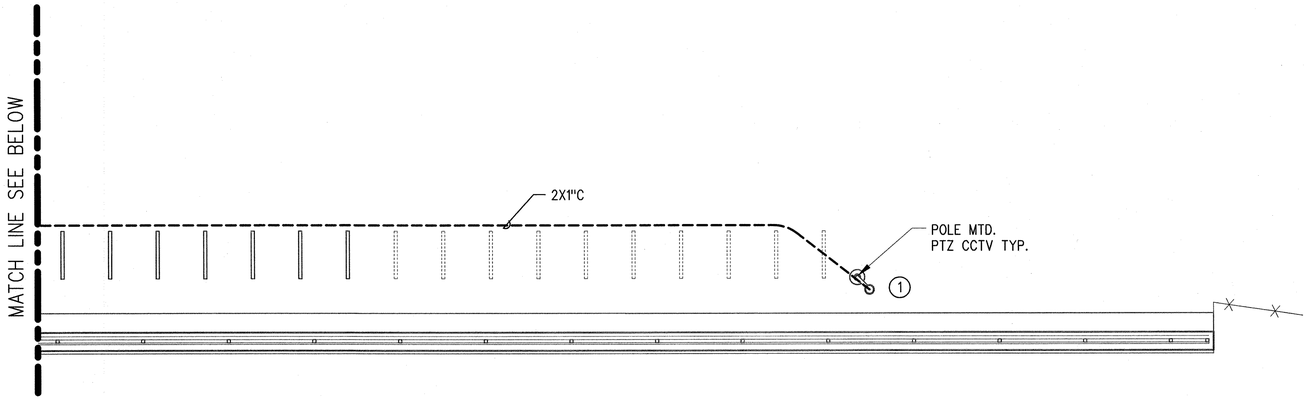

ENLARGED TICKETING
AREA #3 PLAN
1/4"=1'-0"
2
E-S7-127

KEYNOTE:

1 TO VSS CEB-3 AND VMS CEB-1 AREA-1.
FOR CONTINUATION SEE DWG. 1/E-S7-119

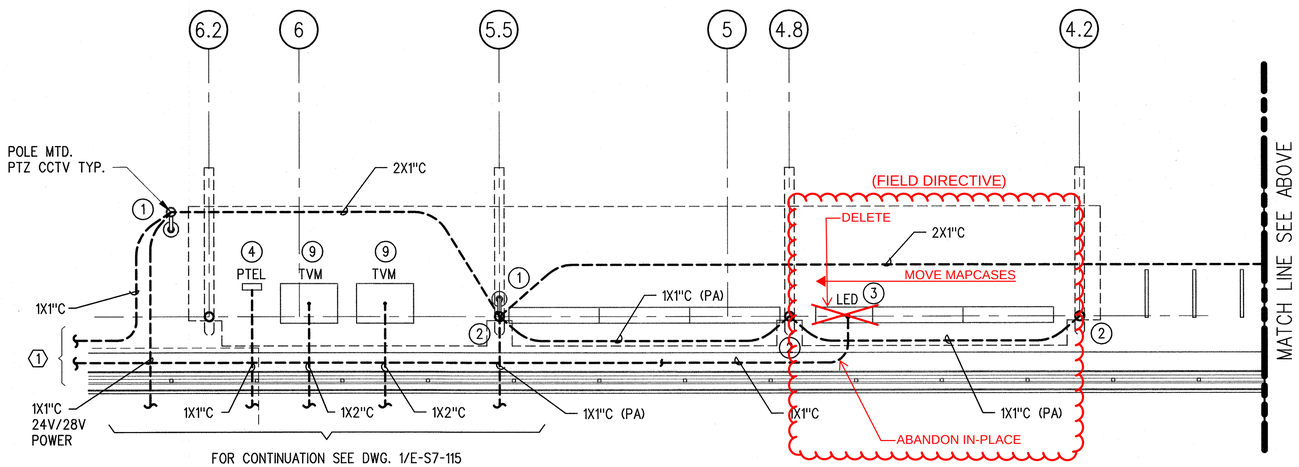

ENLARGED TICKETING
AREA #3 PLAN
1/4"=1'-0"
1
E-S7-127

SRJV
FEB 07 2014
ISSUED FOR CONSTRUCTION

THE PREPARATION OF THIS DRAWING HAS BEEN FINANCED BY THE TAXES OF THE CITIZENS OF LOS ANGELES COUNTY AND OF THE STATE OF CALIFORNIA.

REV	DATE	BY	APP	REG NO	EXPIRES	SEAL HOLDER	DESCRIPTION
0	1/14/14	AN	FSW	E11465	12/31/15	F. WALIEDDDINE	ECI 79

DESIGNED BY A. NALBANDIAN
DRAWN BY H. HERNANDEZ
CHECKED BY F. WALIEDDINE
IN CHARGE F. WALIEDDINE
DATE 1/14/14

REGISTERED PROFESSIONAL ENGINEER
FADI S. WALIEDDINE
No. E11465
Exp. 12-31-15
ELECTRICAL
STATE OF CALIFORNIA

Exposition Metro Line Construction Authority
Expo

EXPO SKANSKA RADOS

444 South Flower Street
Suite 2200
Los Angeles, CA 90071
TEL (213) 443-7463
FAX (213) 362-9481

PARSONS BRINCKERHOFF

CURRENT STATUS

Exposition Construction Authority
Approved for Construction
Drawings - AFC
FEB 06 2014

EXPOSITION LRT PROJECT- PHASE 2
COLORADO/4TH STREET STATION
TICKETING AREA # 3
COMMUNICATION PLAN

CONTRACT NO XP8902-002
DRAWING NO E-S7-127
REV 0
SCALE 1/4" = 1'-0"
SHEET NO

14-Jan-14 5:06 PM Hernandez, Hector L.

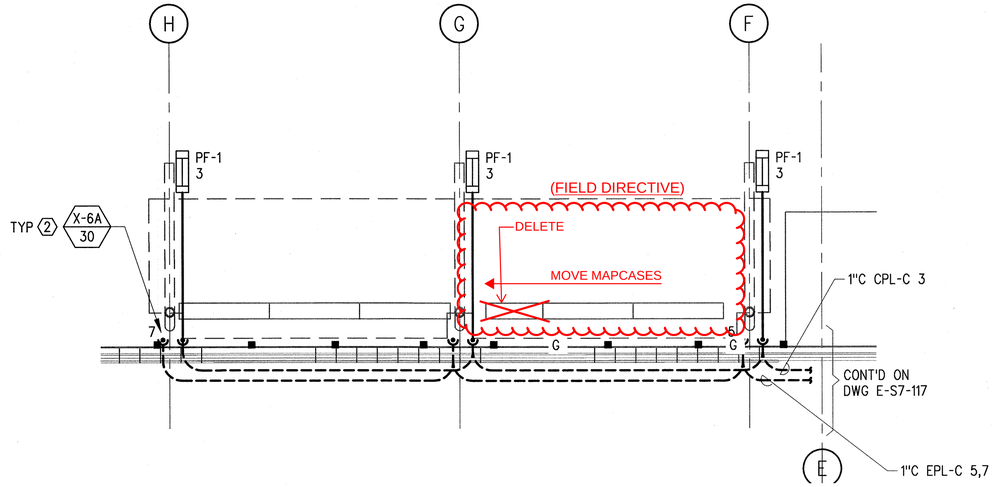

ENLARGED MAPCASE AREA LIGHTING PLAN

1/4"=1'-0" — 1 / E-S7-128

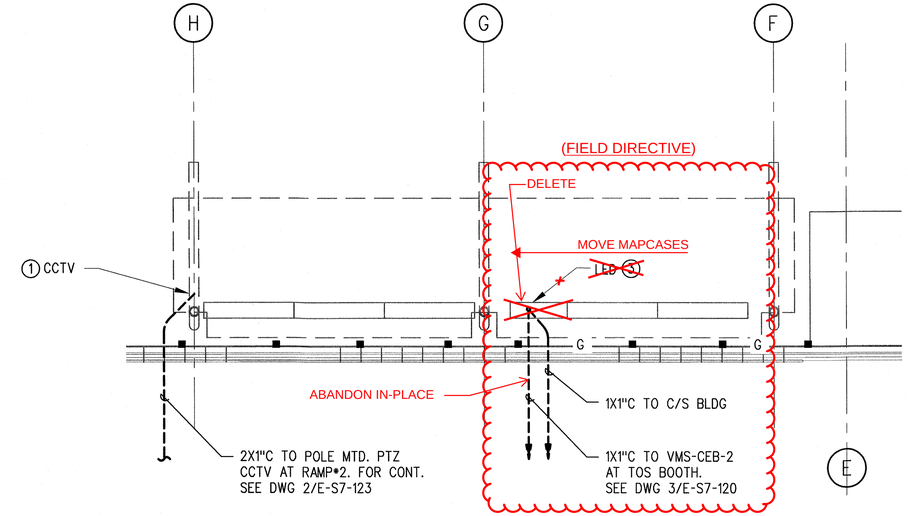

ENLARGED MAPCASE AREA COMMUNICATION PLAN

1/4"=1'-0" — 2 / E-S7-128

NOTE:

1. FOR NOTES AND KEY NOTES SEE DWG E-S7-118.

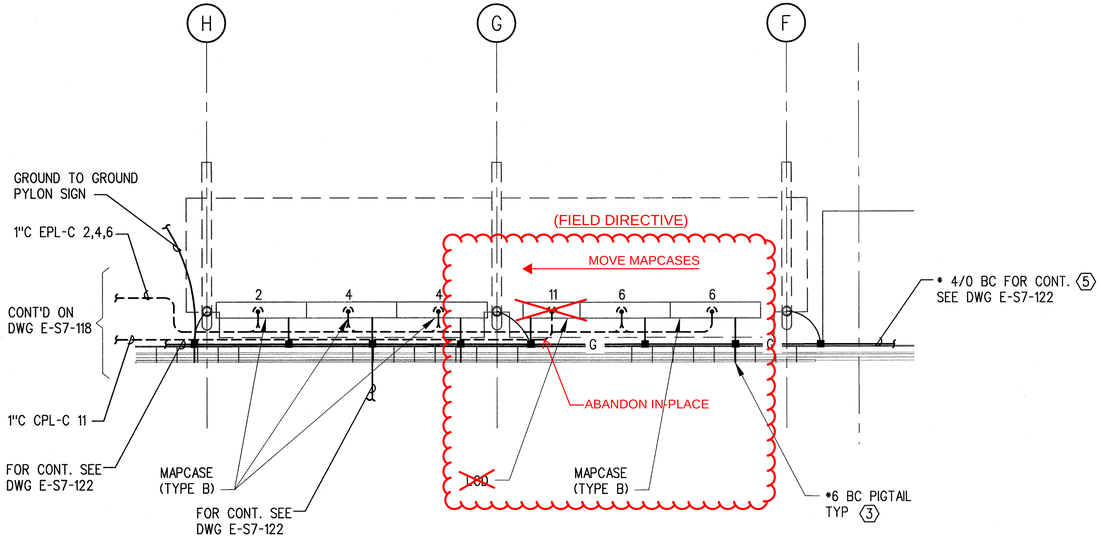

ENLARGED MAPCASE AREA POWER & GROUNDING PLAN

1/4"=1'-0" — 3 / E-S7-128

SRJV
FEB 07 2014
ISSUED FOR CONSTRUCTION

4' 2' 0 4' 8'

THE PREPARATION OF THIS DRAWING HAS BEEN FINANCED BY THE TAXES OF THE CITIZENS OF LOS ANGELES COUNTY AND OF THE STATE OF CALIFORNIA.

REV	DATE	BY	APP	REG NO	EXPIRES	SEAL HOLDER	DESCRIPTION
0	1/14/14	AN	FSW	E11465	12/31/15	F.WALIEDDINE	ECI 79

DESIGNED BY A. NALBANDIAN
DRAWN BY H. HERNANDEZ
CHECKED BY F. WALIEDDINE
IN CHARGE F. WALIEDDINE
DATE 1/14/14

REGISTERED PROFESSIONAL ENGINEER — FADI S. WALIEDDINE — No. E11465 — Exp. 12-31-15 — ELECTRICAL — STATE OF CALIFORNIA

Exposition Metro Line Construction Authority
Expo

EXPO SKANSKA RADOS

444 South Flower Street
Suite 2200
Los Angeles, CA 90071
TEL (213) 443-7463
FAX (213) 362-9481

PARSONS BRINCKERHOFF

Exposition Construction Authority
Approved for Construction
Drawings - AFC
FEB 06 2014

CURRENT STATUS

EXPOSITION LRT PROJECT- PHASE 2
COLORADO/4TH STREET STATION
PLAZA MAPCASE AREA
LIGHTING, POWER & GROUNDING
COMMUNICATION PLANS

CONTRACT NO XP8902-002
DRAWING NO E-S7-128
REV 0
SCALE 1/4" = 1'-0"
SHEET NO

C:\projectwise\pb\projectwise\thernandezh\dms09028\Expo2-E-S7-128.dwg
14-Jan-14 5:07 PM Hernandez, Hector L.

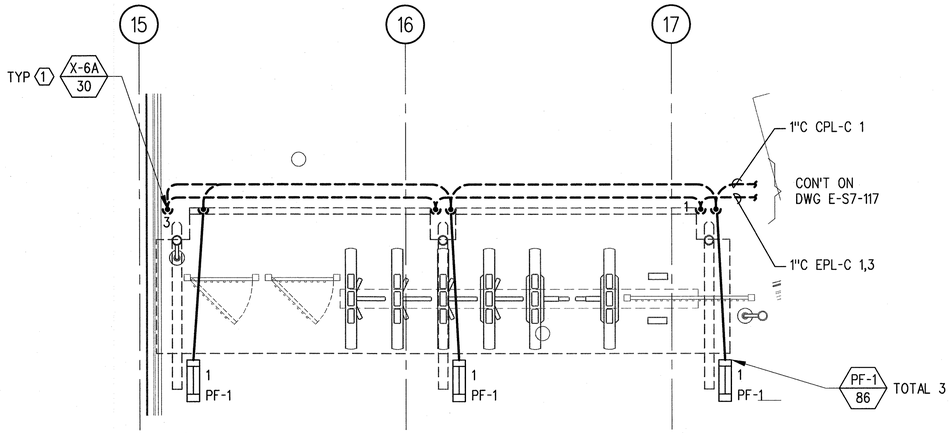

ENLARGED FARE
BARRIER LIGHTING PLAN (1) A-S7-115
1/4"=1'-0"

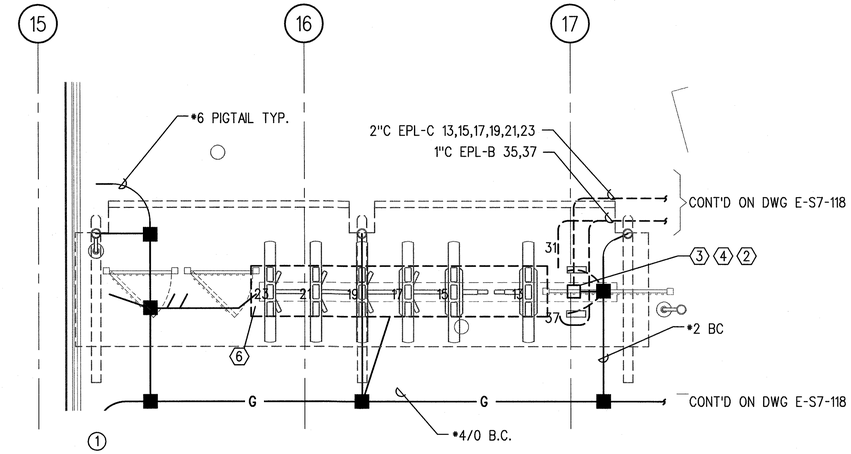

ENLARGED FARE
BARRIER POWER & GROUNDING PLAN (2) E-S7-129
1/4"=1'-0"

NOTES:

1. FOR NOTES SEE DWG'S E-S7-111, E-S7-113 AND E-S7-115.

KEYNOTES:

(1) SEE DRAWINGS E-C-014 FOR RAIN PROTECTION CANOPY LIGHTING.

(2) 6-#6 GROUND CABLE FOR TURNSTYLE COIL IN UNDERFLOOR JUNCTION BOX, LEAVE SUFFICIENT LENGHT FOR CONNECTION TO FARE GATE WITH 6' PIGTAIL FOR CONNECTION TO FUTURE EQUIPMENT.

(3) GROUND WIRE SHALL BE BONDED FROM TVM, AND FARE GATE EQUIPMENT TO GROUNDING GRID VIA #6 WIRE. TO LEAVE 6" GROUND CABLE PIGTAIL AT FUTURE TVM FOR CADWELDED CONNECTION OF 6' PIGTAIL TO TVM. COIL AND PUT CAP ON CONDUIT SO AS NOT TO PRESENT TRIP HAZARD.

(4) FARE COLLECTION JUNCTION AND PULLBOX. SEE DWG E-C-007, DETAIL D.

(5) NOT USED

(6) #2 WALKERDUCT RECESSED INTO FLOOR. SEE DWG E-C-007, DETAIL F.

(7) ROUTE CONDUITS TO COMMUNICATION BOX CEB-4 AT TOS BOOTH. SEE DWG. 3/E-S7-120.

(8) ROUTE (2) 1" GTEL CONDUITS TO C/S BLDG.

(9) ACCESS GATE SECURITY SENSOR (IDS).

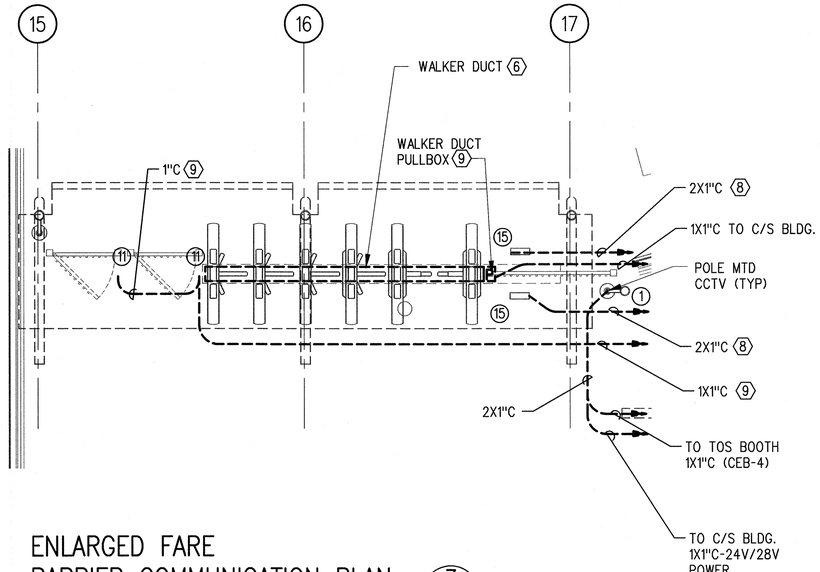

ENLARGED FARE
BARRIER COMMUNICATION PLAN (3) E-S7-129
1/4"=1'-0"

SRJV
FEB 07 2014
ISSUED FOR CONSTRUCTION

THE PREPARATION OF THIS DRAWING HAS BEEN FINANCED BY THE TAXES OF THE CITIZENS OF LOS ANGELES COUNTY AND OF THE STATE OF CALIFORNIA.

REV	DATE	BY	APP	REG NO	EXPIRES	SEAL HOLDER	DESCRIPTION
0	1/14/14	AN	FSW	E11465	12/31/15	F.WALIEDDINE	ECI 79

DESIGNED BY A. NALBANDIAN
DRAWN BY H. HERNANDEZ
CHECKED BY F. WALIEDDINE
IN CHARGE F. WALIEDDINE
DATE 1/14/14

REGISTERED PROFESSIONAL ENGINEER
FADI S. WALIEDDINE
No. E11465
Exp. 12-31-15
ELECTRICAL
STATE OF CALIFORNIA

Exposition Metro Line Construction Authority
Expo

EXPO SKANSKA RADOS

444 South Flower Street
Suite 2200
Los Angeles, CA 90071
TEL (213) 443-7463
FAX (213) 362-9481

PARSONS BRINCKERHOFF

Exposition Construction Authority
Approved for Construction
Drawings - AFC
FEB 06 2014

CURRENT STATUS

EXPOSITION LRT PROJECT- PHASE 2
COLORADO/4TH STREET STATION
PLAZA FARE BARRIER AREA
LIGHTING, POWER & GROUNDING,
COMMUNICATION PLANS

CONTRACT NO XP8902-002
DRAWING NO E-S7-129
REV 0
SCALE 1/4" = 1'-0"
SHEET NO

C:\projectwise\pb\projectwise\thermantdech\dms09\28\expo2-E-S7-129.dwg
14-Jan-14
5:08 PM
Hernandez, Hector L.

NOTE:

1. FOR NOTES AND KEY NOTES ON DWG E-S7-118

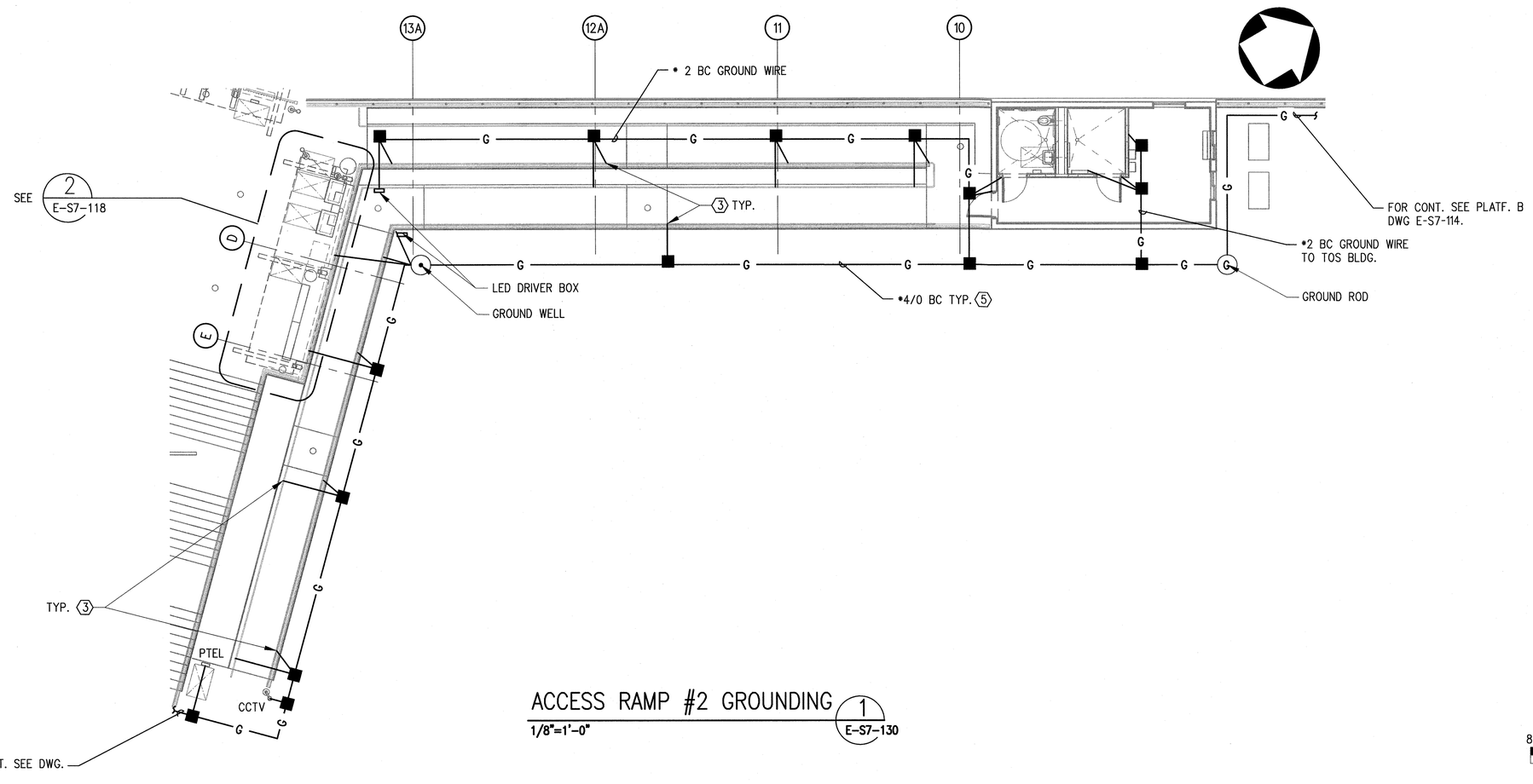

ACCESS RAMP #2 GROUNDING 1 E-S7-130

1/8"=1'-0"

SRJV
FEB 07 2014
ISSUED FOR CONSTRUCTION

8' 4' 0 8' 16'

THE PREPARATION OF THIS DRAWING HAS BEEN FINANCED BY THE TAXES OF THE CITIZENS OF LOS ANGELES COUNTY AND OF THE STATE OF CALIFORNIA.

REV	DATE	BY	APP	REG NO	EXPIRES	SEAL HOLDER	DESCRIPTION
0	1/14/14	AN	FSW	E11465	12/31/15	F. WALIEDDINE	ECI 79

DESIGNED BY A. NALBANDIAN
DRAWN BY H. HERNANDEZ
CHECKED BY F. WALIEDDINE
IN CHARGE F. WALIEDDINE
DATE 1/14/14

REGISTERED PROFESSIONAL ENGINEER
FADI S. WALIEDDINE
No. E11465
Exp. 12-31-15
ELECTRICAL
STATE OF CALIFORNIA

Exposition Metro Line Construction Authority
Expo

EXPO SKANSKA RADOS

444 South Flower Street
Suite 2200
Los Angeles, CA 90071
TEL (213) 443-7463
FAX (213) 362-9481

PARSONS BRINCKERHOFF

CURRENT STATUS

EXPOSITION LRT PROJECT- PHASE 2
COLORADO/4TH STREET STATION
ACCESS RAMPS GROUNDING PLAN

Exposition Construction Authority
Approved for Construction
Drawings - AFC
FEB 06 2014

CONTRACT NO XP8902-002
DRAWING NO E-S7-130
REV 0
SCALE 1/8" = 1'-0"
SHEET NO

C:\projectwise\pb\projectwise\entl\hernandezh\dms09028\expo2-E-S7-130.dwg
14-Jan-14 5:09 PM Hernandez, Hector L.

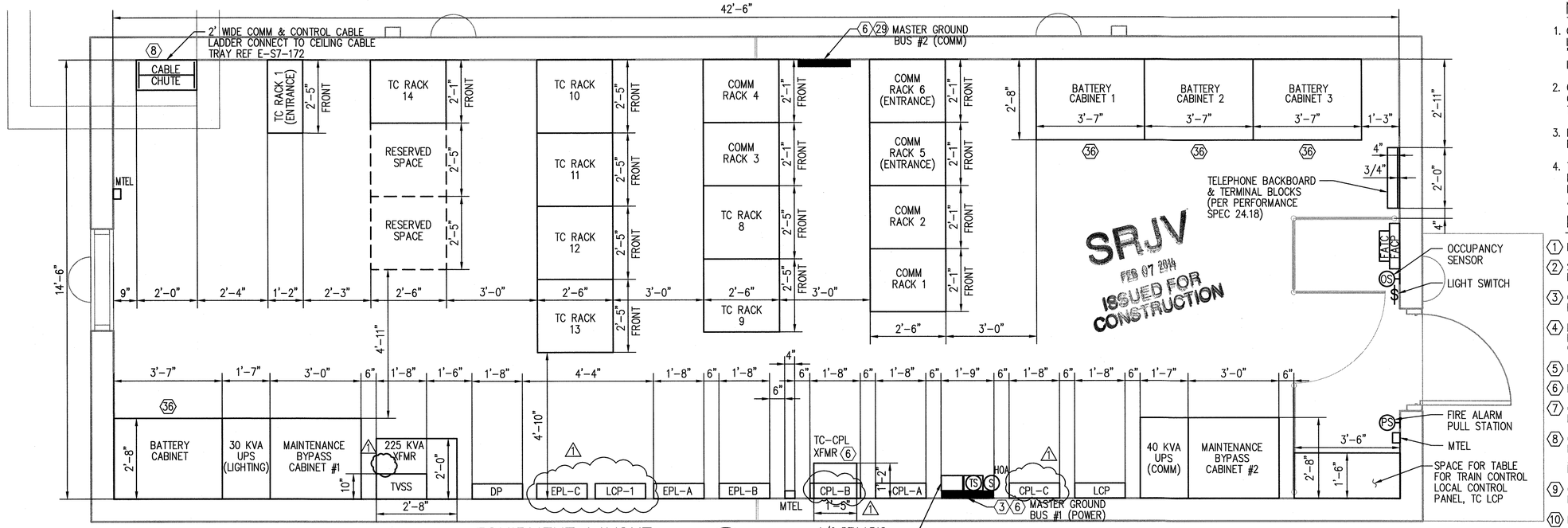

EQUIPMENT LAYOUT

1 / E-S7-170

1/2"=1'-0"

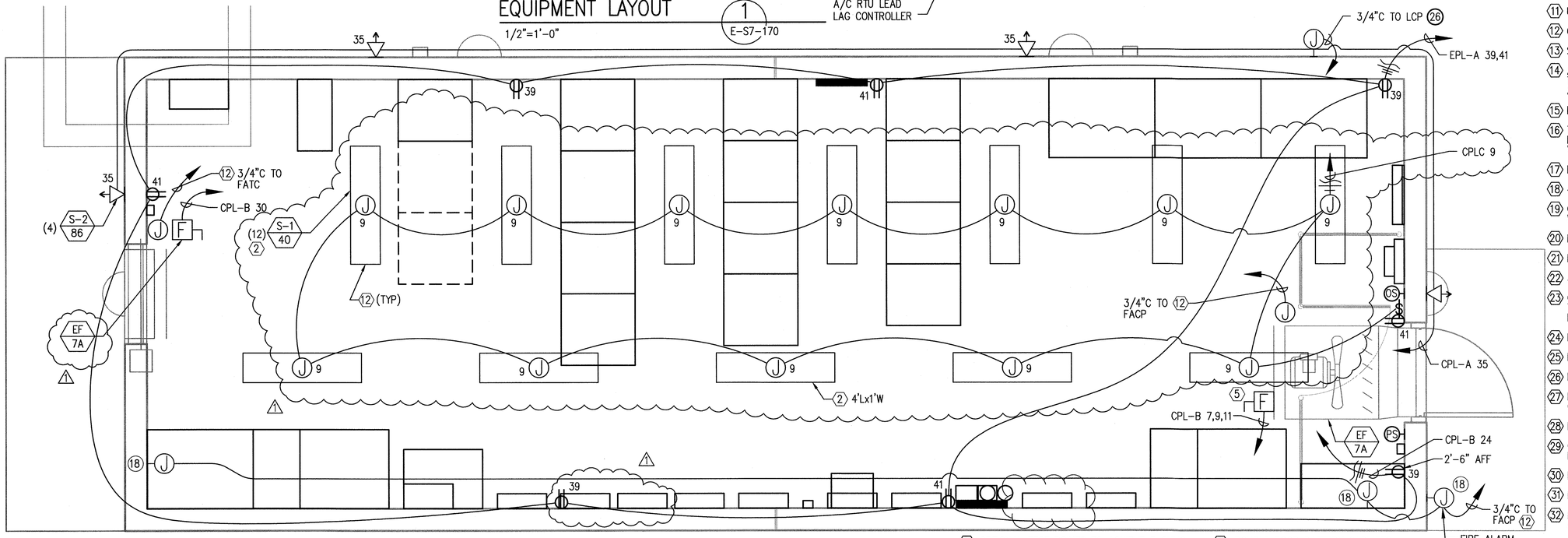

LIGHTING POWER & COMMUNICATION PLAN

2 / E-S7-170

1/2"=1'-0"

NOTES:

1. CONTRACTOR SHALL PROVIDE TO ENGINEER OF RECORD OF INSTALLATION DRAWINGS FOR ALL CONDUIT RUNS TO EOR/ "FOR INFORMATION ONLY" BEFORE THEY PROCEED WITH INSTALLATION.
2. CONDUIT AND PULL BOX LOCATIONS AS SHOWN ARE DIAGRAMMATIC ONLY ACTUAL LOCATIONS AND ROUTINGS TO BE DETERMINED IN THE FIELD BY CONTRACTOR.
3. FOR COMMUNICATION COORDINATION, SEE NOTE 33 OF GENERAL NOTES ON DRAWING E-C-001.
4. THE TOTAL GROUND RESISTANCE OF THE GROUND GRID MEASURED SHALL NOT EXCEED 5 OHMS. TO INSTALL GROUND RODS AS NEEDED TO ACHIEVE 5 OHM RESISTANCE. TEST POINTS AS SHOWN TO REMAIN.

KEYNOTES:

1. NOT USED.
2. S1 LIGHT FIXTURE ATTACHED TO CEILING OR CABLE TRAY AS NEEDED APPROX 7' AFF.
3. CONNECT POWER GROUND BUS GRID WITH #4/0 CABLE PER DWG E-C-007, DETAIL B.
4. ROUTE #2/0 GROUND CABLE IN WALL TO ROOF. GROUND METAL DECKING AND LOUVERED WALL. MAINTAIN GROUND CONTINUITY ON LOUVERED WALLS.
5. PRECISE LOCATIONS OF DISCONNECT PER MECHANICAL EQUIPMENT.
6. ITEM ELEVATED ON WALL (APPROX. 7' AFF).
7. GENERATOR GROUND CONNECTION ROD AND MGB TEST POINT PER DWG E-C-004, DETAIL D.
8. CONTRACTOR TO COORDINATE PRECISE LOCATION OF CABLE ENTRYWAY IN MANHOLE COVER TOP WITH MANHOLE VENDOR AND PRECISE LOCATION OF MANHOLE. SEE DUCTBANK DRAWING NX-201 MANHOLE TYPE 3.
9. GROUND GRID SIZE AND CONNECTIONS PER DWG E-C-004, DETAIL B.
10. DETECTORS MOUNTED ON CEILING DECK.
11. UTILITY GROUND WELL. LOCATION FOR INFORMATION ONLY.
12. CABLING BY OTHERS (COMM DESIGNER).
13. SIGNAL TEST REFERENCE GROUND PER DWG E-C-004, DETAIL D.
14. ALL COMM AND SIGNAL POWER CONDUITS, RACKS, AND TRANSFORMERS TO BE GROUNDED TO COMMS GROUND BUS. ALL PER COMM DWGS.
15. FOR CONTINUATION, SEE DUCTBANK DWG NX-3C-301.
16. TYPICAL MOUNTING HEIGHT. PRECISE CABLE TRAY MOUNTING HEIGHT, SIZE, AND POWER OUTLET LOCATION PER COMM VENDOR DWGS.
17. NOT USED.
18. 4" INCOMING CONDUIT FROM TELEPHONE UTILITY.
19. CABLE TRAY SIZE PER COMM CONTRACTOR. TO COME COMPLETE WITH SEISMIC SWAY BRACING SYSTEM.
20. NOT USED.
21. NOT USED.
22. #4/0 GROUND FOR TVSS.
23. GROUND ALL LOCAL ELECTRICALLY CONDUCTIVE MATERIAL LIKELY TO BECOME ENERGIZED (BUILDING STEEL, REBAR, AND WATER PIPING) TO SUPPLY SOURCE PER NEC ARTICLE 250.4.4.
24. NOT USED.
25. NOT USED.
26. PHOTOCELL FOR STATION LIGHTING CONTROL 10' AFF. FACE NORTH.
27. ROUTE COMM CABLES AND POWER CABLES ON SEPARATE SIDES OF MANHOLE.
28. NOT USED.
29. CONNECT COMM GROUND BUS WITH #4/0 CABLE PER DWG E-C-007, DETAIL A.
30. NOT USED.
31. NOT USED.
32. RUN BOUNDING JUMPER BETWEEN C/S BUILDING AND PLATFORM A AND B GROUNDING NETWORKS.
33. OPTIONAL TEST POINTS TO ACHIEVE 5 OHMS.
34. TO WAYSIDE CASES.
35. CONNECT TO MANHOLE GROUND.
36. DOUBLE DOOR BATTERY CABINETS, BATTERY DRAW-OUT SPACE 2'-8".

THE PREPARATION OF THIS DRAWING HAS BEEN FINANCED BY THE TAXES OF THE CITIZENS OF LOS ANGELES COUNTY AND OF THE STATE OF CALIFORNIA.

REV	DATE	BY	APP	REG NO	EXPIRES	SEAL HOLDER	DESCRIPTION
1	1/14/14	AN	FSW	E11465	12/31/15	F. WALIEDDINE	ECI 79
0	6/5/13	AN	FSW	E11465	12/31/13	F. WALIEDDINE	APPROVED FOR CONSTRUCTION

DESIGNED BY A. NALBANDIAN
DRAWN BY H. HERNANDEZ
CHECKED BY F. WALIEDDINE
IN CHARGE F. WALIEDDINE
DATE 6/5/13

REGISTERED PROFESSIONAL ENGINEER — FADI S. WALIEDDINE — No. E11465 — Exp. 12-31-15 — ELECTRICAL — STATE OF CALIFORNIA

Exposition Metro Line Construction Authority
Expo

Exposition Construction Authority Approved for Construction Drawings - APC FEB 06 2014

EXPO SKANSKA RADOS

444 South Flower Street
Suite 2200
Los Angeles, CA 90071
TEL (213) 443-7463
FAX (213) 362-9481

PARSONS BRINCKERHOFF

CURRENT STATUS

EXPOSITION LRT PROJECT- PHASE 2
COLORADO/4TH STREET STATION
COMMUNICATION/SIGNAL BUILDING
CABLE TRAY LAYOUT, ELEVATION, AND RACK POWER PLAN

CONTRACT NO XP8902-002
DRAWING NO E-S7-170
REV 1
SCALE 1/2" = 1'-0"
SHEET NO

C:\projectwise\pbprojectwise\thermandez\hdms09028\exp02-E-S7-170.dwg
14-Jan-14 2:35 PM Hernandez, Hector L.

NOTE:

1. FOR NOTES AND KEYNOTES, SEE DWG E-S7-170.

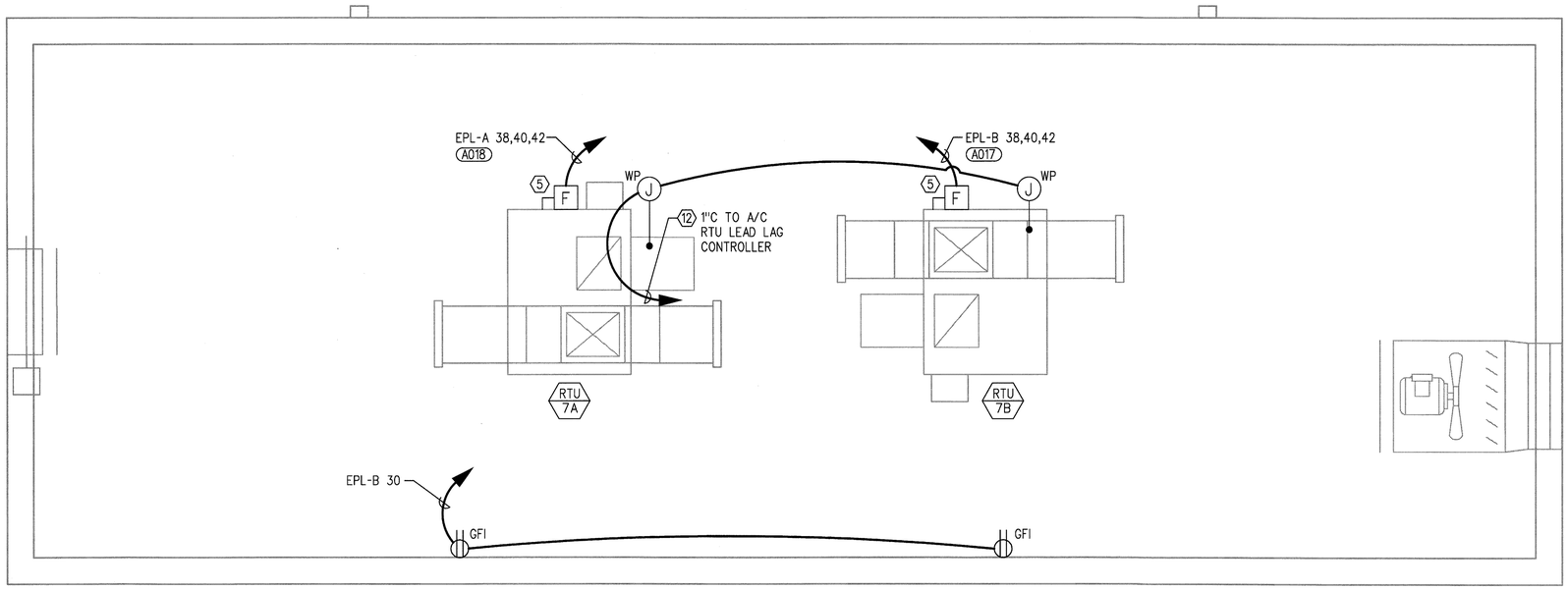

ROOF POWER PLAN 1

1/2"=1'-0" E-S7-171

SRJV
JUN 24 2013
ISSUED FOR CONSTRUCTION

THE PREPARATION OF THIS DRAWING HAS BEEN FINANCED BY THE TAXES OF THE CITIZENS OF LOS ANGELES COUNTY AND OF THE STATE OF CALIFORNIA.

REV	DATE	BY	APP	REG NO	EXPIRES	SEAL HOLDER	DESCRIPTION
0	5/30/13	AN	FSW	E11465	12/31/13	F. WALIEDDINE	APPROVED FOR CONSTRUCTION

DESIGNED BY A .NALBANDIAN
DRAWN BY H. HERNANDEZ
CHECKED BY F. WALIEDDINE
IN CHARGE F. WALIEDDINE
DATE 5/30/13

REGISTERED PROFESSIONAL ENGINEER
FADI S. WALIEDDINE
No. E11465
Exp. 12-31-13
ELECTRICAL
STATE OF CALIFORNIA

Exposition Metro Line Construction Authority
Expo
Exposition Construction Authority
Approved for Construction
Drawings - AFC
JUN 21 2013

EXPO SKANSKA RADOS

444 South Flower Street
Suite 2200
Los Angeles, CA 90071
TEL (213) 443-7463
FAX (213) 362-9481

PARSONS BRINCKERHOFF

CURRENT STATUS

EXPOSITION LRT PROJECT- PHASE 2
COLORADO/4TH STREET STATION
COMMUNICATION/SIGNAL BUILDING
UNDERGROUND CONDUIT PLAN

CONTRACT NO XP8902-002
DRAWING NO E-S7-171
REV 0
SCALE 1/2" = 1'-0"
SHEET NO

C:\Expo2\electlexpo2-E-S7-171.dwg
31-May-13 10:31 AM Rodriguez, Dennis

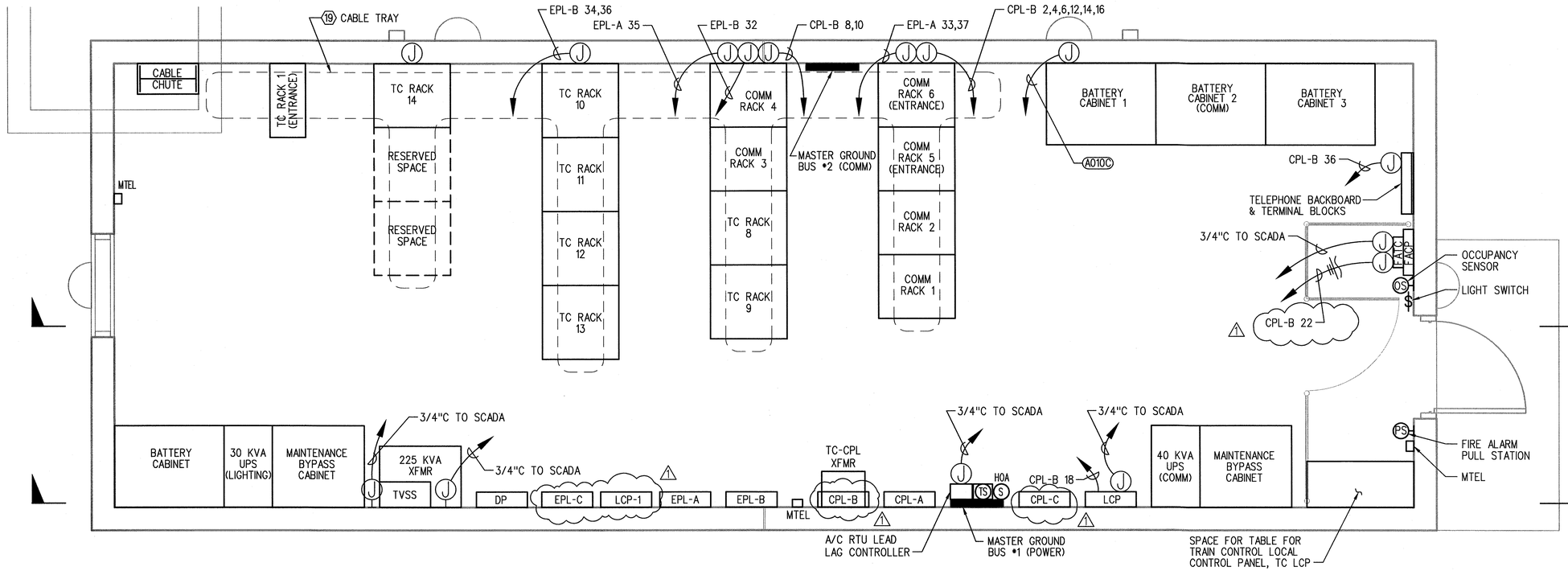

NOTE:

1. SEE DWG E-S7-170 FOR NOTES AND KEYNOTES.

CABLE TRAY LAYOUT & RACK POWER PLAN

1/2"=1'-0" — 1 E-S7-172

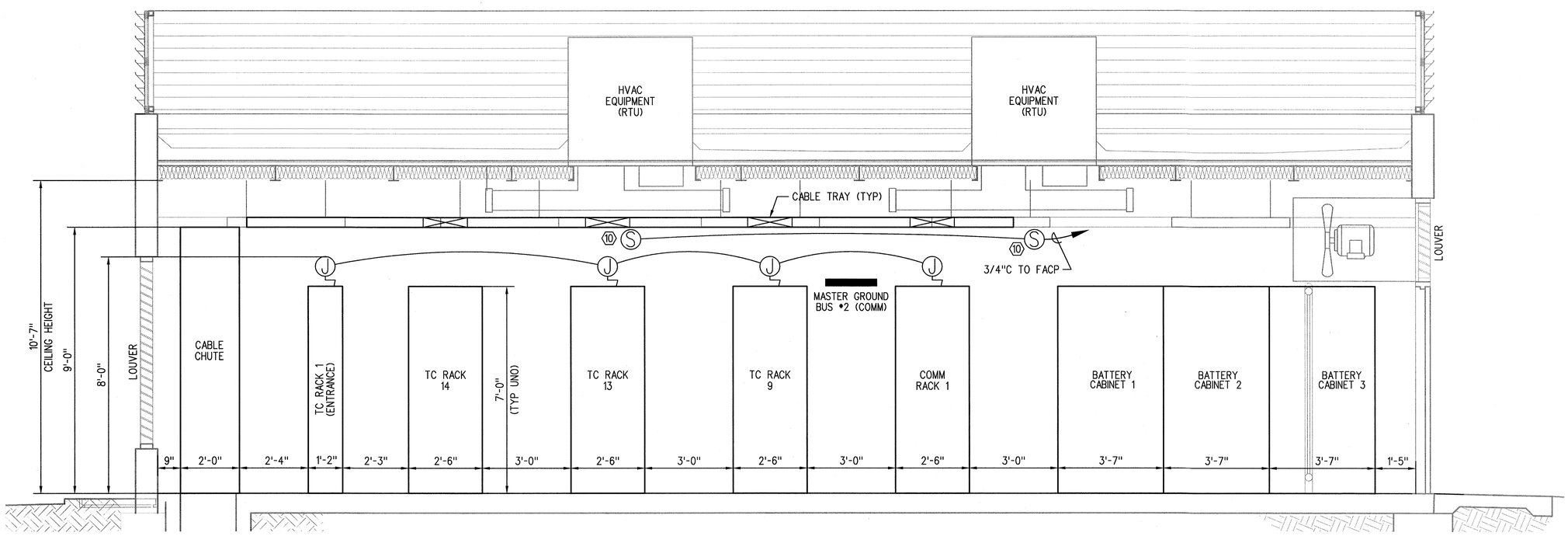

ELEVATION

1/2"=1'-0" — 1 E-S7-172

SRJV
FEB 07 2014
ISSUED FOR CONSTRUCTION

THE PREPARATION OF THIS DRAWING HAS BEEN FINANCED BY THE TAXES OF THE CITIZENS OF LOS ANGELES COUNTY AND OF THE STATE OF CALIFORNIA.

REV	DATE	BY	APP	REG NO	EXPIRES	SEAL HOLDER	DESCRIPTION
1	1/14/14	AN	FSW	E11465	12/31/15	F. WALIEDDINE	ECI 79
0	6/5/13	AN	FSW	E11465	12/31/13	F. WALIEDDINE	APPROVED FOR CONSTRUCTION

DESIGNED BY A. NALBANDIAN
DRAWN BY H. HERNANDEZ
CHECKED BY F. WALIEDDINE
IN CHARGE F. WALIEDDINE
DATE 6/5/13

REGISTERED PROFESSIONAL ENGINEER — FADI S. WALIEDDINE — No. E11465 — Exp. 12-31-15 — ELECTRICAL — STATE OF CALIFORNIA

Exposition Metro Line Construction Authority
Expo

Exposition Construction Authority
Approved for Construction
Drawings - APC
FEB 06 2014

EXPO SKANSKA RADOS

444 South Flower Street
Suite 2200
Los Angeles, CA 90071
TEL (213) 443-7463
FAX (213) 362-9481

PARSONS BRINCKERHOFF

CURRENT STATUS

EXPOSITION LRT PROJECT- PHASE 2
COLORADO/4TH STREET STATION
COMMUNICATION/SIGNAL BUILDING
CABLE TRAY LAYOUT, ELEVATION, AND RACK POWER PLAN

CONTRACT NO XP8902-002
DRAWING NO E-S7-172
REV 1
SCALE 1/2" = 1'-0"
SHEET NO

C:\projectwise\pb\projectwise\thermanbeth\ms\09028\expo2-E-S7-172.dwg
14-Jan-14 5:22 PM Hernandez, Hector L.

NOTE:

1. SEE SHEET E-S7-170 FOR NOTES AND KEYNOTES.

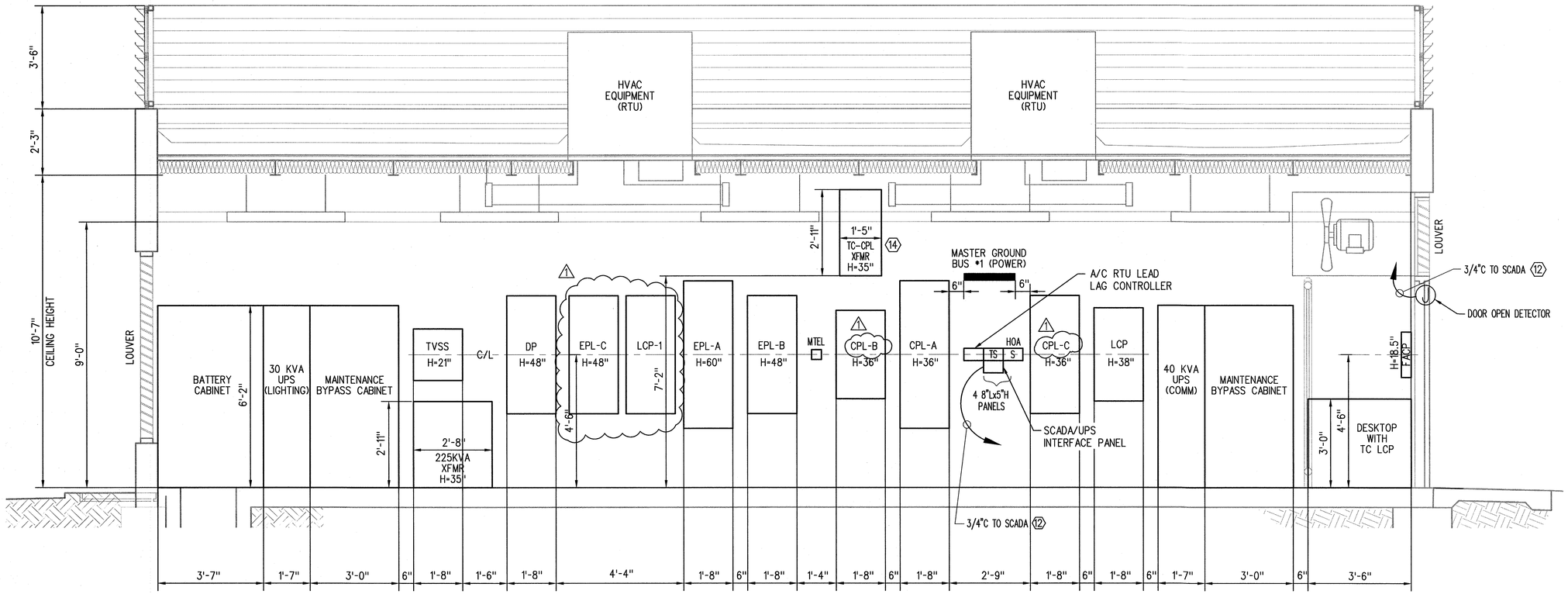

ELEVATION 2
1/2"=1'-0"
E-S7-173 E-S7-172

SRJV
FEB 07 2014
ISSUED FOR CONSTRUCTION

THE PREPARATION OF THIS DRAWING HAS BEEN FINANCED BY THE TAXES OF THE CITIZENS OF LOS ANGELES COUNTY AND OF THE STATE OF CALIFORNIA.

REV	DATE	BY	APP	REG NO	EXPIRES	SEAL HOLDER	DESCRIPTION
1	1/14/14	AN	FSW	E11465	12/31/15	F. WALIEDDINE	ECI 79
0	6/5/13	AN	FSW	E11465	12/31/13	F. WALIEDDINE	APPROVED FOR CONSTRUCTION

DESIGNED BY A. NALBANDIAN
DRAWN BY H. HERNANDEZ
CHECKED BY F. WALIEDDINE
IN CHARGE F. WALIEDDINE
DATE 6/5/13

REGISTERED PROFESSIONAL ENGINEER
FADI S. WALIEDDINE
No. E11465
Exp. 12-31-15
ELECTRICAL
STATE OF CALIFORNIA

Exposition Metro Line Construction Authority
Expo

Exposition Construction Authority
Approved for Construction
~~Drawings - AFC~~
FEB 06 2014

EXPO SKANSKA RADOS

444 South Flower Street
Suite 2200
Los Angeles, CA 90071
TEL (213) 443-7463
FAX (213) 362-9481

PARSONS BRINCKERHOFF

CURRENT STATUS

EXPOSITION LRT PROJECT- PHASE 2
COLORADO/4TH STREET STATION
COMMUNICATION/SIGNAL BUILDING
CABLE TRAY LAYOUT, ELEVATION, AND RACK POWER PLAN

CONTRACT NO XP8902-002
DRAWING NO E-S7-173
REV 1
SCALE 1/2" = 1'-0"
SHEET NO

C:\projectwise\pb\projectwiseint\hernandezh\dms09028\exp02-E-S7-173.dwg
Hernandez, Hector L. 14-Jan-14 5:10 PM

C:\projectwise\pb\projectwise\intthermantdezh\ms09028\exp2-E-S7-174.dwg

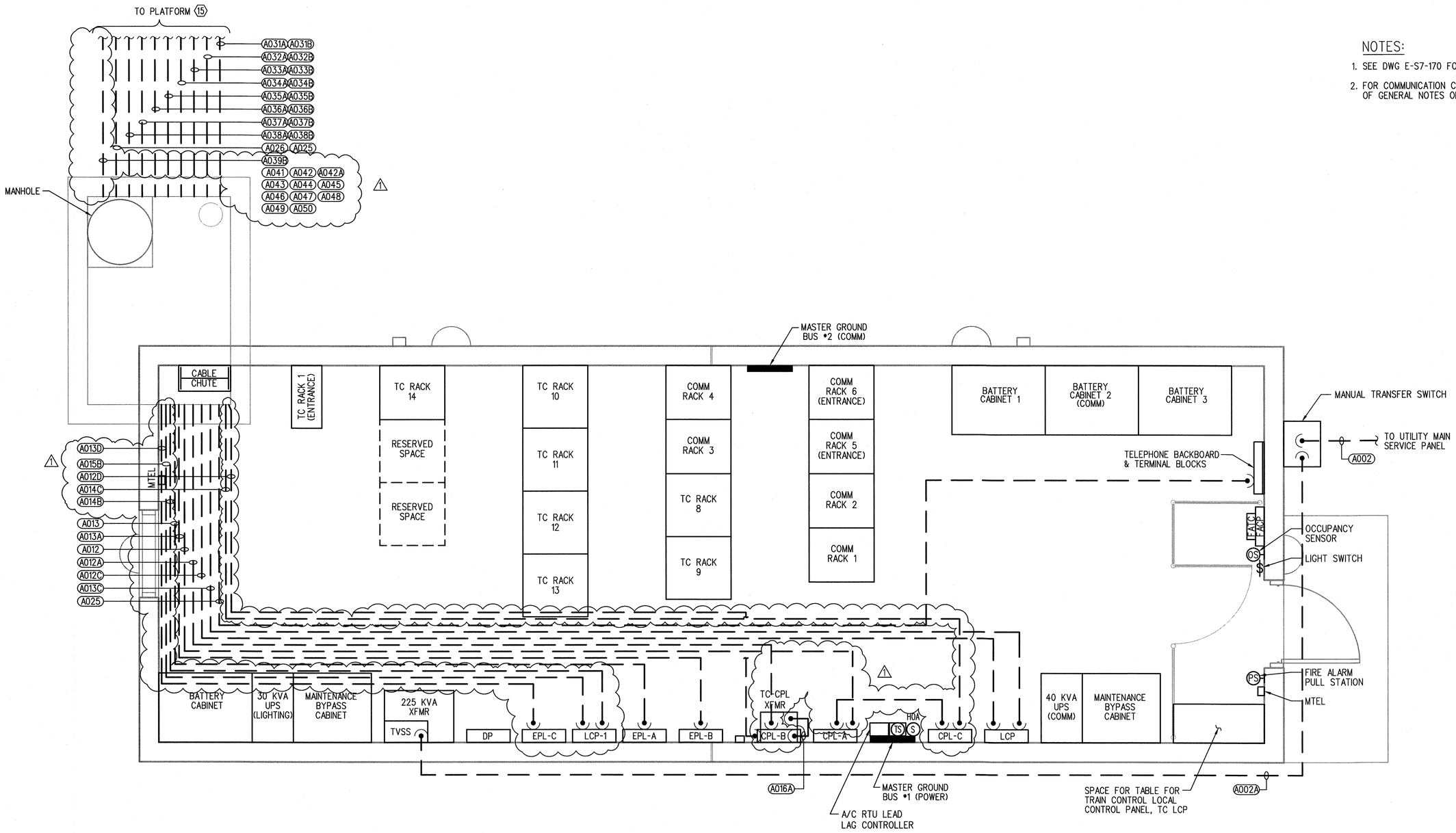

UNDERGROUND CONDUIT PLAN (1 / E-S7-174)

1/2"=1'-0"

NOTES:

1. SEE DWG E-S7-170 FOR NOTES AND KEYNOTES.
2. FOR COMMUNICATION COORDINATION, SEE NOTE 33 OF GENERAL NOTES ON DWG E-C-001.

SRJV
FEB 07 2014
ISSUED FOR CONSTRUCTION

THE PREPARATION OF THIS DRAWING HAS BEEN FINANCED BY THE TAXES OF THE CITIZENS OF LOS ANGELES COUNTY AND OF THE STATE OF CALIFORNIA.

REV	DATE	BY	APP	REG NO	EXPIRES	SEAL HOLDER	DESCRIPTION
1	1/14/14	AN	FSW	E11465	12/31/15	F. WALIEDDINE	ECI 79
0	6/5/13	AN	FSW	E11465	12/31/13	F. WALIEDDINE	APPROVED FOR CONSTRUCTION

DESIGNED BY A. NALBANDIAN
DRAWN BY H. HERNANDEZ
CHECKED BY F. WALIEDDINE
IN CHARGE F. WALIEDDINE
DATE 6/5/13

REGISTERED PROFESSIONAL ENGINEER — FADI S. WALIEDDINE — No. E11465 — Exp. 12-31-15 — ELECTRICAL — STATE OF CALIFORNIA

Exposition Metro Line Construction Authority
Expo

EXPO SKANSKA RADOS

444 South Flower Street
Suite 2200
Los Angeles, CA 90071
TEL (213) 443-7463
FAX (213) 362-9481

PARSONS BRINCKERHOFF

Exposition Construction Authority
Approved for Construction
Drawings - AFC
CURRENT STATUS
FEB 06 2014

EXPOSITION LRT PROJECT- PHASE 2
COLORADO/4TH STREET STATION
COMMUNICATION/SIGNAL BUILDING
UNDERGROUND CONDUIT PLAN

CONTRACT NO XP8902-002
DRAWING NO E-S7-174
REV 1
SCALE 1/2" = 1'-0"
SHEET NO

Hernandez, Hector L. 5:10 PM 14-Jan-14

PERFORMANCE CERTIFICATE OF COMPLIANCE (Part 1 of 3) PERF-1C

Project Name			Date
Train Operator Booth. (Env/Lighting/HVAC)			5/29/2013
Project Address	Climate Zone	Total Cond. Floor Area	Addition Floor Area
Colorado @ 4th Street Santa Monica	CA Climate Zone 06	435	n/a

GENERAL INFORMATION

Building Type: ☑ Nonresidential ☐ High-Rise Residential ☐ Hotel/Motel Guest Room
☐ Relocatable - indicate ☐ specific climate zone ☐ all climates

Phase of Construction: ☑ New Construction ☐ Addition ☐ Alteration

STATEMENT OF COMPLIANCE

This certificate of compliance lists the building features and specifications needed to comply with Title 24, Parts 1 and 6 of the California Code of Regulations. This certificate applies only to a Building using the performance compliance approach.

CABEC 858-67-1429 FAX 858-67-9575 **Mark Madison** CERTIFIED ENERGY PLANS EXAMINER 2013 1st & 2nd Building Efficiency Standards

The documentation author hereby certifies that the documentation is accurate and complete.

Documentation Author

Name	Mark Madison	Signature	Mark Madison
Company	ENERGY CODE WORKS	Date	5/29/2013
Address	2600 Michelson Drive Suite #1700	Phone	(949) 240-1867
City/State/Zip	Irvine, Ca 92612		

The Principal Designer hereby certifies that the proposed building design represented in this set of construction documents is consistent with the other compliance forms and worksheets, with the specifications, and with any other calculations submitted with this permit application. The proposed building has been designed to meet the energy efficiency requirements contained in sections 110, 116 through 118, and 140 through 149 of Title 24, Part 6. Please check one:

ENV.	LTG.	MECH.	
☑	☑	☑	I hereby affirm that I am eligible under the provisions of Division 3 of the Business and Professions Code to sign this document as the person responsible for its preparation; and that I am licensed in the State of California as a civil engineer, mechanical engineer, electrical engineer, or I am a licensed architect.
☐	☐	☐	I affirm that I am eligible under the provisions of Division 3 of the Business and Professions Code by section 5537.2 or 6737.3 to sign this document as the person responsible for its preparation; and that I am a licensed contractor performing this work.
☐	☐	☐	I affirm that I am eligible under Division 3 of the Business and Professions Code to sign this document because it pertains to a structure or type of work described as exempt pursuant to Business and Professions Code Sections 5537, 5538 and 6737.1.

Principal Envelope Designer

Name	John Trautmann	Signature x	
Company	Parsons Brinckerhoff	Date	29 MAY 2013
Address	444 South Flower Street #800	License #	C21914
City/State/Zip	Los Angeles, Ca 90071	Phone	(213) 362-9470

Principal Mechanical Designer

Name	Ron Goley	Signature x	
Company	Parsons Brinckerhoff	Date	29 MAY 2013
Address	444 South Flower Street #800	License #	M33848
City/State/Zip	Los Angeles, Ca 90071	Phone	(213) 362-9470

Principal Lighting Designer

Name	Fadi Walieddine	Signature x	
Company	Parsons Brinckerhoff	Date	29 MAY 2013
Address	444 South Flower Street #800	License #	E11465
City/State/Zip	Los Angeles, Ca 90071	Phone	(213) 362-9470

INSTRUCTIONS TO APPLICANT COMPLIANCE & WORKSHEETS (check box if worksheets are included)

☑	ENV-1C	Certificate of Compliance. Required on plans.	☑	MECH-1C	Certificate of Compliance. Required on plans.
☑	LTG-1C	Certificate of Compliance. Required on plans.	☑	MECH-2C	Air/Water Side/Service Hot Water & Pool Requirements.
☐	LTG-2C	Lighting Controls Credit Worksheet.	☑	MECH-3C	Mechanical Ventilation and Reheat.
☐	LTG-3C	Indoor Lighting Power Allowance.	☑	MECH-5C	Mechanical Equipment Details.

PERFORMANCE CERTIFICATE OF COMPLIANCE (Part 2 of 3) PERF-1C

Project Name: Train Operator Booth. (Env/Lighting/HVAC) — Date: 5/29/2013

ANNUAL TDV ENERGY USE SUMMARY (kBtu/sqft-yr)

Energy Component	Standard Design	Proposed Design	Compliance Margin
Space Heating	20.06	15.69	4.37
Space Cooling	93.11	71.50	21.61
Indoor Fans	188.61	155.13	33.48
Heat Rejection	0.00	0.00	0.00
Pumps & Misc.	0.00	0.00	0.00
Domestic Hot Water	0.00	0.00	0.00
Lighting	59.53	51.54	7.98
Receptacle	86.33	86.33	0.00
Process	0.00	0.00	0.00
Process Lighting	0.00	0.00	0.00
TOTALS	447.64	380.19	67.45
Percent better than Standard		15.1 %	(15.1 % excluding process)

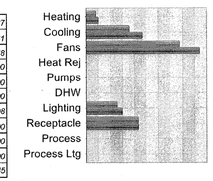

BUILDING COMPLIES

GENERAL INFORMATION

Building Orientation	(SW) 225 deg	Conditioned Floor Area	435	sqft.
Number of Stories	1	Unconditioned Floor Area	0	sqft.
Number of Systems	1	Conditioned Footprint Area	435	sqft.
Number of Zones	1	Natural Gas Available On Site	Yes	

	Orientation	Gross Area	Glazing Area	Glazing Ratio
Front Elevation	(SW)	160 sqft.	0 sqft.	0.0 %
Left Elevation	(NW)	250 sqft.	8 sqft.	3.2 %
Rear Elevation	(NE)	160 sqft.	32 sqft.	20.0 %
Right Elevation	(SE)	250 sqft.	0 sqft.	0.0 %
Total		820 sqft.	40 sqft.	4.9 %
Roof		435 sqft.	0 sqft.	0.0 %

	Standard	Proposed
Prescriptive Lighting Power Density	0.850 W/sqft.	0.736 W/sqft.
Prescriptive Envelope TDV Energy	8,507	9,562

Prescriptive Values for Comparison only. See LTG-1C for allowed LPD.

Remarks:

PERFORMANCE CERTIFICATE OF COMPLIANCE (Part 3 of 3) PERF-1C

Project Name: Train Operator Booth. (Env/Lighting/HVAC) — Date: 5/29/2013

ZONE INFORMATION

System Name	Zone Name	Occupancy Type	Floor Area (sqft.)	Inst. LPD (W/sf)[1]	Ctrl. Credits (W/sf)[2]	Allowed LPD Area (W/sf)[3]	Allowed LPD Tailored (W/sf)[4]	Proc. Loads (W/sf)
PTHP-1 Unit	Train Operators Booth	Comp Bldg Office	435	0.736				

Notes: 1. See LTG-1C (items marked with asterisk, see LTG-1-C by others) 2. See LTG-2C 3. See LTG-3C (by others) 4. See LTG-4C — Items above require special documentation

EXCEPTIONAL CONDITIONS COMPLIANCE CHECKLIST

The local enforcement agency should pay special attention to the items specified in this checklist. These items require special written justification and documentation, and special verification to be used with the performance approach. The local enforcement agency determines the adequacy of the justifications, and may reject a building or design that otherwise complies based on the adequacy of the special justification and documentation submitted.

The exceptional features listed in this performance approach application have specifically been reviewed. Adequate written justification and documentation for their use have been provided by the applicant.

Authorized Signature or Stamp _____

SRJV JUN 24 2013 ISSUED FOR CONSTRUCTION

THE PREPARATION OF THIS DRAWING HAS BEEN FINANCED BY THE TAXES OF THE CITIZENS OF LOS ANGELES COUNTY AND OF THE STATE OF CALIFORNIA.

REV	DATE	BY	APP	REG NO	EXPIRES	SEAL HOLDER	DESCRIPTION
0	5/30/13	CS					APPROVED FOR CONSTRUCTION

DESIGNED BY J. TRAUTMANN
DRAWN BY C. SUERO
CHECKED BY J. JACOBSEN
IN CHARGE P. TUCCILLO
DATE 5/30/13

LICENSED ARCHITECT JOHN P. TRAUTMANN No. C21914 Exp. 06-31-13 ARCHITECTURAL STATE OF CALIFORNIA

Exposition Metro Line Construction Authority
Expo
Exposition Construction Authority Approved for Construction Drawings - AFC
EXPO SKANSKA RADOS
444 South Flower Street Suite 2200 Los Angeles, CA 90071 TEL (213) 443-7463 FAX (213) 362-9481
PARSONS BRINCKERHOFF
JUN 21 2013
CURRENT STATUS

EXPOSITION LRT PROJECT- PHASE 2
COLORADO/ 4TH ST STATION
TITLE 24
TOS BOOTH ENV/HVAC/LIGHTING CALCS
SHEET 1 OF 6

CONTRACT NO XP8902-002
DRAWING NO ET-S7-001 REV 0
SCALE NONE
SHEET NO

C:\projectwiseip\projectwiseintlsuero\dms65339\expo2-ET-S7-001.dwg
Suero, Carmen 11:19 AM 18-Jun-13

CERTIFICATE OF COMPLIANCE AND FIELD INSPECTION ENERGY CHECKLIST (Part 1 of 3) ENV-1C

Project Name			Date
Train Operator Booth. (Env/Lighting/HVAC)			*5/29/2013*
Project Address	Climate Zone	Total Cond. Floor Area	Addition Floor Area
Colorado @ 4th Street Santa Monica	*6*	*435*	*n/a*

GENERAL INFORMATION

Building Type: ☑ Nonresidential ☐ High-Rise Residential ☐ Hotel/Motel Guest Room
☐ Schools (Public School) ☐ Relocatable Public School Bldg. ☑ Conditioned Spaces ☐ Unconditioned Spaces
☐ Skylight Area for Large Enclosed Space ≥ 8000 ft² (If checked include the ENV-4C with submittal)
Phase of Construction: ☑ New Construction ☐ Addition ☐ Alteration
Approach of Compliance: ☐ Component ☑ Overall Envelope ☐ Unconditioned (file affidavit)
Front Orientation: N, E, S, W or in Degrees: *225 deg*

FIELD INSPECTION ENERGY CHECKLIST

OPAQUE SURFACE DETAILS / **INSULATION**

Tag/ID	Assembly Type	Area (ft²)	Orientation N, E, S, W	U-Factor	Cavity R-Value	Exterior R-Value	Exterior Furring[1]	Interior R-Value	Interior Furring[1]	Joint Appendix 4	Condition Status	Pass	Fail[2]
1	*Slab*	*435*	*(N)*	*0.730*	*None*					*4.4.7-A1*	*New*	☐	☐
2	*Roof*	*435*	*(N)*	*0.043*	*R-22*					*4.2.1-A6*	*New*	☐	☐
3	*Wall*	*139*	*(SW)*	*0.570*	*None*					*4.3.6-F2*	*New*	☐	☐
4	*Door*	*21*	*(SW)*	*0.700*	*None*					*4.5.1-A2*	*New*	☐	☐
5	*Wall*	*128*	*(NE)*	*0.570*	*None*					*4.3.6-F2*	*New*	☐	☐
6	*Wall*	*242*	*(NW)*	*0.570*	*None*					*4.3.6-F2*	*New*	☐	☐
7	*Wall*	*250*	*(SE)*	*0.570*	*None*					*4.3.6-F2*	*New*	☐	☐
												☐	☐
												☐	☐
												☐	☐

1. See Instructions in the Nonresidential Compliance Manual, page 3-96.
2. If Fail, then describe on Page 2 of the Inspection Checklist Form and take appropriate action to correct. A fail does not meet compliance.

FENESTRATION SURFACE DETAILS

Tag/ID	Fenestration Type	Area (ft²)	Orientation N, E, S, W	Max U-Factor	U-Factor Source	Max (R)SHGC	SHGC Source	Overhang	Conditions Status	Pass	Fail[2]
1	*Window*	*32*	*(NE)*	*0.790*	*Default*	*0.700*	*Default*	☐	*New*	☐	☐
2	*Window*	*8*	*(NW)*	*0.790*	*Default*	*0.700*	*Default*	☐	*New*	☐	☐
								☐		☐	☐
								☐		☐	☐
								☐		☐	☐
								☐		☐	☐
								☐		☐	☐
								☐		☐	☐
								☐		☐	☐
								☐		☐	☐
								☐		☐	☐

1. See Instructions in the Nonresidential Compliance Manual, page 3-96.
2. If Fail then describe on Page 2 of the Inspection Checklist Form and take appropriate action to correct. Verify building plans if necessary.

CERTIFICATE OF COMPLIANCE AND FIELD INSPECTION ENERGY CHECKLIST (Part 2 of 3) ENV-1C

Project Name	Date
Train Operator Booth. (Env/Lighting/HVAC)	*5/29/2013*

ROOFING PRODUCT (COOL ROOFS)

(Note if the roofing product is not CRRC certified, this compliance approach cannot be used). Go to Overall Envelope Approach or Performance Approach.

CHECK APPLICABLE BOX BELOW IF EXEMPT FROM THE ROOFING PRODUCT "COOL ROOF" REQUIREMENTS:	Pass	Fail[1]	N/A
☐ Roofing compliance not required in Climate Zones 1 and16 with a Low-Sloped. 2:12 pitch or less.	☐	☐	☐
☐ Roofing compliance not required in Climate Zone 1 with a Steep-Sloped with less than 5 lb/ft². Greater than 2:12 pitch.	☐	☐	☐
☐ Low-sloped Wood framed roofs in Climate Zones 3 and 5 are exempted, solar reflectance and thermal emittance or SRI that have a U-factor of 0.039 or lower. See Opaque Surface Details roof assembly, Column H of ENV-2C.	☐	☐	☐
☐ Low-sloped Metal building roofs in Climate Zone 3 and 5 are exempted, solar relectance and thermal emittance or SRI that have a U-factor of 0.048 or lower. See Opaque Surface Details roof assembly below, Column H of ENV-2C.	☐	☐	☐
☐ The roof area covered by building integrated photovoltaic panels and building integrated solar thermal panels are exempted. Solar reflectance and thermal emittance or SRI, see spreadsheet calculator at www.energy.ca.gov/title24/	☐	☐	☐
☐ Roof constructions that have thermal mass over the roof membrane with a weight of at least 25 lb/ft² are exempt from the Cool Roof criteria below.	☐	☐	☐
☐ High-rise residential buildings and hotels and motels with low-sloped roofs in Climate Zones 1 through 9, 12 and 16 are exempted from the low-sloped roofing criteria.	☐	☐	☐

1. If Fail then describe on this page of the Inspection Checklist Form and take appropriate action to correct. Verify building plans if necessary.

CRRC Product ID Number[1]	Roof Slope ≥ 2:12	Roof Slope < 2:12	Product Weight < 5lb/ft²	Product Weight ≥ 5lb/ft²	Product Type[2]	Aged Solar Reflectance[3]	Thermal Emmitance	SRI[5]	Pass	Fail[6]
	☐	☐	☐	☐		☐ [4]			☐	☐
	☐	☐	☐	☐		☐ [4]			☐	☐
	☐	☐	☐	☐		☐ [4]			☐	☐
	☐	☐	☐	☐		☐ [4]			☐	☐
	☐	☐	☐	☐		☐ [4]			☐	☐
	☐	☐	☐	☐		☐ [4]			☐	☐

1. The CRRC Product ID Number can be obtained from the Cool Roof Rating Council's Rated Product Directory at www.coolroofs.org/products/search.php
2. Indicate the type of product is being used for the roof top, i.e. single-ply roof, asphalt roof, metal roof, etc.
3. If the Aged Reflectance is not available in the Cool Roof Rating Council's Rated Product Directory then use the Initial Reflectance value from the same directory and use the equation $(0.2+0.7(\rho_{Initial} - 0.2)$ to obtain a calculated aged value. Where ρ is the Initial Solar Reflectance from the Cool Roof Rating Council's Rated Product Directory.
4. Check box if the Aged Reflectance is a calculated value using the equation above.
5. The SRI value needs to be calculated from a spreadsheet calculator at http://www.energy.ca.gov/title24/
6. If Fail then describe on this page of the Inspection Checklist Form and take appropriate action to correct. Verify building plans if necessary.

To apply **Liquid Field Applied Coatings**, the coating must be applied across the entire roof surface and meet the dry mil thickness or coverage recommended by the coatings manufacturer and meet minimum performance requirements listed in §118(i)4. Select the applicable coating:

☐ Aluminum-Pigmented Asphalt Roof Coating ☐ Cement-Based Roof Coating ☐ Other _____

Discrepancies:

CERTIFICATE OF COMPLIANCE AND FIELD INSPECTION ENERGY CHECKLIST (Part 3 of 3) ENV-1C

Project Name	Date
Train Operator Booth. (Env/Lighting/HVAC)	*5/29/2013*

Required Acceptance Tests

Designer:
This form is to be used by the designer and attached to the plans. Listed below is the acceptance test for Envelope Fenestrations system. The designer is required to check the acceptance tests and list all the fenestration products that require an acceptance test. If all the site-built fenestration of a certain type requires a test, list the different fenestration products and the number of systems. The NA7 Section in the Appendix of the Nonresidential Reference Appendices Manual describes the test. Since this form will be part of the plans, completion of this section will allow the responsible party to budget for the scope of work appropriately.

Enforcement Agency:
Systems Acceptance. Before Occupancy Permit is granted for a newly constructed building or space or whenever new fenestration is installed in the building or space shall be certified as meeting the Acceptance Requirements.
The ENV-2A form is not considered a complete form and is not to be accepted by the enforcement agency unless the boxes are checked and/or filled and signed. In addition, a Certificate of Acceptance forms shall be submitted to the enforcement agency that certifies plans, specifications, installation certificates, and operating and maintenance information meet the requirements of §10-103(b) of Title 24 Part 6. The field inspector must receive the properly filled out and signed forms before the building can receive final occupancy. A copy of the ENV-2A for each different fenestration product line must be provided to the owner of the building for their records.

Test Description: Fenestration Products Name or ID Requiring Testing or Verification	Area of like Products	ENV-2A Building Envelope Acceptance Test	Test Performed By:
Operable Window	*40*	☑	
		☐	
		☐	
		☐	
		☐	
		☐	
		☐	
		☐	
		☐	
		☐	
		☐	
		☐	
		☐	
		☐	
		☐	
		☐	
		☐	
		☐	
		☐	
		☐	
		☐	
		☐	
		☐	
		☐	
		☐	
		☐	
		☐	
		☐	
		☐	
		☐	

SRJV
JUN 24 2013
ISSUED FOR CONSTRUCTION

C:\projectwise\p0\projectwise\intl\suero\dms55397\expo2-ET-S7-002.dwg
18-Jun-13 11:19 AM Suero, Carmen

THE PREPARATION OF THIS DRAWING HAS BEEN FINANCED BY THE TAXES OF THE CITIZENS OF LOS ANGELES COUNTY AND OF THE STATE OF CALIFORNIA.

REV	DATE	BY	APP	REG NO	EXPIRES	SEAL HOLDER	DESCRIPTION
0	5/30/13	CS					APPROVED FOR CONSTRUCTION

DESIGNED BY J. TRAUTMANN
DRAWN BY C. SUERO
CHECKED BY J. JACOBSEN
IN CHARGE P. TUCCILLO
DATE 5/30/13

LICENSED ARCHITECT JOHN P. TRAUTMANN No. C21914 Exp. 08-31-13 ARCHITECTURAL STATE OF CALIFORNIA

Exposition Metro Line Construction Authority
Expo
Exposition Construction Authority Approved for Construction Drawings - APC
JUN 21 2013
PARSONS BRINCKERHOFF
EXPO SKANSKA RADOS
444 South Flower Street
Suite 2200
Los Angeles, CA 90071
TEL (213) 443-7463
FAX (213) 362-9481
CURRENT STATUS

EXPOSITION LRT PROJECT- PHASE 2
COLORADO/ 4TH ST STATION
TITLE 24
TOS BOOTH ENV/HVAC/LIGHTING CALCS
SHEET 2 OF 6

CONTRACT NO XP8902-002
DRAWING NO ET-S7-002 REV 0
SCALE NONE
SHEET NO

C:\projectwise\pb\projectwiseint\suero\dms55397\expo2-ET-S7-003.dwg

CERTIFICATE OF COMPLIANCE (Part 1 of 3) LTG-1C

Project Name: *Train Operator Booth. (Env/Lighting/HVAC)* — Date: *5/29/2013*

INDOOR LIGHTING SCHEDULE and FIELD INSPECTION ENERGY CHECKLIST

Installation Certificate, LTG-1- INST (Retain a copy and verify form is completed and signed.) — **Field Inspector** ☐

Certificate of Acceptance, LTG-2A and LTG-3A (Retain a copy and verify form is completed and signed.) — **Field Inspector** ☐

A separate Lighting Schedule Must Be Filled Out for Conditioned and Unconditioned Spaces Installed Lighting Power listed on this Lighting Schedule is only for:

☑ **CONDITIONED SPACE** ☐ **UNCONDITIONED SPACE**

☑ The actual indoor lighting power listed below includes all installed permanent and portable lighting systems in accordance with §146(a).

☑ Only for offices: Up to the first 0.2 watts per square foot of portable lighting shall not be required to be included in the calculation of actual indoor lighting power density in accordance with the Exception to §146(a). All portable lighting in excess of 0.2 watts per square foot is totaled below.

	Luminaire (Type, Lamps, Ballasts)		Installed Watts						
A	B	C	D	E		F	G	H	
				How wattage Was determined				Field Inspector[2]	
None or Item Tag	Complete Luminaire Description[1] (i.e, 3 lamp fluorescent troffer, F32T8, one dimmable electronic ballasts)		Watts per Luminaire[1]	CEC Default From NA8	According To §130 (d or e)	Number of Luminaires	Installed Watts (D X F)	Pass	Fail
S-1	*S-1 Fixture (1x4 1 lamp fluor)*		*40.0*	☐	☑	*2*	*80*	☐	☐
S-1a	*S-1a Fixture (2x4 3 lamp fluor)*		*80.0*	☐	☑	*3*	*240*	☐	☐
				☐	☐			☐	☐
				☐	☐			☐	☐
				☐	☐			☐	☐
				☐	☐			☐	☐
				☐	☐			☐	☐
				☐	☐			☐	☐
				☐	☐			☐	☐
				☐	☐			☐	☐
				☐	☐			☐	☐
				☐	☐			☐	☐
				☐	☐			☐	☐
				☐	☐			☐	☐
				☐	☐			☐	☐
				☐	☐			☐	☐
				☐	☐			☐	☐
				☐	☐			☐	☐
				☐	☐			☐	☐
				☐	☐			☐	☐
						Installed Watts Page Total:	*320*		
Building total number of pages:						Installed Watts Building Total (Sum of all pages)			
						Enter into LTG-1C Page 4 of 4	*320*		

1. Wattage shall be determined according to Section 130 (d and e). Wattage shall be rating of light fixture, not rating of bulb.
2. If Fail then describe on Page 2 of the Inspection Checklist Form and take appropriate action to correct. Verify building plans if necessary.

CERTIFICATE OF COMPLIANCE (Part 2 of 3) LTG-1C

Project Name: *Train Operator Booth. (Env/Lighting/HVAC)* — Date: *5/29/2013*

INDOOR LIGHTING SCHEDULE and FIELD INSPECTION ENERGY CHECKLIST

Fill in controls for all spaces: a) area controls, b) multi-level controls, c) manual daylighting controls for daylit areas > 250 ft^2, automatic daylighting controls for daylit areas > 2,500 ft^2, d) shut-off controls, e) display lighting controls, f) tailored lighting controls – general lighting controlled separately from display, ornamental and display case lighting and g) demand responsive automatic controls for retail stores > 50,000 ft^2, in accordance with Section 131.

MANDATORY LIGHTING CONTROLS – FIELD INSPECTION ENERGY CHECKLIST

Type/ Description	Number of Units	Location in Building	Special Features	Field Inspector Pass	Field Inspector Fail
			☐	☐	☐
			☐	☐	☐
			☐	☐	☐
			☐	☐	☐
			☐	☐	☐
			☐	☐	☐
			☐	☐	☐
			☐	☐	☐
			☐	☐	☐
			☐	☐	☐
			☐	☐	☐
			☐	☐	☐
			☐	☐	☐
			☐	☐	☐
			☐	☐	☐
			☐	☐	☐
			☐	☐	☐
			☐	☐	☐
			☐	☐	☐
			☐	☐	☐
			☐	☐	☐
			☐	☐	☐
			☐	☐	☐
			☐	☐	☐

SPECIAL FEATURES INSPECTION CHECKLIST (See Page 2 of 4 of LTG-1C)

The local enforcement agency should pay special attention to the items specified in this checklist. These items require special written justification and documentation, and special verification. The local enforcement agency determines the adequacy of the justification, and may reject a building or design that otherwise complies based on the adequacy of the special justification and documentation submitted.

Field Inspector's Notes or Discrepancies:

CERTIFICATE OF COMPLIANCE (Part 3 of 3) LTG-1C

Project Name: *Train Operator Booth. (Env/Lighting/HVAC)* — Date: *5/29/2013*

CONDITIONED AND UNCONDITIONED SPACE LIGHTING MUST NOT BE COMBINED FOR COMPLIANCE

Indoor Lighting Power for Conditioned Spaces		Watts	Indoor Lighting Power for Unconditioned Spaces		Watts
Installed Lighting (from Conditioned LTG-1C, Page 2)		*320*	**Installed** Lighting (from Unconditioned LTG-1C, Page 2)		*0*
Lighting Control Credit Conditioned Spaces (from LTG-2C)	-	*0*	Lighting Control Credit Unconditioned Spaces (from LTG-2C)	-	*0*
Adjusted **Installed** Lighting Power	=	*320*	Adjusted **Installed** Lighting Power	=	*0*
Complies if **Installed ≤ Allowed**		↕	Complies if **Installed ≤ Allowed**		↕
Allowed Lighting Power Conditioned Spaces (from LTG-3C or PERF-1)		*320*	**Allowed** Lighting Power Unconditioned Spaces (from LTG-3C)		*0*

Required Acceptance Tests

Designer:

This form is to be used by the designer and attached to the plans. Listed below is the acceptance test for the Lighting system, **LTG-2A and LTG-3A**. The designer is required to check the acceptance tests and list all control devices serving the building or space shall be certified as meeting the Acceptance Requirements for Code Compliance. If all the lighting system or control of a certain type requires a test, list the different lighting and the number of systems. The NA7 Section in the Appendix of the Nonresidential Reference Appendices Manual describes the test. Since this form will be part of the plans, completion of this section will allow the responsible party to budget for the scope of work appropriately. **Forms can be grouped by type of Luminaire controlled.**

Enforcement Agency:

Systems Acceptance. Before Occupancy Permit is granted for a newly constructed building or space or when ever new lighting system with controls is installed in the building or space shall be certified as meeting the Acceptance Requirements.
The **LTG-2A and LTG-3A** forms are not considered complete forms and are not to be accepted by the enforcement agency unless the boxes are checked and/or filled and signed. In addition, a Certificate of Acceptance forms shall be submitted to the enforcement agency that certifies plans, specifications, installation certificates, and operating and maintenance information meet the requirements of §10-103(b) of Title 24 Part 6. The field inspector must receive the properly filled out and signed forms before the building can receive final occupancy. A copy of the **LTG-2A and LTG-3A** for each different lighting luminaire control(s) must be provided to the owner of the building for their records.

Luminaires Controlled				LTG-2A and LTG-3A
Equipment Requiring Testing	Description	Number of Luminaires controlled	Location	Controls and Sensors and Automatic Daylighting Controls Acceptance
				☐
				☐
				☐
				☐
				☐
				☐
				☐
				☐
				☐
				☐
				☐
				☐
				☐
				☐
				☐
				☐

SRJV
JUN 24 2013
ISSUED FOR CONSTRUCTION

THE PREPARATION OF THIS DRAWING HAS BEEN FINANCED BY THE TAXES OF THE CITIZENS OF LOS ANGELES COUNTY AND OF THE STATE OF CALIFORNIA.

REV	DATE	BY	APP	REG NO	EXPIRES	SEAL HOLDER	DESCRIPTION
0	5/30/13	CS					APPROVED FOR CONSTRUCTION

DESIGNED BY: J. TRAUTMANN
DRAWN BY: C. SUERO
CHECKED BY: J. JACOBSEN
IN CHARGE: P. TUCCILLO
DATE: 5/30/13

LICENSED ARCHITECT — JOHN P. TRAUTMANN — No. C21914 — Exp. 08-31-13 — ARCHITECTURAL — STATE OF CALIFORNIA

Exposition Metro Line Construction Authority
Expo
Exposition Construction Authority
Approved for Construction
Drawings - AFC

EXPO SKANSKA RADOS
444 South Flower Street
Suite 2200
Los Angeles, CA 90071
TEL (213) 443-7463
FAX (213) 362-9481

PARSONS BRINCKERHOFF JUN 21 2013

CURRENT STATUS

EXPOSITION LRT PROJECT- PHASE 2
COLORADO/ 4TH ST STATION
TITLE 24
TOS BOOTH ENV/HVAC/LIGHTING CALCS
SHEET 3 OF 6

CONTRACT NO: XP8902-002
DRAWING NO: ET-S7-003
REV: 0
SCALE: NONE
SHEET NO:

Suero, Carmen 11:20 AM 18-Jun-13

CERTIFICATE OF COMPLIANCE (Part 3 of 3) LTG-1C

Project Name	Date
Train Operator Booth. (Env/Lighting/HVAC)	*5/29/2013*

CONDITIONED AND UNCONDITIONED SPACE LIGHTING MUST NOT BE COMBINED FOR COMPLIANCE

Indoor Lighting Power for Conditioned Spaces		Watts	Indoor Lighting Power for Unconditioned Spaces		Watts
Installed Lighting (from Conditioned LTG-1C, Page 2)		320	**Installed** Lighting (from Unconditioned LTG-1C, Page 2)		0
Lighting Control Credit Conditioned Spaces (from LTG-2C)	-	0	Lighting Control Credit Unconditioned Spaces (from LTG-2C)	-	0
Adjusted **Installed** Lighting Power	=	320	Adjusted **Installed** Lighting Power	=	0
Complies if **Installed ≤ Allowed**		↕	Complies if **Installed ≤ Allowed**		↕
Allowed Lighting Power Conditioned Spaces (from LTG-3C or PERF-1)		320	**Allowed** Lighting Power Unconditioned Spaces (from LTG-3C)		0

Required Acceptance Tests

Designer:

This form is to be used by the designer and attached to the plans. Listed below is the acceptance test for the Lighting system, **LTG-2A and LTG-3A**. The designer is required to check the acceptance tests and list all control devices serving the building or space shall be certified as meeting the Acceptance Requirements for Code Compliance. If all the lighting system or control of a certain type requires a test, list the different lighting and the number of systems. The NA7 Section in the Appendix of the Nonresidential Reference Appendices Manual describes the test. Since this form will be part of the plans, completion of this section will allow the responsible party to budget for the scope of work appropriately. **Forms can be grouped by type of Luminaire controlled.**

Enforcement Agency:

Systems Acceptance: Before Occupancy Permit is granted for a newly constructed building or space or when ever new lighting system with controls is installed in the building or space shall be certified as meeting the Acceptance Requirements.
The **LTG-2A and LTG-3A** forms are not considered complete forms and are not to be accepted by the enforcement agency unless the boxes are checked and/or filled and signed. In addition, a Certificate of Acceptance forms shall be submitted to the enforcement agency that certifies plans, specifications, installation certificates, and operating and maintenance information meet the requirements of §10-103(b) of Title 24 Part 6. The field inspector must receive the properly filled out and signed forms before the building can receive final occupancy. A copy of the **LTG-2A and LTG-3A** for each different lighting luminaire control(s) must be provided to the owner of the building for their records.

Luminaires Controlled				LTG-2A and LTG-3A
Equipment Requiring Testing	Description	Number of Luminaires controlled	Location	Controls and Sensors and Automatic Daylighting Controls Acceptance
				☐
				☐
				☐
				☐
				☐
				☐
				☐
				☐
				☐
				☐
				☐
				☐
				☐
				☐
				☐
				☐

CERTIFICATE OF COMPLIANCE and FIELD INSPECTION ENERGY CHECKLIST (Part 1 of 4) MECH-1C

Project Name	Date
Train Operator Booth. (Env/Lighting/HVAC)	*5/29/2013*

Project Address	Climate Zone	Total Cond. Floor Area	Addition Floor Area
Colorado @ 4th Street Santa Monica	*6*	*435*	*n/a*

GENERAL INFORMATION

Building Type:	☑ Nonresidential	☐ High-Rise Residential	☐ Hotel/Motel Guest Room
☐ Schools (Public School)	☐ Relocatable Public School Bldg.	☑ Conditioned Spaces	☐ Unconditioned Spaces (affidavit)
Phase of Construction:	☑ New Construction	☐ Addition	☐ Alteration
Approach of Compliance:	☐ Component	☐ Overall Envelope TDV Energy	☐ Unconditioned (file affidavit)
Front Orientation: N, E, S, W or in Degrees:	*225 deg*		

HVAC SYSTEM DETAILS

Equipment[2]	Inspection Criteria	FIELD INSPECTION ENERGY CHECKLIST Meets Criteria or Requirements: Pass	Fail – Describe Reason[2]
Item or System Tags (i.e. AC-1, RTU-1, HP-1)	*PTHP-1 Unit*	☐	☐
Equipment Type[3]:	*Room PTAC*	☐	☐
Number of Systems	*1*	☐	☐
Max Allowed Heating Capacity[1]	*13,900 Btu/hr*	☐	☐
Minimum Heating Efficiency[1]	*3.30 COP*	☐	☐
Max Allowed Cooling Capacity[1]	*14,600 Btu/hr*	☐	☐
Cooling Efficiency[1]	*11.2 EER*	☐	☐
Duct Location/ R-Value	*Attic, Ceiling Ins, vented / 4.2*	☐	☐
When duct testing is required, submit **MECH-4A** & **MECH-4-HERS**	*No*	☐	☐
Economizer	*No Economizer*	☐	☐
Thermostat	*No Setback Required*	☐	☐
Fan Control	*Constant Volume*	☐	☐

Equipment[2]	Inspection Criteria	FIELD INSPECTION ENERGY CHECKLIST Pass	Fail – Describe Reason[2]
Item or System Tags (i.e. AC-1, RTU-1, HP-1)		☐	☐
Equipment Type[3]:		☐	☐
Number of Systems		☐	☐
Max Allowed Heating Capacity[1]		☐	☐
Minimum Heating Efficiency[1]		☐	☐
Max Allowed Cooling Capacity[1]		☐	☐
Cooling Efficiency[1]		☐	☐
Duct Location/ R-Value		☐	☐
When duct testing is required, submit **MECH-4A** & **MECH-4-HERS**		☐	☐
Economizer		☐	☐
Thermostat		☐	☐
Fan Control		☐	☐

1. If the Actual installed equipment performance efficiency and capacity is less than the Proposed (from the energy compliance submittal or from the building plans) the responsible party shall resubmit energy compliance to include the new changes.
2. For additional detailed discrepancy use Page 2 of the Inspection Checklist Form. Compliance fails if a Fail box is checked.
3. Indicate Equipment Type: Gas (Pkg or, Split), VAV, HP (Pkg or split), Hydronic, PTAC, or other.

CERTIFICATE OF COMPLIANCE and FIELD INSPECTION ENERGY CHECKLIST (Part 2 of 4) MECH-1C

Project Name	Date
Train Operator Booth. (Env/Lighting/HVAC)	*5/29/2013*

Discrepancies:

SRJV
JUN 24 2013
ISSUED FOR CONSTRUCTION

THE PREPARATION OF THIS DRAWING HAS BEEN FINANCED BY THE TAXES OF THE CITIZENS OF LOS ANGELES COUNTY AND OF THE STATE OF CALIFORNIA.

REV	DATE	BY	APP	REG NO	EXPIRES	SEAL HOLDER	DESCRIPTION
0	5/30/13	CS					APPROVED FOR CONSTRUCTION

DESIGNED BY J. TRAUTMANN
DRAWN BY C. SUERO
CHECKED BY J. JACOBSEN
IN CHARGE P. TUCCILLO
DATE 5/30/13

LICENSED ARCHITECT JOHN P. TRAUTMANN No. C21914 Exp. 08-31-13 ARCHITECTURAL STATE OF CALIFORNIA

Exposition Metro Line Construction Authority
Expo
Exposition Construction Authority Approved for Construction Drawings - AFC
EXPO SKANSKA RADOS
444 South Flower Street Suite 2200 Los Angeles, CA 90071 TEL (213) 443-7463 FAX (213) 362-9481
PARSONS BRINCKERHOFF JUN 21 2013
CURRENT STATUS

EXPOSITION LRT PROJECT- PHASE 2
COLORADO/ 4TH ST STATION
TITLE 24
TOS BOOTH ENV/HVAC/LIGHTING CALCS
SHEET 4 OF 6

CONTRACT NO XP8902-002
DRAWING NO ET-S7-004 REV 0
SCALE NONE
SHEET NO

C:\projectwise\pb\projectwise\ifsuero\dms55397\expo2-ET-S7-004.dwg
Suero, Carmen 11:22 AM 18-Jun-13

C:\projectwise\pb\projectwiseint\suero\dms55397\expo2-ET-S7-005.dwg

AIR SYSTEM REQUIREMENTS (Part 1 of 2) MECH-2C

Project Name: *Train Operator Booth. (Env/Lighting/HVAC)* — Date: *5/29/2013*

Item or System Tags (i.e. AC-1, RTU-1, HP-1)	Indicate Air Systems Type (Central, Single Zone, Package, VAV, or etc...)			
Item or System Tags (i.e. AC-1, RTU-1, HP-1)		*PTHP-1 Unit*		
Number of Systems		*1*		
	Indicate Page Reference on Plans or Schedule and indicate the applicable exception(s)			
MANDATORY MEASURES	**T-24 Sections**			
Heating Equipment Efficiency	112(a)	*3.30 COP*		
Cooling Equipment Efficiency	112(a)	*11.2 EER*		
HVAC Heat Pump Thermostat	112(b), 112(c)	*Yes*		
Furnace Controls/Thermostat	112(c), 115(a)	*n/a*		
Natural Ventilation	121(b)	*Yes*		
Mechanical Ventilation	121(b)	*75 cfm*		
VAV Minimum Position Control	121(c)	*No*		
Demand Control Ventilation	121(c)	*No*		
Time Control	122(e)	*Programmable Switch*		
Setback and Setup Control	122(e)	*No Setback Required*		
Outdoor Damper Control	122(f)	*Auto*		
Isolation Zones	122(g)	*n/a*		
Pipe Insulation	123			
Duct Location/ R-value	124	*Attic, Ceiling Ins, vented / 4.2*		
PRESCRIPTIVE MEASURES				
Calculated Design Heating Load	144(a & b)	*n/a*		
Proposed Heating Capacity	144(a & b)	*22,127 Btu/hr*		
Calculated Design Cooling Load	144(a & b)	*n/a*		
Proposed Cooling Capacity	144(a & b)	*15,198 Btu/hr*		
Fan Control	144(c)	*Constant Volume*		
DP Sensor Location	144(c)			
Supply Pressure Reset (DDC only)	144(c)	*Yes*		
Simultaneous Heat/Cool	144(d)	*No*		
Economizer	144(e)	*No Economizer*		
Heat Air Supply Reset	144(f)	*Constant Temp*		
Cool Air Supply Reset	144(f)	*Constant Temp*		
Electric Resistance Heating[1]	144(g)			
Air Cooled Chiller Limitation	144(i)			
Duct Leakage Sealing. If Yes, a MECH-4-A must be submitted	144(k)	*No*		

1. Total installed capacity (MBtu/hr) of all electric heat on this project exclusive of electric auxiliary heat for heat pumps. If electric heat is used explain which exception(s) to §144(g) apply.

MECHANICAL EQUIPMENT DETAILS (Part 1 of 2) MECH-5C

Project Name: *Train Operator Booth. (Env/Lighting/HVAC)* — Date: *5/29/2013*

CHILLER AND TOWER SUMMARY

Equipment Name	Type	Qty.	Efficiency	Tons	PUMPS Qty.	GPM	BHP	Pump Control

DHW / BOILER SUMMARY

System Name	Type	Distribution	Qty.	Rated Input	Vol. (Gals).	Energy Factor or RE	Standby Loss or Pilot	Tank Ext. R-Value	Status

MULTI-FAMILY CENTRAL WATER HEATING DETAILS

Control	Hot Water Pump Qty.	HP	Type	Hot Water Piping Length (ft) In Plenum	Outside	Buried	Add ½" Insulation
							☐
							☐
							☐

CENTRAL SYSTEM RATINGS

System Name	Type	Qty.	HEATING Output	Aux. kW	Efficiency	COOLING Output	Efficiency	Status
PTHP-1 (GE AZ61H5D)	*Room PTAC*	*1*	*13,900*	*3.0*	*3.30 COP*	*14,600*	*11.2 EER*	*New*

CENTRAL SYSTEM FAN SUMMARY

System Name	Fan Type	Economizer Type	SUPPLY FAN CFM	BHP	RETURN FAN CFM	BHP
PTHP-1 (GE AZ61H5D)	*Constant Volume*	*No Economizer*	*300*	*0.15*	*none*	

MECHANICAL VENTILATION AND REHEAT MECH-3C

Project Name: *Train Operator Booth. (Env/Lighting/HVAC)* — Date: *5/29/2013*

MECHANICAL VENTILATION (§121(b)2) / REHEAT LIMITATION (§144(d))

A	B	C	D	E	F	G	H	I	J	K	L	M	N
	AREA BASIS			OCCUPANCY BASIS					VAV MINIMUM				
Zone/System	Condition Area (ft^2)	CFM per ft^2	Min CFM By Area B X C	Number Of People	CFM per Person	Min CFM by Occupant E X F	REQ'D V.A. Max of D or G	Design Ventilation Air CFM	50% of Design Zone Supply CFM	B X 0.4 CFM / ft^2	Max. of Columns H, J, K, 300 CFM	Design Minimum Air Setpoint	Transfer Air
Train Operators Booth	*435*	*0.15*	*65*	*5.0*	*15.0*	*75*	*75*	*75*					
PTHP-1 Unit						*Total*	*75*	*75*					
					Totals				Column I Total Design Ventilation Air				

C	Minimum ventilation rate per Section §121, Table 121-A.
E	Based on fixed seat or the greater of the expected number of occupants and 50% of the CBC occupant load for egress purposes for spaces without fixed seating.
H	Required Ventilation Air (REQ'D V.A.) is the larger of the ventilation rates calculated on an AREA BASIS or OCCUPANCY BASIS (Column D or G).
I	Must be greater than or equal to H, or use Transfer Air (column N) to make up the difference.
J	Design fan supply CFM (Fan CFM) x 50%; or the design zone outdoor airflow rate per §121.
K	Condition area (ft^2) x 0.4 CFM / ft^2; or
L	Maximum of Columns H, J, K, or 300 CFM
M	This must be less than or equal to Column L and greater than or equal to the sum of Columns H plus N.
N	Transfer Air must be provided where the Required Ventilation Air (Column H) is greater than the Design Minimum Air (Column M). Where required, transfer air must be greater than or equal to the difference between the Required Ventilation Air (Column H) and the Design Minimum Air (Column M), Column H minus M.

MECHANICAL EQUIPMENT DETAILS (Part 2 of 2) MECH-5C

Project Name: *Train Operator Booth. (Env/Lighting/HVAC)* — Date: *5/29/2013*

ZONE SYSTEM SUMMARY

Zone Name	System Name	SYSTEM Type	Qty.	Heating	Cooling	VAV Min CFM Ratio	Reheat Coil	Fan CFM	BHP	Fan Cycles	ECM Motor	Outside Air
										☐	☐	
										☐	☐	
										☐	☐	
										☐	☐	
										☐	☐	
										☐	☐	
										☐	☐	
										☐	☐	
										☐	☐	
										☐	☐	
										☐	☐	
										☐	☐	
										☐	☐	
										☐	☐	
										☐	☐	
										☐	☐	
										☐	☐	
										☐	☐	
										☐	☐	
										☐	☐	

EXHAUST FAN SUMMARY

EXHAUST FAN Room Name	Qty.	CFM	BHP	EXHAUST FAN Room Name	Qty.	CFM	BHP	EXHAUST FAN Room Name	Qty.	CFM	BHP
Train Operators Booth	*1.0*	*75*	*0.15*								

SRJV
JUN 24 2013
ISSUED FOR CONSTRUCTION

THE PREPARATION OF THIS DRAWING HAS BEEN FINANCED BY THE TAXES OF THE CITIZENS OF LOS ANGELES COUNTY AND OF THE STATE OF CALIFORNIA.

REV	DATE	BY	APP	REG NO	EXPIRES	SEAL HOLDER	DESCRIPTION
0	5/30/13	CS					APPROVED FOR CONSTRUCTION

DESIGNED BY J. TRAUTMANN
DRAWN BY C. SUERO
CHECKED BY J. JACOBSEN
IN CHARGE P. TUCCILLO
DATE 5/30/13

LICENSED ARCHITECT
JOHN P. TRAUTMANN
No. C21914
Exp. 08-31-13
ARCHITECTURAL
STATE OF CALIFORNIA

Exposition Metro Line Construction Authority
Expo
Exposition Construction Authority
Approved for Construction
Drawings - AFC

EXPO SKANSKA RADOS
444 South Flower Street
Suite 2200
Los Angeles, CA 90071
TEL (213) 443-7463
FAX (213) 362-9481

PARSONS BRINCKERHOFF JUN 21 2013
CURRENT STATUS

EXPOSITION LRT PROJECT- PHASE 2
COLORADO/ 4TH ST STATION
TITLE 24
TOS BOOTH ENV/HVAC/LIGHTING CALCS
SHEET 5 OF 6

CONTRACT NO XP8902-002
DRAWING NO ET-S7-005
REV 0
SCALE NONE
SHEET NO

Suero, Carmen 11:24 AM 18-Jun-13

C:\projectwise\pb\projectwiseint\suero\dms55397\expo2-ET-S7-006.dwg

ENVELOPE MANDATORY MEASURES: NONRESIDENTIAL — ENV-MM

Project Name	Date
Train Operator Booth. (Env/Lighting/HVAC)	*5/29/2013*

DESCRIPTION

Building Envelope Measures:

§118(a):	Installed insulating material shall have been certified by the manufacturer to comply with the California Quality Standards for insulating material, Title 20 Chapter 4, Article 3.
§118(c):	All Insulating Materials shall be installed in compliance with the flame spread rating and smoke density requirements of Sections 2602 and 707 of Title 24, Part 2.
§118(f):	The opaque portions of framed demising walls in nonresidential buildings shall have insulation with an installed R-value of no less than R-13 between framing members.
§117(a):	All Exterior Joints and openings in the building that are observable sources of air leakage shall be caulked, gasketed, weatherstripped or otherwise sealed.
§116(a) 1:	Manufactured fenestration products and exterior doors shall have air infiltration rates not exceeding 0.3 cfm/ft.² of window area, 0.3 cfm/ft.² of door area for residential doors, 0.3 cfm/ft.² of door area for nonresidential single doors (swinging and sliding), and 1.0 cfm/ft.² for nonresidential double doors (swinging).
§116(a) 2:	Fenestration U-factor shall be rated in accordance with NFRC 100, or the applicable default U-factor.
§116(a) 3:	Fenestration SHGC shall be rated in accordance with NFRC 200, or NFRC 100 for site-built fenestration, or the applicable default SHGC.
§116(b):	Site Constructed Doors, Windows and Skylights shall be caulked between the unit and the building, and shall be weatherstripped (except for unframed glass doors and fire doors).

CABEC California Association of Building Energy Consultants
CERTIFIED ENERGY ANALYST
Mark Madison
R08-08-302 & NR08-08-526

C|H|E|E|R|S®
Certified HERS Rater
(800) 700-0131
Mark Madison
CCN70220312

CABEC
R08-07-1879 NR08-07-3578
Mark Madison
CERTIFIED ENERGY PLANS EXAMINER
for the
2008 Title-24 Building Efficiency Standards

LIGHTING MANDATORY MEASURES: NONRESIDENTIAL — LTG-MM

Project Name	Date
Train Operator Booth. (Env/Lighting/HVAC)	*5/29/2013*

Indoor Lighting Measures:

§131(d):	**Shut-off Controls**
1.	For every floor, all interior lighting systems shall be equipped with a separate automatic control to shut off the lighting. This automatic control shall meet the requirements of Section 119 and may be an occupancy sensor, automatic time switch, or other device capable of automatically shutting off the lighting.
2.	Override for Building Lighting Shut-off: The automatic building shut-off system is provided with a manual, accessible override switch in sight of the lights. The area of override is not to exceed 5,000 square feet.
§119(h):	Automatic Control Devices Certified: All automatic control devices specified are certified, all alternate equipment shall be certified and installed as directed by the manufacturer.
§111:	Fluorescent Ballast and Luminaires Certified: All fluorescent fixtures specified for the project are certified and listed in the Directory. All installed fixtures shall be certified.
§131(a):	Individual Room/Area Controls: Each room and area in this building is equipped with a separate switch or occupancy sensor device for each area with floor-to-ceiling walls.
§131(b):	Uniform Reduction for Individual Rooms: All rooms and areas greater than 100 square feet and more than 0.8 watts per square foot of lighting load shall be controlled with bi-level switching for uniform reduction of lighting within the room.
§131(c):	Daylight Area Control: All rooms with windows and skylights that are greater than 250 square feet and that allow for the effective use of daylight in the area shall have 50% of the lamps in each daylit area controlled by a separate switch; or the effective use of daylight cannot be accomplished because the windows are continuously shaded by a building on the adjacent lot. Diagram of shading during different times of the year is included on plans.
§131(c):	Display Lighting. Display lighting shall be separately switched on circuits that are 20 amps or less.6.

Outdoor Lighting Measures:

§130(c)1:	Mandatory lighting power determination for medium base sockets without permanently installed ballasts
§132(a):	All permanently installed luminaires with lamps rated over 100 Watts either have a lamp efficacy of at least 60 lumens per Watt or are controlled by a motion sensor.
§132(b):	All Luminaires with lamps rated greater than 175 Watts in hardscape area, including parking lots, building entrances, canopies, and all outdoor sales areas meet the Cutoff Requirements.
§132(c)1:	All permanently installed outdoor lighting meets the control requirements listed.
§132(c):	Building facades, parking lots, garages, canopies, and outdoor sales areas meet the Multi-Level Lighting Requirements listed.

MECHANICAL MANDATORY MEASURES: NONRESIDENTIAL — MECH-MM

Project Name	Date
Train Operator Booth. (Env/Lighting/HVAC)	*5/29/2013*

Equipment and System Efficiencies

§111:	Any appliance for which there is a California standard established in the Appliance Efficiency Regulations will comply with the applicable standard.
§115(a):	Fan type central furnaces shall not have a pilot light.
§123:	Piping, except that conveying fluids at temperatures between 60 and 105 degrees Fahrenheit, or within HVAC equipment, shall be insulated in accordance with Standards Section 123.
§124:	Air handling duct systems shall be installed and insulated in compliance with Sections 601, 602, 603, 604, and 605 of the CMC Standards.

Controls

§122(e):	Each space conditioning system shall be installed with one of the following:
1A.	Each space conditioning system serving building types such as offices and manufacturing facilities (and all others not explicitly exempt from the requirements of Section 112 (d)) shall be installed with an automatic time switch with an accessible manual override that allows operation of the system during off-hours for up to 4 hours. The time switch shall be capable of programming different schedules for weekdays and weekends and have program backup capabilities that prevent the loss of the device's program and time setting for at least 10 hours if power is interrupted; or
1B.	An occupancy sensor to control the operating period of the system; or
1C.	A 4-hour timer that can be manually operated to control the operating period of the system.
2.	Each space conditioning system shall be installed with controls that temporarily restart and temporarily operate the system as required to maintain a setback heating and/or a setup cooling thermostat setpoint.
§122(g):	Each space conditioning system serving multiple zones with a combined conditioned floor area more than 25,000 square feet shall be provided with isolation zones. Each zone: shall not exceed 25,000 square feet; shall be provided with isolation devices, such as valves or dampers that allow the supply of heating or cooling to be setback or shut off independently of other isolation areas; and shall be controlled by a time control device as described above.
§122(c):	Thermostats shall have numeric setpoints in degrees Fahrenheit (F) and adjustable setpoint stops accessible only to authorized personnel.
§122(b):	Heat pumps shall be installed with controls to prevent electric resistance supplementary heater operation when the heating load can be met by the heat pump alone
§122(a&b):	Each space conditioning system shall be controlled by an individual thermostat that responds to temperature within the zone. Where used to control heating, the control shall be adjustable down to 55 degrees F or lower. For cooling, the control shall be adjustable up to 85 degrees F or higher. Where used for both heating and cooling, the control shall be capable of providing a deadband of at least 5 degrees F within which the supply of heating and cooling is shut off or reduced to a minimum.

Ventilation

§121(e):	Controls shall be provided to allow outside air dampers or devices to be operated at the ventilation rates as specified on these plans.
§122(f):	All gravity ventilating systems shall be provided with automatic or readily accessible manually operated dampers in all openings to the outside, except for combustion air openings.
§121(f):	Ventilation System Acceptance. Before an occupancy permit is granted for a newly constructed building or space, or a new ventilating system serving a building or space is operated for normal use, all ventilation systems serving the building or space shall be certified as meeting the Acceptance Requirements for Code Compliance

Service Water Heating Systems

§113(c)	Installation
3.	Temperature controls for public lavatories. The controls shall limit the outlet Temperature to 110°F.
2.	Circulating service water-heating systems shall have a control capable of automatically turning off the circulating pump when hot water is not required.

SRJV
JUN 24 2013
ISSUED FOR CONSTRUCT...

THE PREPARATION OF THIS DRAWING HAS BEEN FINANCED BY THE TAXES OF THE CITIZENS OF LOS ANGELES COUNTY AND OF THE STATE OF CALIFORNIA.

REV	DATE	BY	APP	REG NO	EXPIRES	SEAL HOLDER	DESCRIPTION
0	5/30/13	CS					APPROVED FOR CONSTRUCTION

DESIGNED BY J. TRAUTMANN
DRAWN BY C. SUERO
CHECKED BY J. JACOBSEN
IN CHARGE P. TUCCILLO
DATE 5/30/13

LICENSED ARCHITECT — JOHN P. TRAUTMANN — No. C21914 — Exp. 08-31-13 — ARCHITECTURAL — STATE OF CALIFORNIA

Exposition Metro Line Construction Authority
Expo
Exposition Construction Authority
Approved for Construction
Drawings - AFC

EXPO SKANSKA RADOS
444 South Flower Street
Suite 2200
Los Angeles, CA 90071
TEL (213) 443-7463
FAX (213) 362-9481

PARSONS BRINCKERHOFF JUN 21 2013

CURRENT STATUS

EXPOSITION LRT PROJECT- PHASE 2
COLORADO/ 4TH ST STATION
TITLE 24
TOS BOOTH ENV/HVAC/LIGHTING CALCS
SHEET 6 OF 6

CONTRACT NO XP8902-002
DRAWING NO ET-S7-006 — REV 0
SCALE NONE
SHEET NO

Suero, Carmen 11:26 AM 18-Jun-13